

spring 2015

Robert Abbey, Inc.





Table of Contents

1 DOUGHNUT
6 TIC-TAC-TOE
7 CRISPIN
8 ELENA
9 DAVE
9 CRICKET
10 ABBEY BRONZE
11 JAYNE
12 EDGAR
12 SHAOLIN
12 ARIEL
13 MILLBROOK
14 MERCURY DOUBLE GOURD
15 TRIPLE GOURD
16 DOUBLE GOURD
17 SEINE
18 BANDIT
19 MEILLEUR
21 WAVY
22 KOLEMAN
24 BEEHIVE
25 DELILAH
26 ALBERT
28 DOLLY
29 PENELOPE
31 OLIVER
32 OREN
33 HELENA
33 FREYA
33 BRONTE
33 PHOEBE
34 FREYA AL FRESCO
34 HELENA AL FRESCO
34 PHOEBE AL FRESCO
34 BRONTE AL FRESCO
35 ASTER
36 WARWICK
37 MAGELLAN
38 AIDEN
39 ANNA
40 DELTA
40 MASON
41 FRANCESCO
42 AUDREY
43 HARVEY
44 JUNE
45 ATHENA
46 PIKE
47 BLING
49 ANENOME
50 TYRONE
51 RODERICK
53 BRYCE
54 HALO
55 BRADLEY
56 KINETIC
57 JACKSON
58 FINEAS
59 WILMA
60 ADDISON
61 ASTRO
62 IRIS
63 APOLLO
64 REAL SIMPLE
66 BRUNO
68 ANT BEE
69 ALVIN
71 PORTER
72 SLOAN
73 JULIET
74 CHASE
75 AXIS
78 LUCY
80 PETRIOLO
81 ECHO
84 SATURNIA
87 LOGAN
88 ARCHER
89 WESLEY
90 MARY MCDONALD REGINE
91 ZOLTAR
92 MARY MCDONALD ANNIKA
93 MARY MCDONALD ONDINE
94 MARY MCDONALD LEOPOLD
95 MARY MCDONALD CYCLINDRICUS
96 MARY MCDONALD FIRENZE
97 MARY MCDONALD EMPIRE
98 MARY MCDONALD DIRECTOIRE
99 MARY MCDONALD SPENCE
100 MARY MCONDALD BAUDELAIRE
101 MARY MCDONALD SANTORINI
102 WILTON
103 MARY MCDONALD PYTHAGORAS
104 BINARY
105 EDWIN
106 TRENTON
107 SOFIA
108 MAX
109 COLONNADE
110 GODDESS
111 MUSE
112 ANDRE
112 WELLS
113 GLASS HARRIET
114 ARTEMIS
115 COLE
116 BLAKE
118 KATE
119 GOSSAMER
120 LATITUDE
122 ALICE
123 AXIOM
124 WONTON
125 DELANY
126 MONROE
127 BEAUX ARTS
128 LAURELTON
129 FOUNDRY
130 ARTWORK BY MICHELLE OXENBERG
131 RICO ESPINET PLATO
132 RICO ESPINET BUSTER GLOBE
133 RICO ESPINET TYLER GLOBE
134 RICO ESPINET SCOUT
135 RICO ESPINET CHURCHILL
136 RICO ESPINET ADIRONDACK
137 RICO ESPINET OLINDA
138 RICO ESPINET TATU
139 RICO ESPINET MARINA
140 RICO ESPINET LUA VESSEL
141 RICO ESPINET NOVA
142 RICO ESPINET CASPIAN
144 RICO ESPINET NINA
145 RICO ESPINET OVO
146 RICO ESPINET BUSTER
148 RICO ESPINET CANDELARIA
149 RICO ESPINET MILES
150 RICO ESPINET CANDELA
151 RICO ESPINET SAWYER
153 RICO ESPINET VAUX
154 RICO ESPINET SHINTO
155 JONATHAN ADLER MEURICE
162 JONATHAN ADLER PARKER
165 JONATHAN ADLER VENTANA
168 JONATHAN ADLER CLARIDGE
169 JONATHAN ADLER HAVANA
171 JONATHAN ADLER IPANEMA
172 JONATHAN ADLER BRISTOL
173 JONATHAN ADLER SPUTNIK
174 JONATHAN ADLER MAYFAIR
175 JONATHAN ADLER CERAMIC
176 JONATHAN ADLER CAPRI
178 JONATHAN ADLER MILANO
179 JONATHAN ADLER ANTWERP
180 JONATHAN ADLER RIO
183 JONATHAN ADLER OJAI
184 JONATHAN ADLER HARLEQUIN
185 JONATHAN ADLER CANAAN
186 JONATHAN ADLER ST. GERMAIN
187 JONATHAN ADLER BARCELONA
188 JONATHAN ADLER VIENNA
189 WILLIAMSBURG MING
190 WILLIAMSBURG TUCKER
191 WILLIAMSBURG NELSON
192 WILLIAMSBURG DUNMORE
193 WILLIAMSBURG WYTHE
194 WILLIAMSBURG TAYLOE
195 WILLIAMSBURG CUSTIS
196 WILLIAMSBURG BLAIKLEY
197 WILLIAMSBURG WENTWORTH
198 WILLIAMSBURG LIGHTFOOT
199 WILLIAMSBURG DICKINSON
200 WILLIAMSBURG RANDOLPH
201 WILLIAMSBURG LUDWELL
202 BULBS
203 DOUBLE GOURD CHART
204 TRIPLE GOURD CHART
205 AUDREY CHART
205 DELILAH CHART
206 HARVEY CHART
207 DELTA CHART
207 MASON CHART
208 JUNE CHART
209 PIKE CHART
210 ATHENA CHART
211 TABLE LAMPS
240 FLOOR LAMPS
253 WALL SCONCES
265 WALL SWINGERS
268 FLUSH MOUNTS
272 PENDANTS
281 CHANDELIERS
287 ACCESSORIES
290 INDEX
295 TERMS AND CONDITIONS

Doughnut



103XBN



102XBZ

Doughnut

DOUGHNUT

102XBZ

Duncan Table Lamp

1 - 150W Max.
Bulb Type: A
Switch: 3-Way
Deep Patina Bronze Finish
Ebony Finished Wood Base
Rectangular Snowflake Fabric Shade

FINISH OPTIONS:
100XBN Natural Brass
101XAS Antique Silver

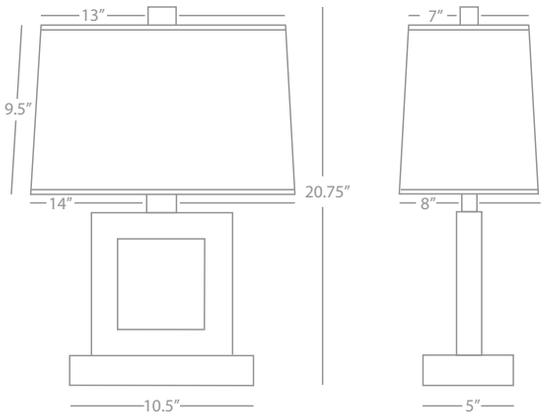

DOUGHNUT

103XBN

Jerry Table Lamp

1 - 150W Max.
Bulb Type: A
Switch: 3-Way
Natural Brass Finish
Ebony Finished Wood Base
Rectangular Snowflake Fabric Shade

FINISH OPTIONS:
104XAS Antique Silver
105XBZ Deep Patina Bronze

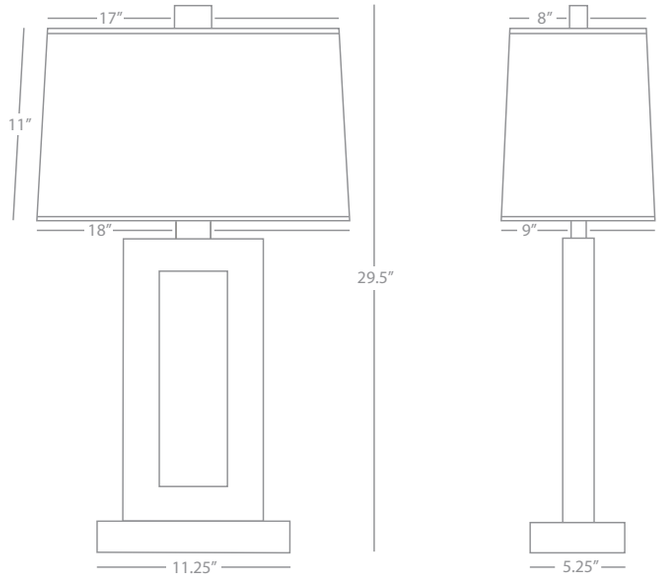

Doughnut



139



S152

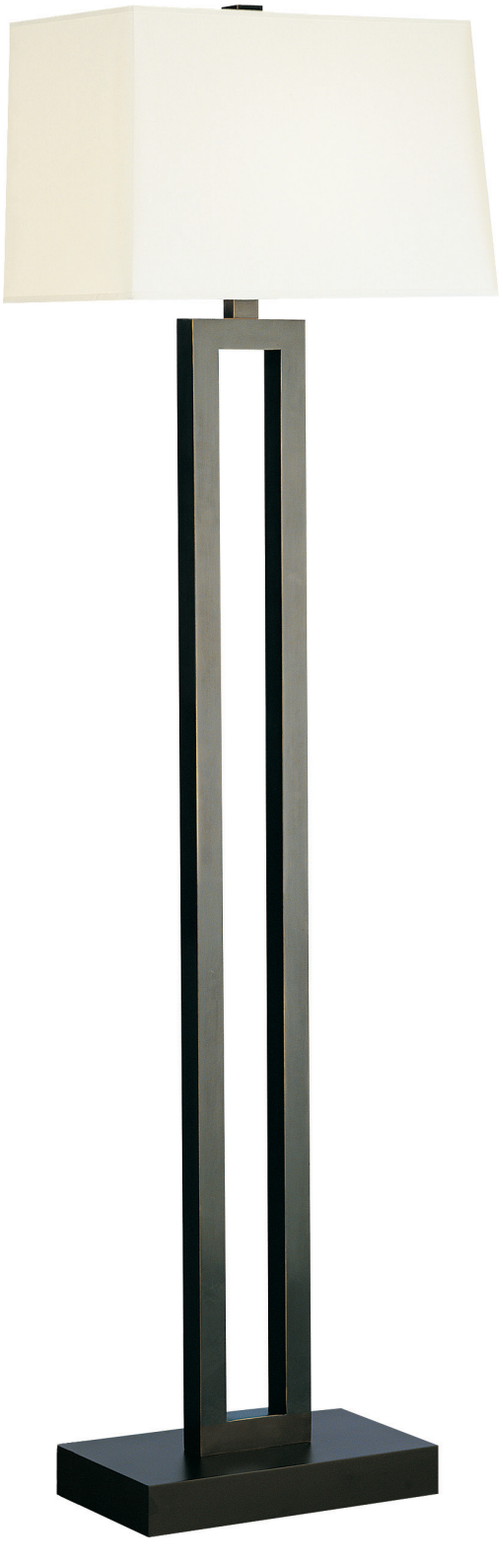

107X

Doughnut

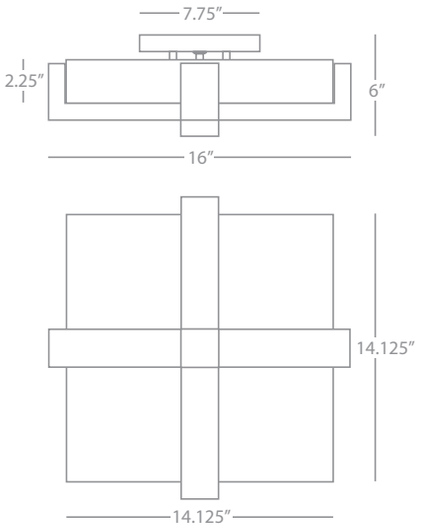

DOUGHNUT

139

Flush Mount

2 - 60W Max.
Bulb Type: T-10 Medium Base
Direct Wire Only
Natural Brass Finish
Marbleized Glass Shade

FINISH OPTIONS:
S139 Antique Silver
Z139 Deep Patina Bronze

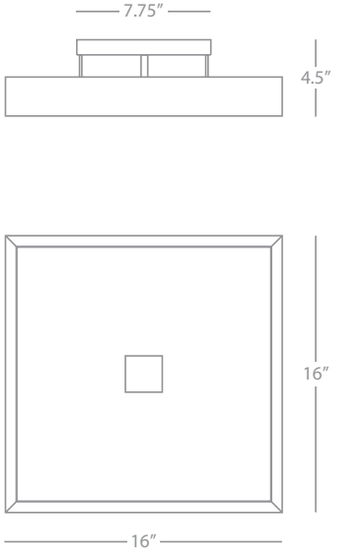

DOUGHNUT

S152

Nouveau Flush Mount

2 - 60W Max.
Bulb Type: T10 Medium Base
Direct Wire Only
Antique Silver Finish
Marbleized Glass Shade

FINISH OPTION:
Z152 Deep Patina Bronze

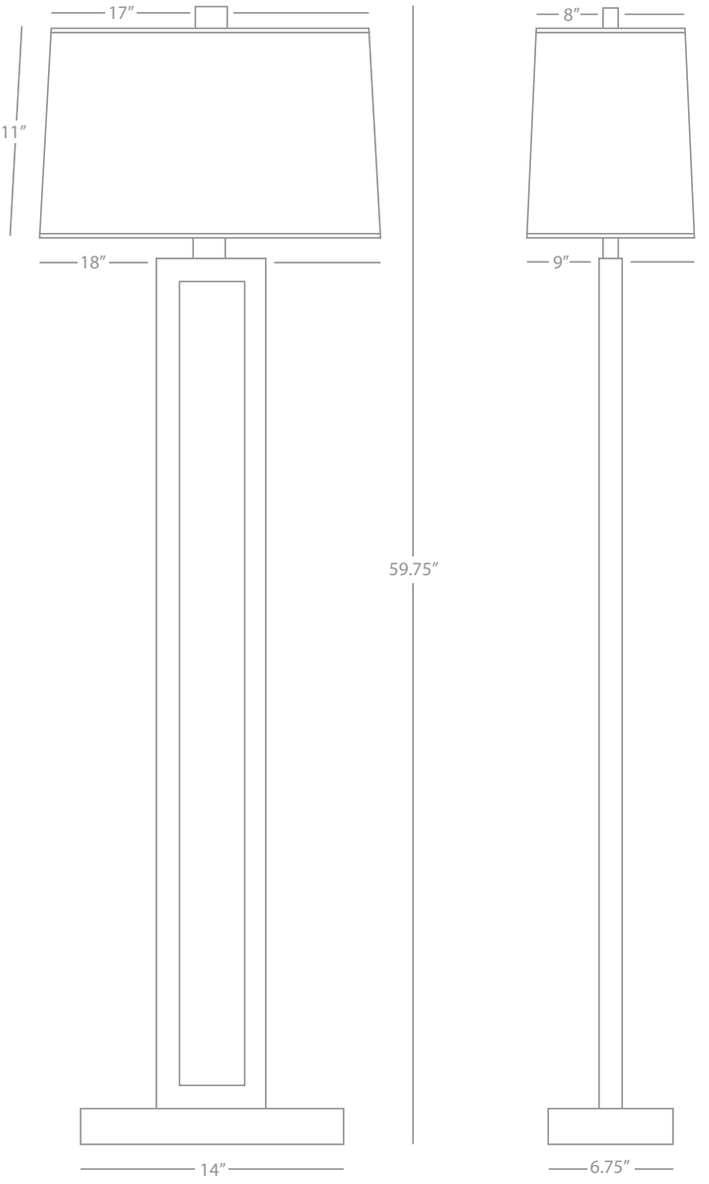

DOUGHNUT

107X

Floor Lamp

1 - 150W Max.
Bulb Type: A
Switch: 3-Way
Deep Patina Bronze Finish
Ebony Finished Wood Base
Rectangular Snowflake Fabric Shade

FINISH OPTIONS:
106X Natural Brass
108X Antique Silver



Z149



142



147

Doughnut

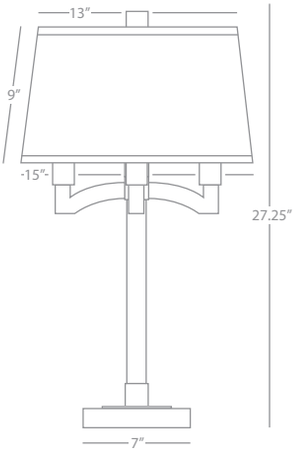

DOUGHNUT

142
4-Arm Table Lamp

4 - 60W Max.
Bulb Type: A
Switch: Full Range Dimmer
Deep Patina Bronze Finish
Ebony Finished Wood Base
Square Snowflake Fabric Shade

FINISH OPTION:
141 Antique Silver

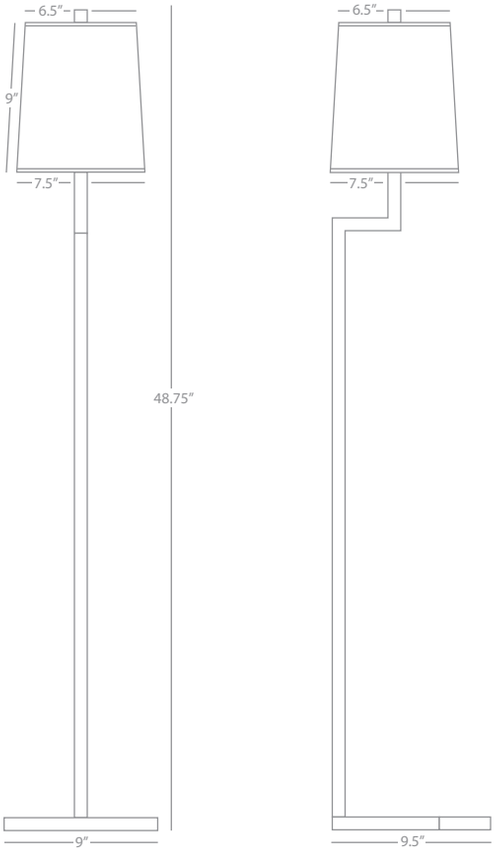

DOUGHNUT

Z149
Mini “C” Floor Lamp

1 - 100W Max.
Bulb Type: A
Switch: Full Range Dimmer
Deep Patina Bronze Finish
Square Snowflake Fabric Shade w/ Top Diffuser

FINISH OPTIONS:
149 Natural Brass
S149 Antique Silver

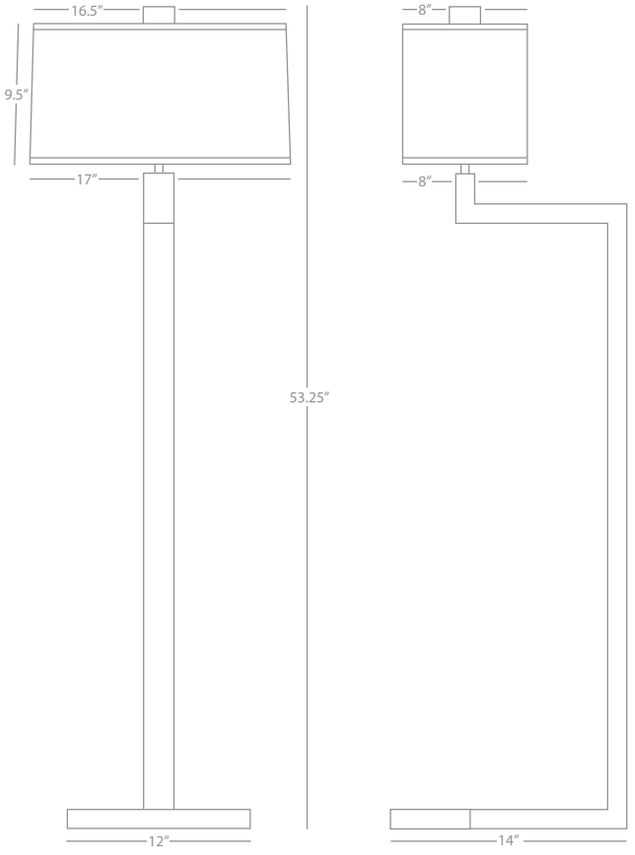

DOUGHNUT

147
“C” Floor Lamp

2 - 100W Max.
Bulb Type: A
Switch: Hi-Lo Dimming
Antique Silver Finish
Rectangular Snowflake Fabric Shade

FINISH OPTION:
148 Deep Patina Bronze

Doughnut



184



182



183



185



110X

Doughnut

DOUGHNUT

182
Single Arm Wall Sconce

1 - 60W Max.
Bulb Type: B, Candelabra
Direct Wire Only
Natural Brass Finish
Square White, Frosted, Cased Glass Shade

FINISH OPTIONS:
183 Antique Silver
184 Deep Patina Bronze
185 Polished Nickel

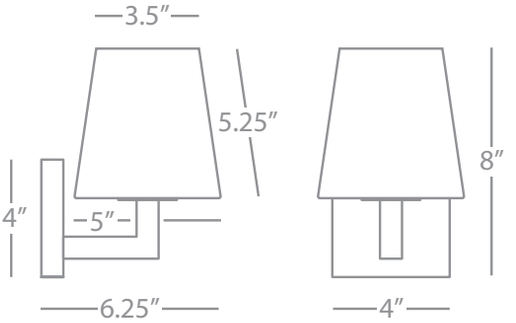

DOUGHNUT

110X
Wall Sconce

1 - 100W Max.
Bulb Type: A
Switch: 3-Way
24" Cord Cover/Direct Wire
Antique Silver Finish
Square Snowflake Fabric Shade

FINISH OPTIONS:
109X Natural Brass
111X Deep Patina Bronze

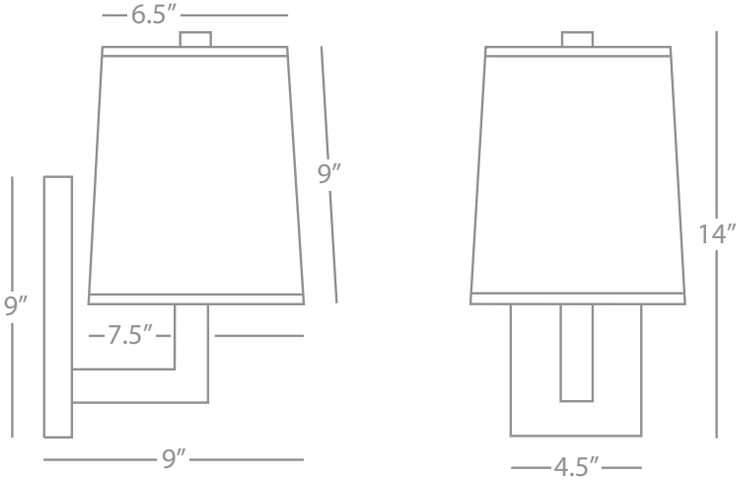



Z909



S909

Doughnut

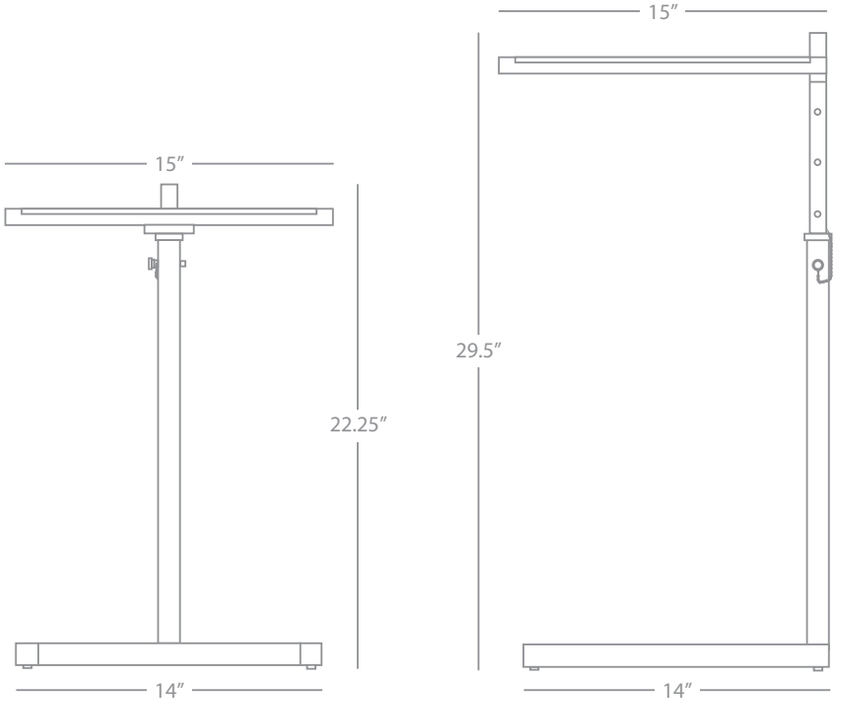

DOUGHNUT

S909
Adjustable Table

Antique Silver Finish
Smoke Tempered Glass Top

FINISH OPTION:
Z909 Deep Patina Bronze



125



123



127

Tic-Tac-Toe

TIC-TAC-TOE

125

“O” Table Lamp

1 - 150W Max.
Bulb Type: A
Switch: 3-Way
Antique Brass Finish w/ Black Marble Accents
Rectangular Pale Shell Dupioni Fabric Shade

FINISH/SHADE OPTIONS:

123	Deep Patina Bronze w/ Brown Marble Pale Shell Dupioni
127	Antique Silver w/ Black Marble Pearl Dupioni

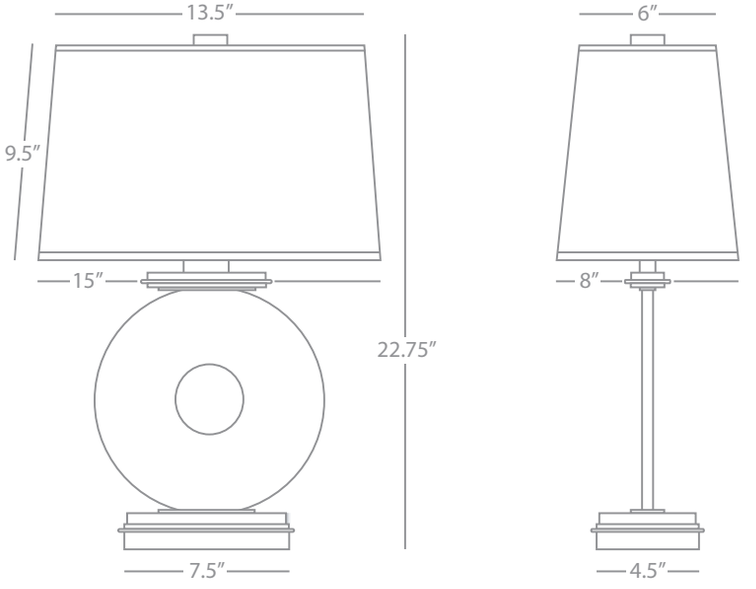



Z153

Crispin

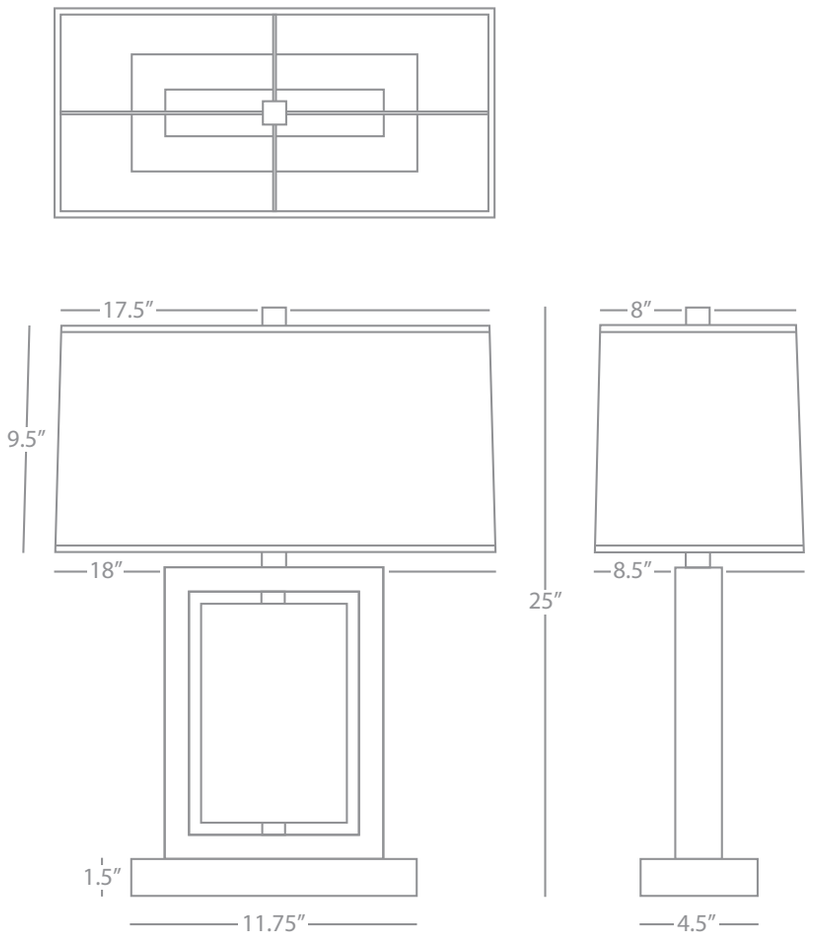

CRISPIN

Z153

Table Lamp

1 - 150W Max.
Bulb Type: A
Switch: 3-Way
Deep Patina Bronze Finish
Antique Silver Accents
Rectangular Fondine Fabric Shade



W167



B167



K168



W168



B168



K169



B169

Elena

ELENA

W167
Small Pendant

1 - 100W Max.
Bulb Type: A
Direct Wire
Pearl Dupoini Fabric Shade
Susp. Hardware: 12 Ft. White Cord

SHADE OPTIONS:
B167 Bone Dupoini
K167 Mushroom Dupoini

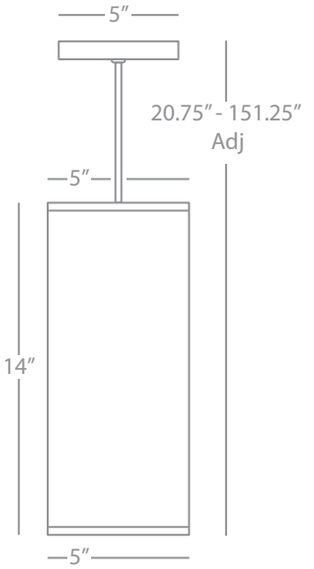

ELENA

K168
Medium Pendant

1 - 100W Max.
Bulb Type: A
Direct Wire
Mushroom Dupoini Fabric Shade
Susp. Hardware: 12 Ft. White Cord

SHADE OPTIONS:
B168 Bone Dupoini
W168 Pearl Dupoini

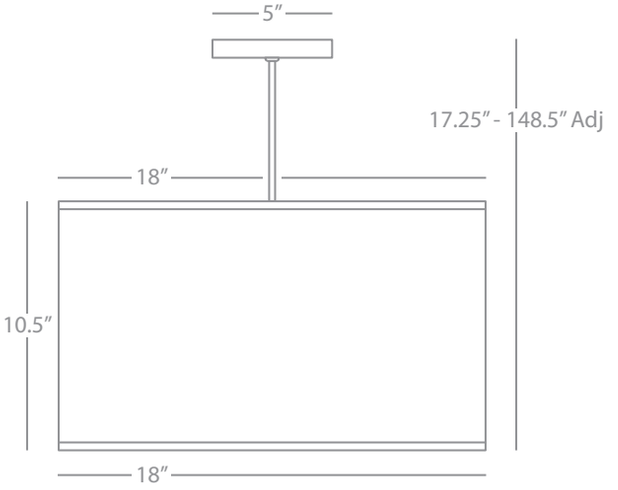

ELENA

B169
Large Pendant

1 - 100W Max.
Bulb Type: A
Direct Wire
Bone Dupoini Fabric Shade
Susp. Hardware: 12 Ft. White Cord

SHADE OPTIONS:
K169 Mushroom Dupoini
W169 Pearl Dupoini

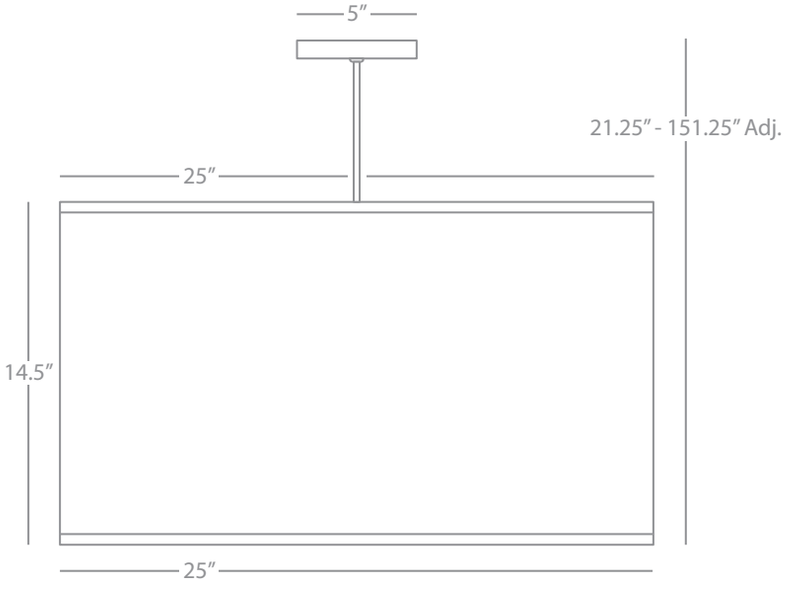



170



172

Dave



173



Z173

Cricket

Dave | Cricket

DAVE

170
Desk Lamp

1 - 60W Max.
Bulb Type: A
Switch: Hi-Lo Dimming
Polished Nickel Finish
Metal Shade

FINISH OPTION:
172 Dark Antique Nickel

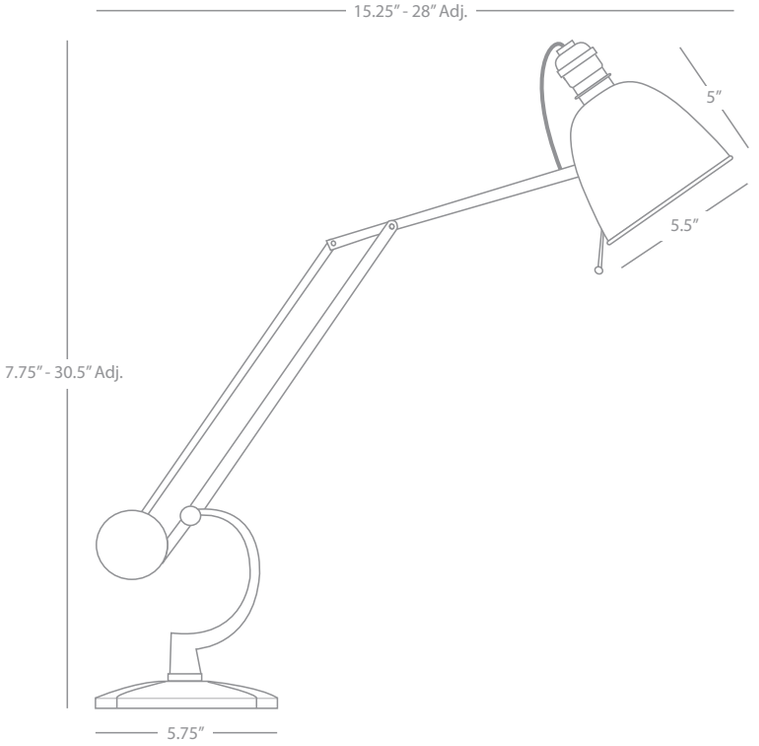

CRICKET

173
Accent Lamp

1 - 40W Max.
Bulb Type: A Torpedo
Switch: On-Off Push Thru Switch
Antique Brass Finish
Metal Shade

FINISH OPTIONS:
D173 Dark Antique Nickel
S173 Polished Nickel
Z173 Deep Patina Bronze

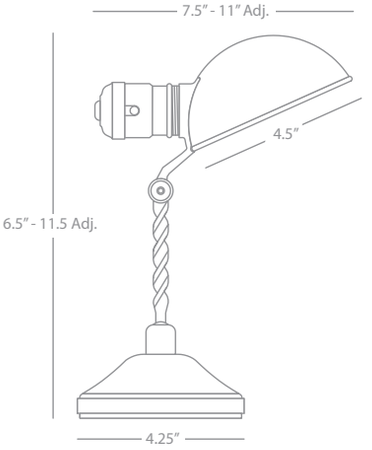

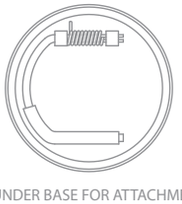

CLIP UNDER BASE FOR ATTACHMENT



L385X



L386X



L181



L180X

Abbey Bronze

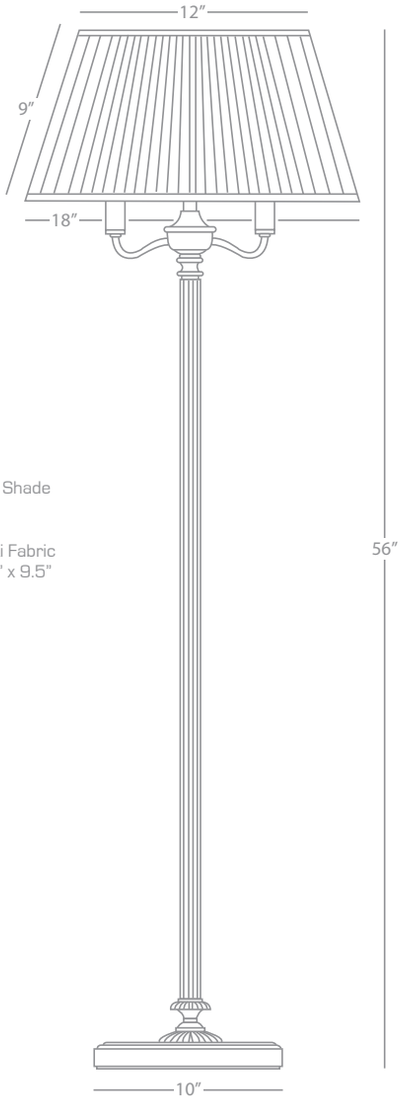

ABBEY BRONZE

L181

5-Way Floor Lamp

3 - 60W, 1 - 100W Max.
Bulb Type: A
Switch: 5-Way
Victorian Bronze Finish
Natural Crystal Pleat Fabric Shade

SHADE OPTION:
L181X Parchment Saki Fabric
Dims: 14" x 18" x 9.5"



ABBEY BRONZE

L180X

Swing Arm Floor Lamp

1 - 150W Max.
Bulb Type: A
Switch: 3-Way
Victorian Bronze Finish
Parchment Saki Fabric Shade

SHADE OPTION:
L180 Natural Crystal Pleat Fabric
Dims: 6" x 15" x 9.5"

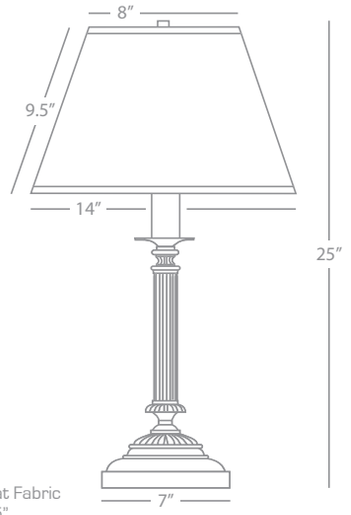

ABBEY BRONZE

L386X

Column Table Lamp

1 - 150W Max.
Bulb Type: A
Switch: 3-Way
Victorian Bronze Finish
Parchment Saki Fabric Shade

SHADE OPTION:
L386 Natural Crystal Pleat Fabric
Dims: 6" x 14" x 9.5"

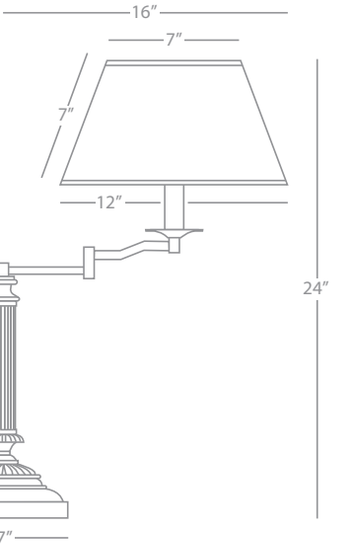

ABBEY BRONZE

L385X

Swing Arm Table Lamp

1 - 60W Max.
Bulb Type: A
Switch: On-Off
Victorian Bronze Finish
Parchment Saki Fabric Shade

SHADE OPTION:
L385 Natural Crystal Pleat Fabric
Dims: 5" x 13" x 7"



210



210BL



212BR



211RE



213X

Jayne

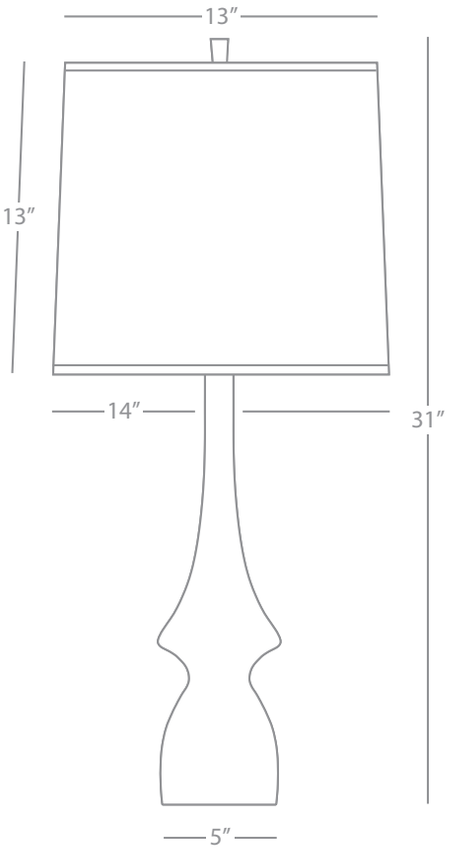

JAYNE

210

Table Lamp

1 - 150W Max.
Bulb Type: A
Switch: Full Range Dimmer
Oat Glazed Ceramic
Ascot White Fabric Drum Shade

SHADE OPTIONS:

210BL	Artichoke / Tobacco Geometric Print Linen
210BR	Tobacco / Pumpkin Geometric Print Linen
210RE	Pumpkin / Artichoke Geometric Print Linen
210X	Light Beige Linen

JAYNE

211RE

Table Lamp

1 - 150W Max.
Bulb Type: A
Switch: Full Range Dimmer
Pumpkin Glazed Ceramic
Pumpkin/Artichoke Geometric Print Linen Drum Shade

SHADE OPTIONS:

211	Ascot White Fabric
211BR	Tobacco / Pumpkin Geometric Print Linen
211X	Light Beige Linen

JAYNE

212BR

Table Lamp

1 - 150W Max.
Bulb Type: A
Switch: Full Range Dimmer
Tobacco Glazed Ceramic
Tobacco/Pumpkin Geometric Print Linen Drum Shade

SHADE OPTIONS:

212	Ascot White Fabric
212BL	Artichoke /Tobacco Geometric Print Linen
212X	Light Beige Linen

JAYNE

213X

Table Lamp

1 - 150W Max.
Bulb Type: A
Switch: Full Range Dimmer
Artichoke Glazed Ceramic
Light Beige Linen Drum Shade

SHADE OPTIONS:

213	Ascot White Fabric
213BL	Artichoke /Tobacco Geometric Print Linen
213RE	Pumpkin / Artichoke Geometric Print Linen



Edgar

230



Shaolin

214



Ariel

Shaolin | Ariel | Edgar

EDGAR

230
Table Lamp

1 - 150W Max.
Bulb Type: A
Switch: Full Range Dimmer
Lily Glazed Ceramic
Deep Patina Bronze Accents
Off-White Linen Shade
w/ Rolled Edge Hem

FINISH OPTION:
231 Celadon

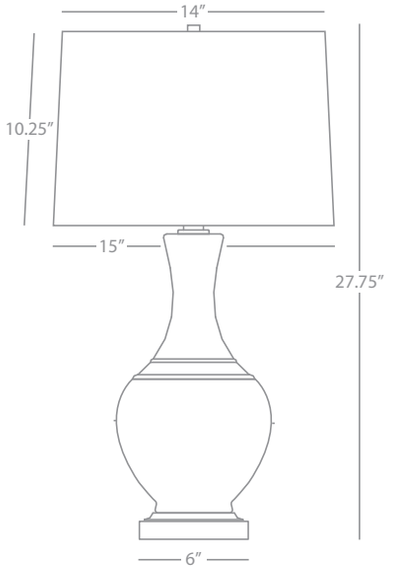

SHAOLIN

214
Table Lamp

1 - 150W Max.
Bulb Type: A
Switch: Full Range Dimmer
Lily Glazed Ceramic
Deep Patina Bronze Accents
Off-White Linen Shade

FINISH OPTION:
215 Celadon

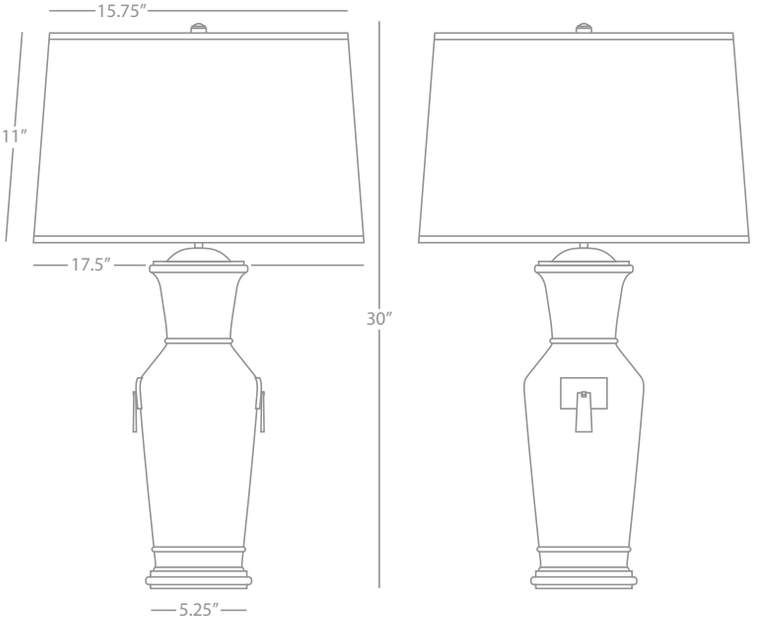

ARIEL

223
Table Lamp

1 - 150W Max.
Bulb Type: A
Switch: Full Range Dimmer
Celadon Glazed Ceramic
Deep Patina Bronze Accents
Off-White Linen Shade
w/ Rolled Edge Hem

FINISH OPTION:
222 Lily

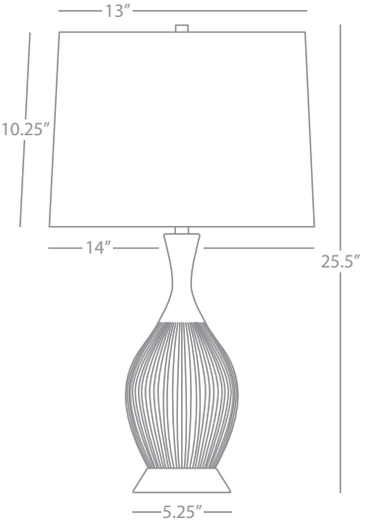



BL226



BL225



BL227

Millbrook

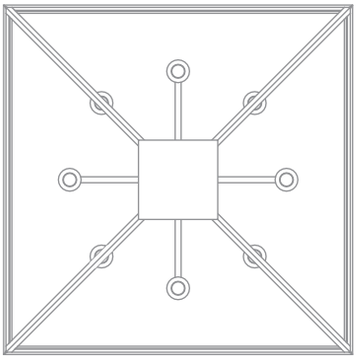

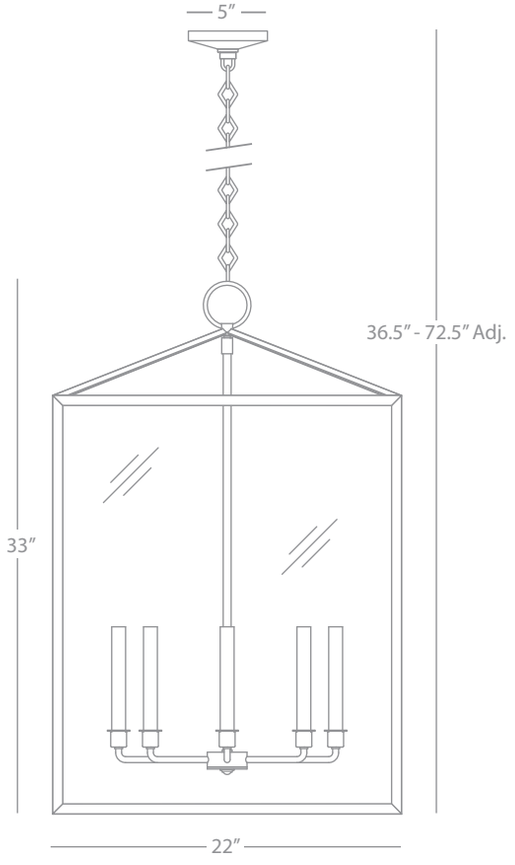

MILLBROOK

BL227

22" Rectangular Lantern

7 - 60W Max.
Bulb Type: B, Candelabra
Direct Wire Only
Matte Black Powder Coat w/Semi-Gloss
White Powder Coat Interior
4 Clear Acrylic Shade Panels
Susp. Hardware: 6 Ft. Chain

MILLBROOK

BL225

10" Rectangular Lantern

4 - 60W Max.
Bulb Type: B, Candelabra
Direct Wire Only
Matte Black Powder Coat w/Semi-Gloss
White Powder Coat Interior
4 Clear Acrylic Shade Panels
Susp. Hardware: 6 Ft. Chain

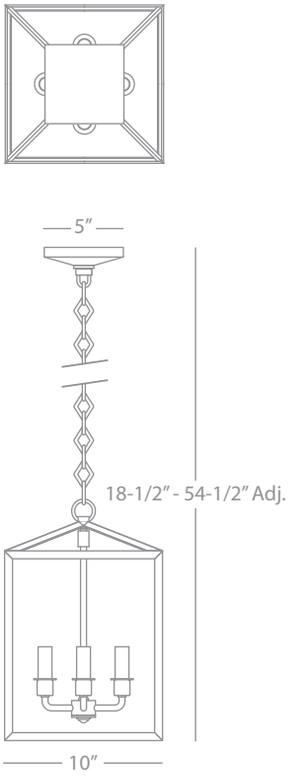

MILLBROOK

BL226

16" Rectangular Lantern

5 - 60W Max.
Bulb Type: B, Candelabra
Direct Wire Only
Matte Black Powder Coat w/Semi-Gloss
White Powder Coat Interior
4 Clear Acrylic Shade Panels
Susp. Hardware: 6 Ft. Chain

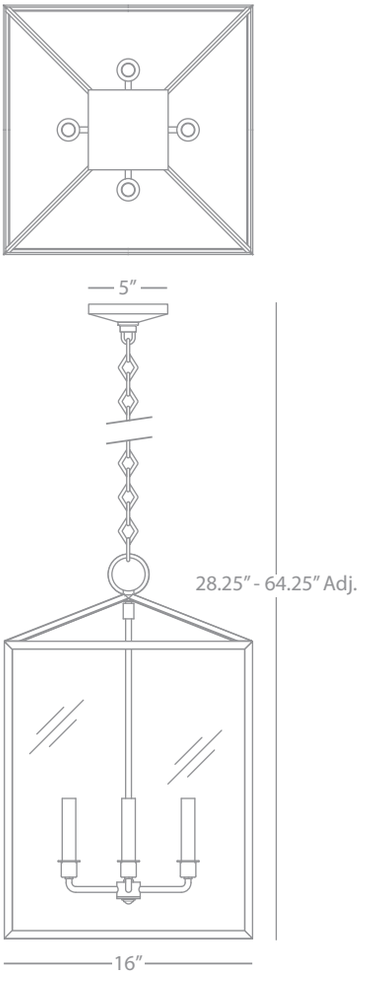

Mercury Double Gourd



236B



235

Mercury Double Gourd

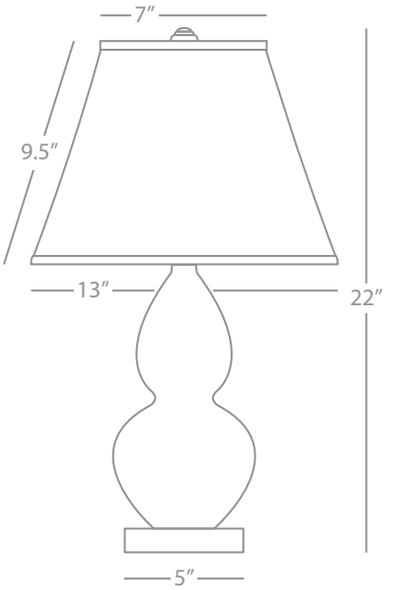

MERCURY DOUBLE GOURD

235

Accent Lamp

1 - 150W Max.
Bulb Type: A
Switch: Hi-Lo Line Switch
Mercury Glass Body
White Ceramik Parchment Shade w/
Silver Mylar Lining

SHADE OPTION:
235B Matte Black Painted Parchment
w/ Silver Mylar Lining

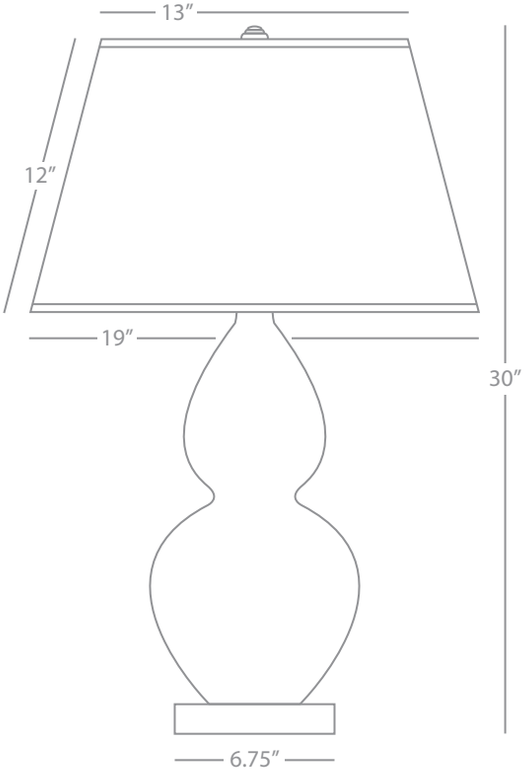

MERCURY DOUBLE GOURD

236B

Table Lamp

1 - 150W Max.
Bulb Type: A
Switch: Hi-Lo Line Switch
Mercury Glass Body
Lucite Base
Matte Black Painted Parchment Shade
w/ Silver Mylar Lining

SHADE OPTION:
236 White Ceramik Parchment
w/ Silver Mylar Lining

Triple Gourd



378X



A282X



EG31X



A368X



RR42X

Triple Gourd

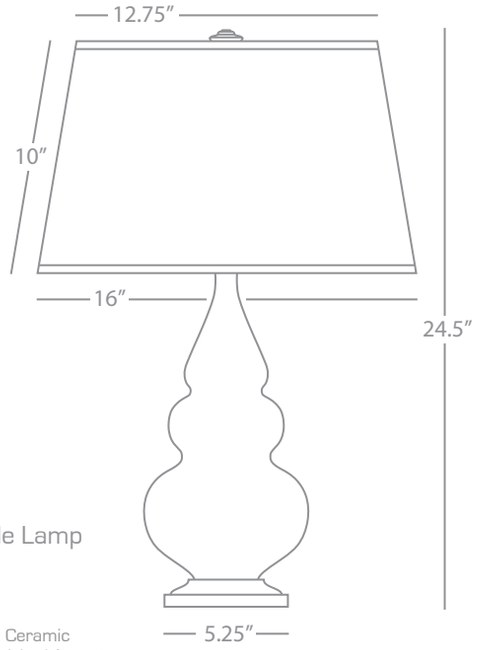

TRIPLE GOURD

378X

Accent Table Lamp

1 - 150W Max.
Bulb Type: A
Switch: 3-Way
Amethyst Glazed Ceramic
Antique Brass Finished Accents
Pearl Dupioni Fabric Shade

See Page 204 for Color/Base/Shade Options

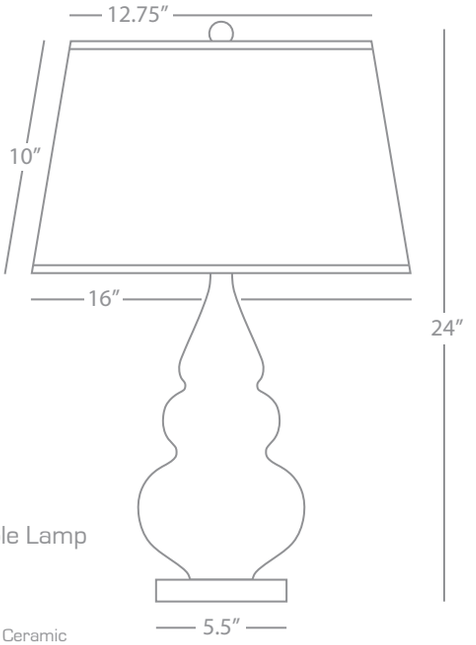

TRIPLE GOURD

A282X

Accent Table Lamp

1 - 150W Max.
Bulb Type: A
Switch: 3-Way
Pumpkin Glazed Ceramic
Square Lucite Base
Pearl Dupioni Fabric Shade

See Page 204 for Color/Base/Shade Options

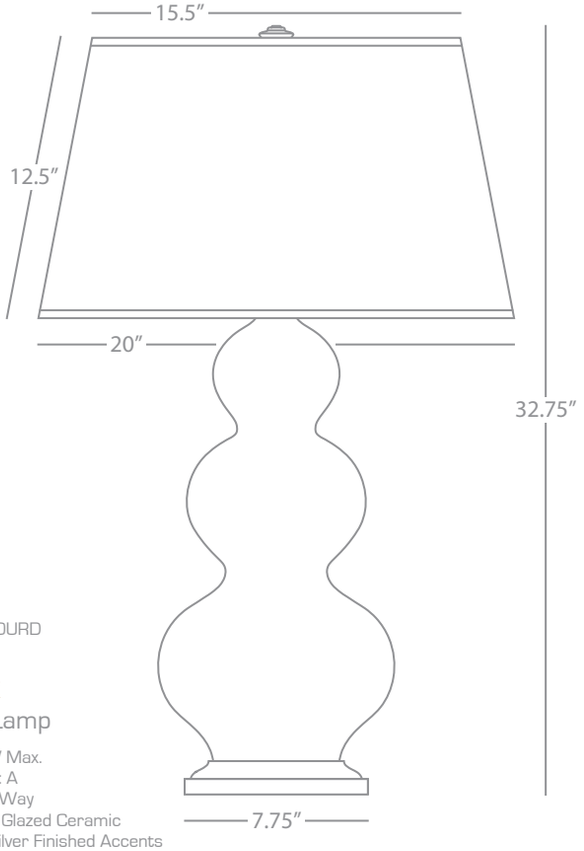

TRIPLE GOURD

RR42X

Table Lamp

1 - 150W Max.
Bulb Type: A
Switch: 3-Way
Ruby Red Glazed Ceramic
Antique Silver Finished Accents
Pearl Dupioni Fabric Shade

See Page 204 for Color/Base/Shade Options

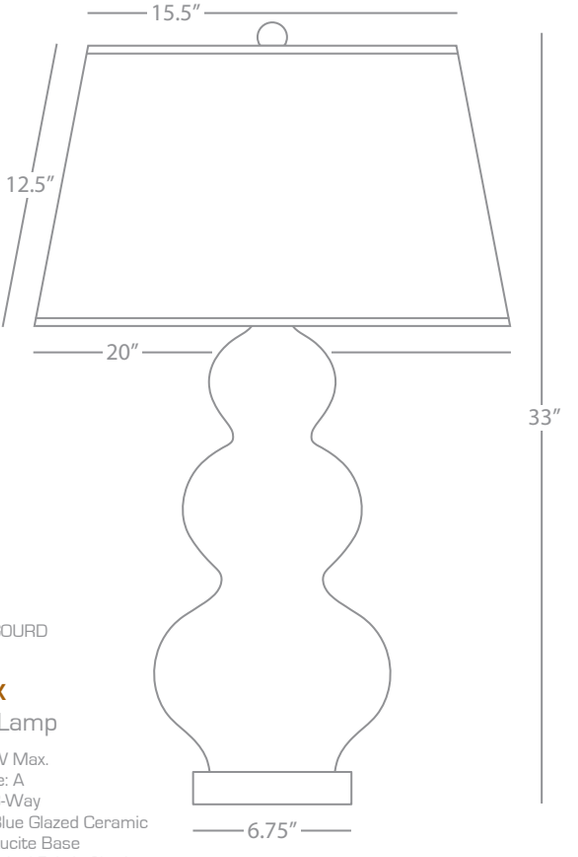

TRIPLE GOURD

A368X

Table Lamp

1 - 150W Max.
Bulb Type: A
Switch: 3-Way
Marine Blue Glazed Ceramic
Square Lucite Base
Pearl Dupioni Fabric Shade

See Page 204 for Color/Base/Shade Options

Double Gourd



1772X



1617



A770X



CF23X



1673

Double Gourd

DOUBLE GOURD

A770X

Accent Lamp

1 - 150W Max.
Bulb Type: A
Switch: 3-Way
Smokey Taupe Glazed Ceramic
Round Lucite Base
Pearl Dupioni Fabric Shade

See Page 203 for
Color/Base/Shade Options

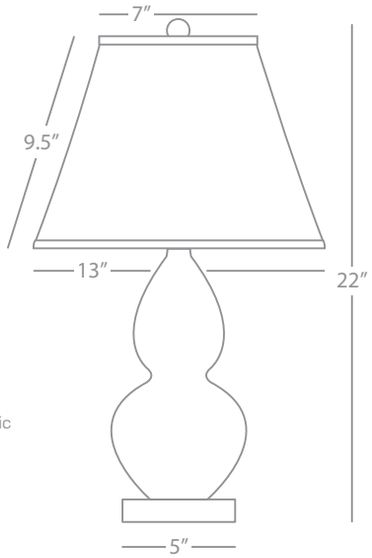

DOUBLE GOURD

1617

Accent Lamp

1 - 150W Max.
Bulb Type: A
Switch: 3-Way
Schiaparelli Pink Glazed Ceramic
Antique Brass Finished Accents
Ivory Stretched Fabric Shade

See Page 203 for
Color/Base/Shade Options

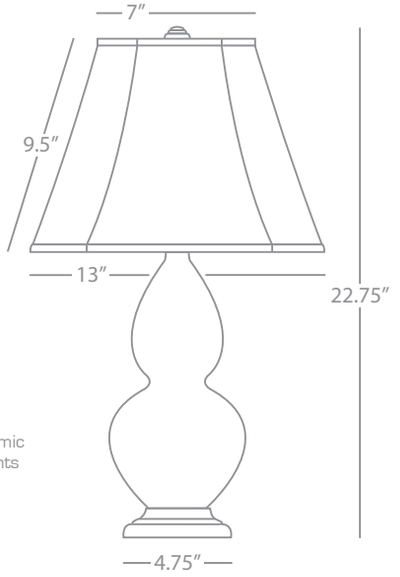

DOUBLE GOURD

1673

Table Lamp

1 - 150W Max.
Bulb Type: A
Switch: 3-Way
Apple Glazed Ceramic
Antique Silver Finished Accents
Ivory Stretched Fabric Shade

See Page 203 for
Color/Base/Shade Options

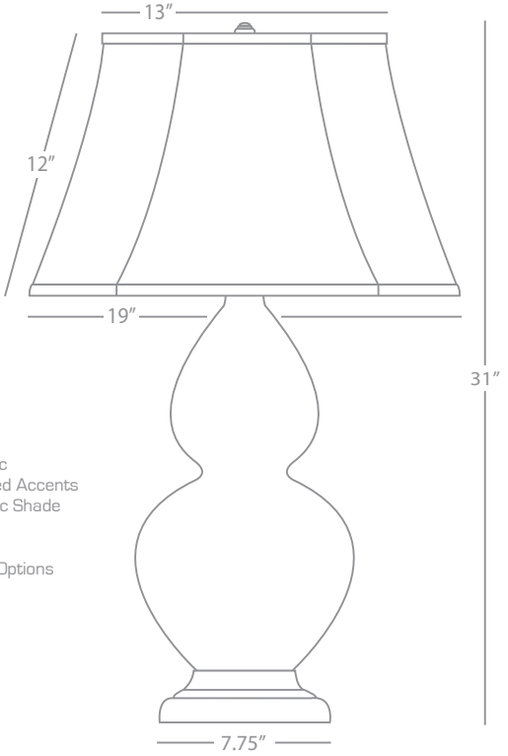

DOUBLE GOURD

CF23X

Table Lamp

1 - 150W Max.
Bulb Type: A
Switch: 3-Way
Coffee Glazed Ceramic
Round Lucite Base
Pearl Dupioni Fabric Shade

See Page 203 for
Color/Base/Shade Options

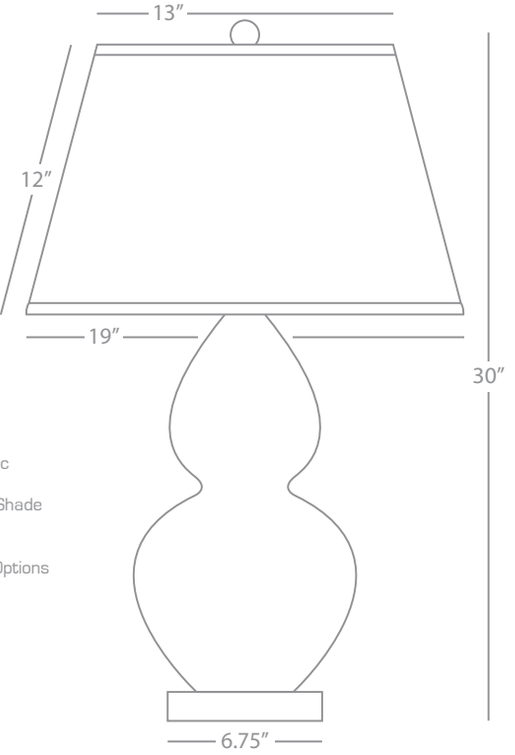



Z281



S282



280

Seine

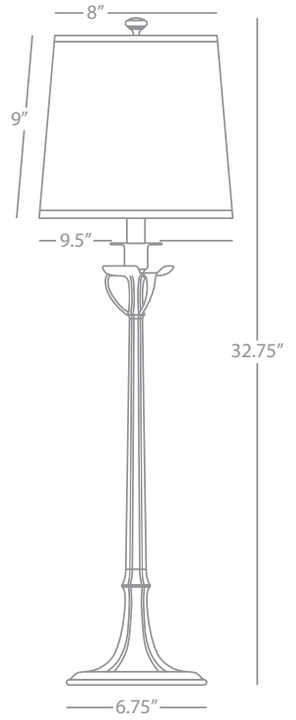

SEINE

Z281
Buffet Lamp

1 - 100W Max.
Bulb Type: A
Switch: Hi-Lo Dimming
Deep Patina Bronze Finish
Fondine Fabric Shade

FINISH/SHADE OPTIONS:
281 Aged Brass
Fondine Fabric
S281 Polished Nickel
Ascot White Fabric

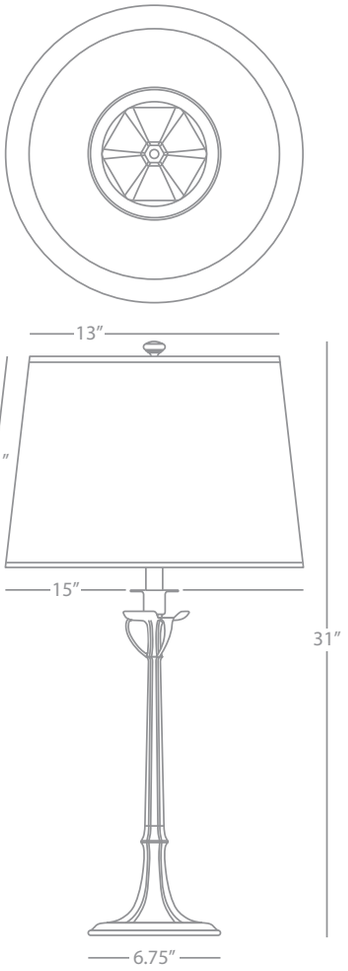

SEINE

280
Table Lamp

1 - 150W Max.
Bulb Type: A
Switch: Hi-Lo Dimming
Aged Brass Finish
Fondine Fabric Shade

FINISH/SHADE OPTIONS:
S280 Polished Nickel
Ascot White Fabric
Z280 Deep Patina Bronze
Fondine Fabric

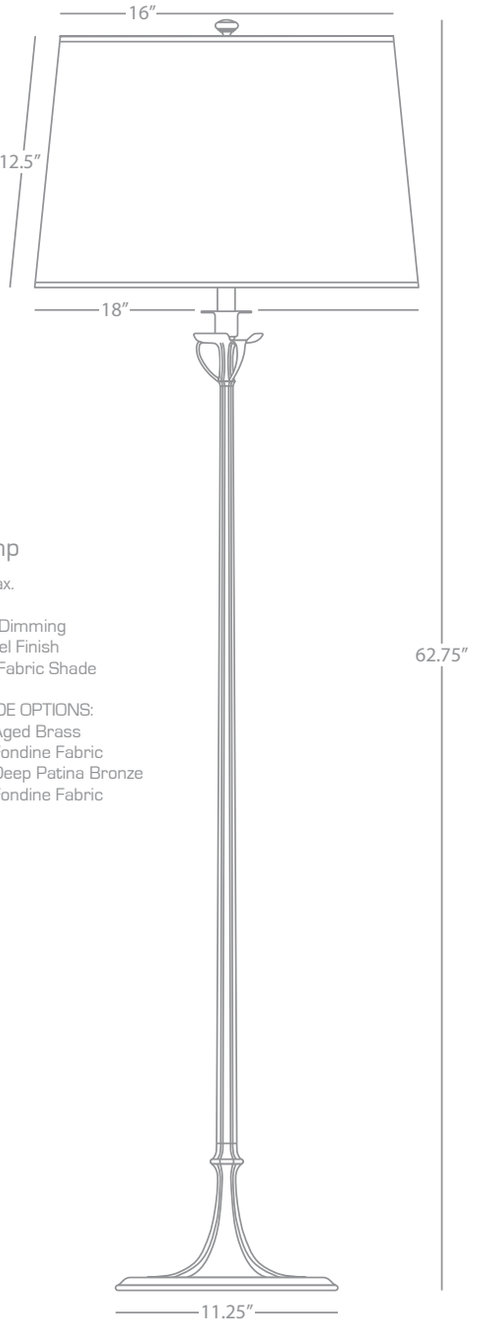

SEINE

S282
Floor Lamp

1 - 150W Max.
Bulb Type: A
Switch: Hi-Lo Dimming
Polished Nickel Finish
Ascot White Fabric Shade

FINISH/SHADE OPTIONS:
282 Aged Brass
Fondine Fabric
Z282 Deep Patina Bronze
Fondine Fabric



Z348



S349



S347

Bandit

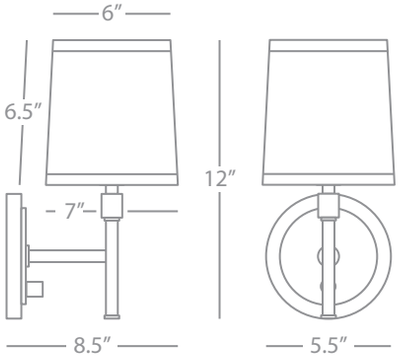

BANDIT

S349

Wall Sconce

1 - 60W Max.
Bulb Type: B, Candelabra
Switch: Hi-Lo Dimming
24" Cord Cover/Direct Wire
Polished Nickel Finish
Oyster Linen Shade

FINISH OPTION:
Z349 Deep Patina Bronze

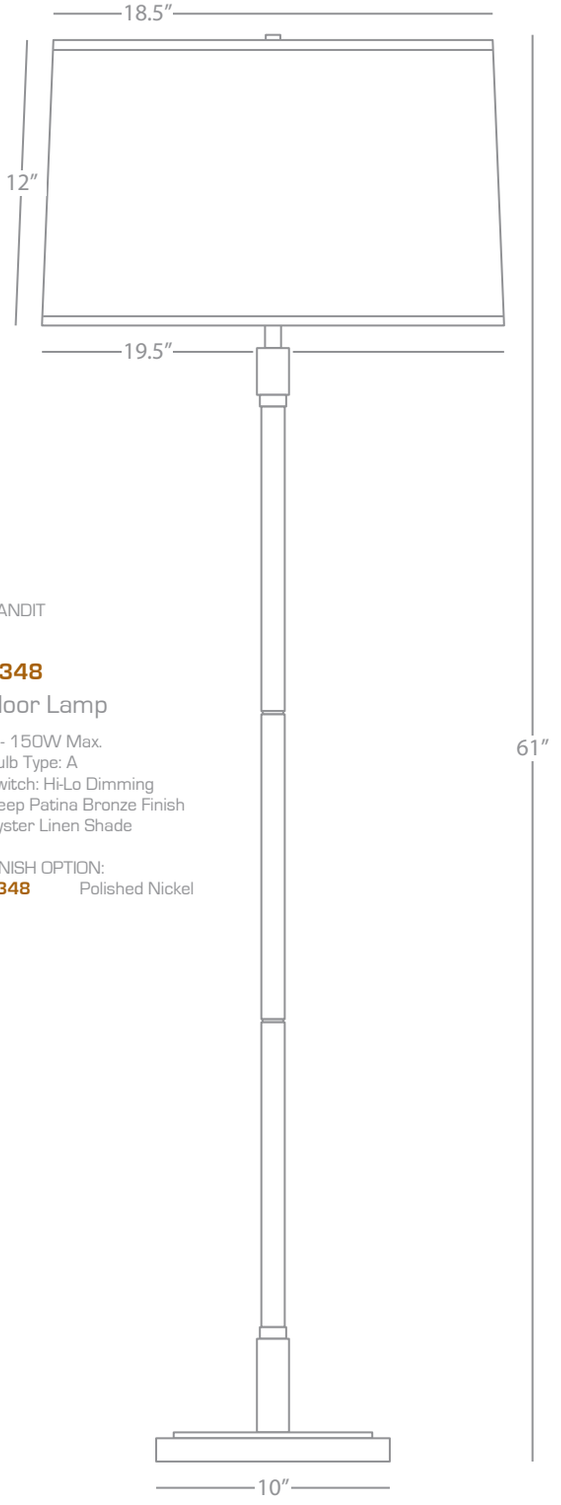

BANDIT

Z348

Floor Lamp

1 - 150W Max.
Bulb Type: A
Switch: Hi-Lo Dimming
Deep Patina Bronze Finish
Oyster Linen Shade

FINISH OPTION:
S348 Polished Nickel

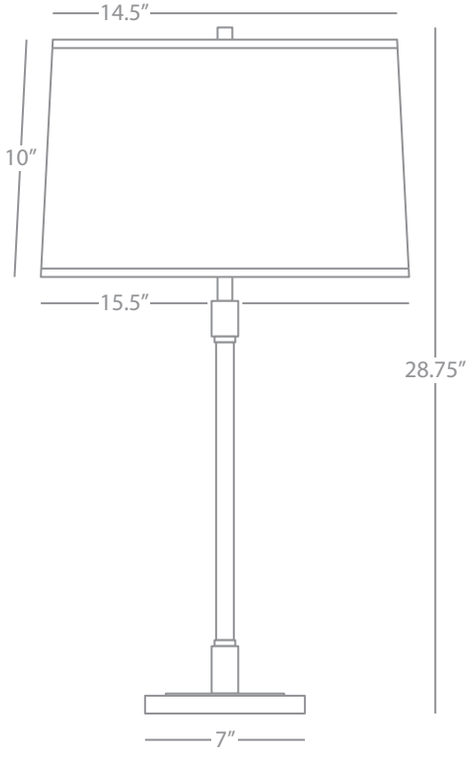

BANDIT

S347

Table Lamp

1 - 150W Max.
Bulb Type: A
Switch: Hi-Lo Dimming
Polished Nickel Finish
Oyster Linen Shade

FINISH OPTION:
Z347 Deep Patina Bronze



Z407



D412

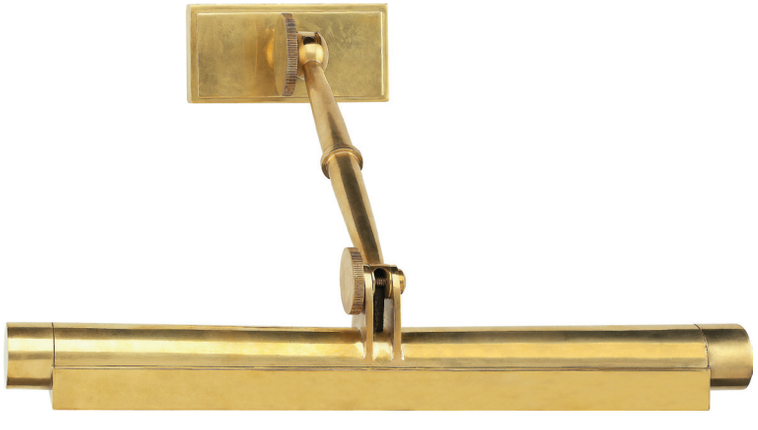

407

Meilleur

MEILLEUR

407
18" Picture Light

2 - 25W Max.
Bulb Type: B, Candelabra
Switch: On-Off Line
Cord Cover/Direct Wire
Antique Brass Finish
Metal Shade

FINISH OPTIONS:
D407 Dark Antique Nickel
Z407 Deep Patina Bronze

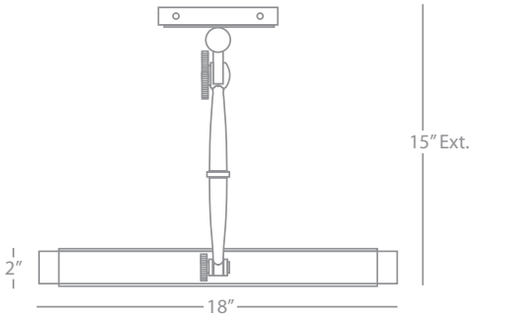

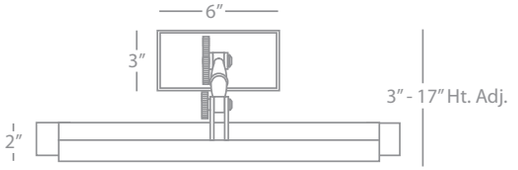

MEILLEUR

D412
24" Picture Light

4 - 25W Max.
Bulb Type: B, Candelabra
Switch: On-Off Line
Cord Cover/Direct Wire
Dark Antique Nickel Finish
Metal Shade

FINISH OPTIONS:
412 Antique Natural Brass
Z412 Deep Patina Bronze

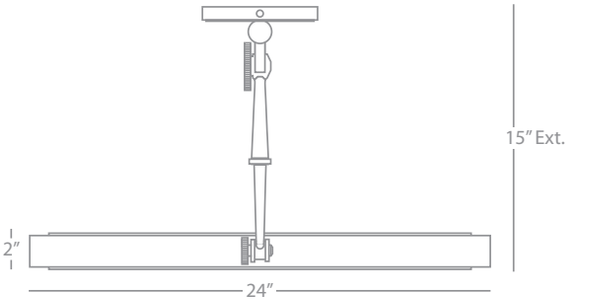

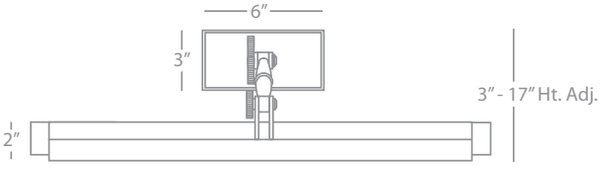



S427X



Z428X



S428X



Z429X

Meilleur

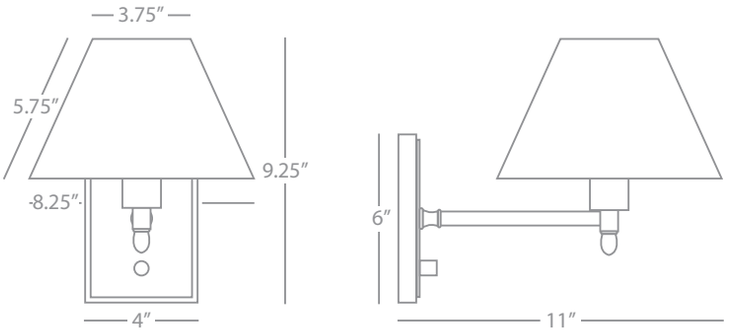

MEILLEUR

S427X

Wall Sconce

1 - 60W Max.
Bulb Type: B, Candelabra
Switch: Hi-Lo Rotary
24" Cord Cover/Direct Wire
Polished Nickel Finish
Off-White Linen Shade w/ Rolled Edge Hem

FINISH/SHADE OPTION:

Z427X Deep Patina Bronze
Light Beige Linen

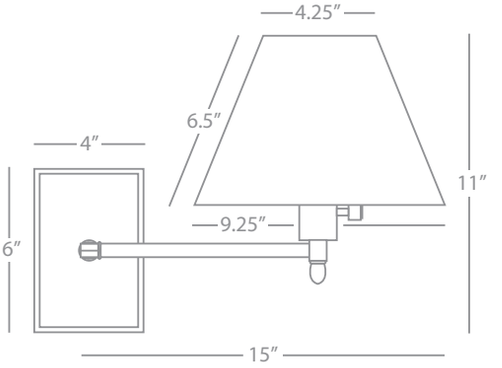

MEILLEUR

Z428X

Single Swing Arm Wall Sconce

1 - 100W Max.
Bulb Type: A
Switch: Full Range Dimmer
Cord Cover/Direct Wire
Deep Patina Bronze Finish
Light Beige Linen Shade w/ Rolled Edge Hem

FINISH/SHADE OPTION:

S428X Polished Nickel
Off-White Linen

MEILLEUR

Z429X

Double Swing Arm Sconce

1 - 100W Max.
Bulb Type: A
Switch: Full Range Dimmer
Cord Cover/Direct Wire
Deep Patina Bronze Finish
Light Beige Linen Shade w/ Rolled Edge Hem

FINISH/SHADE OPTION:

S429X Polished Nickel
Off-White Linen

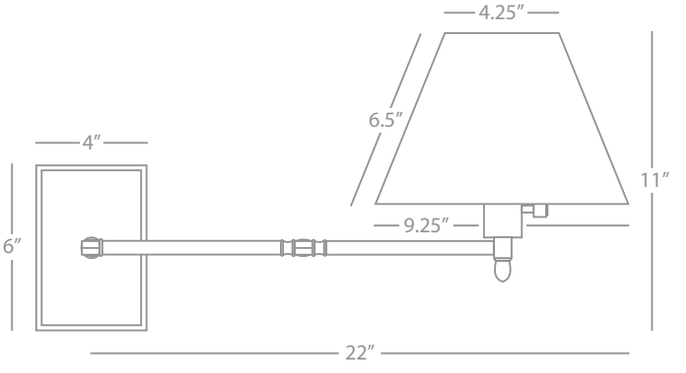



434



436



435

Wavy

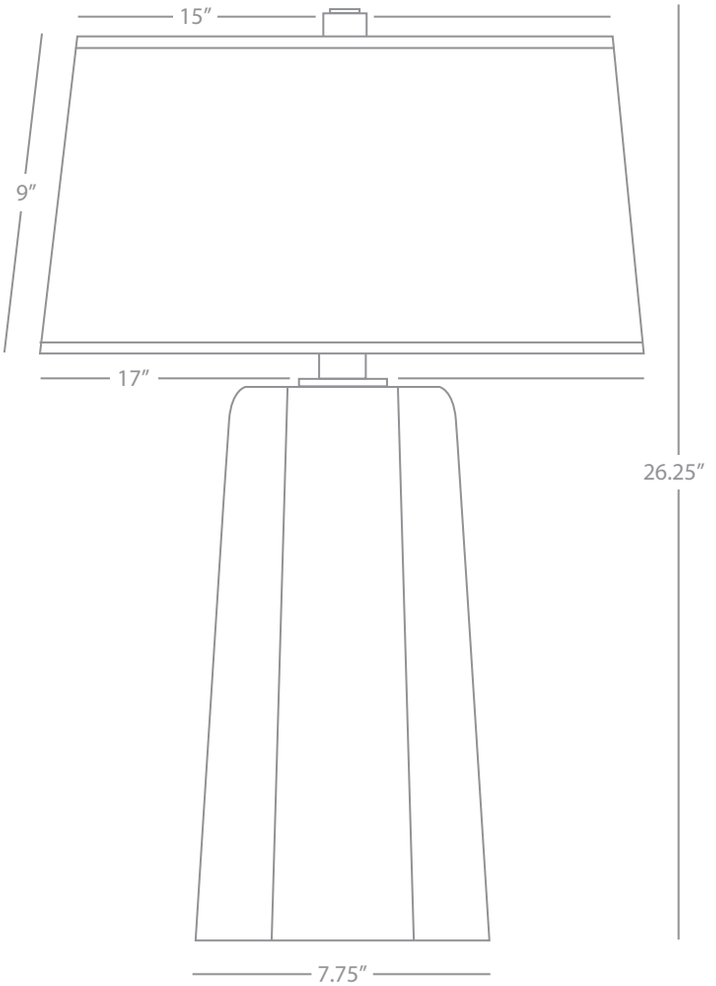

WAVY

434

Table Lamp

1 - 100W Max.
Bulb Type: A
Switch: Full Range Dimmer
White Cased Glass w/ Polished Nickel Accents
Translucent White Mont Blanc Parchment Shade

FINISH/SHADE OPTIONS:

435 Silver Mercury Glass
Translucent White Mont Blanc Parchment Shade

436 Tortoise Glass
Mont Blanc Parchment Shade


S460
S461
460
461
Z460
Z461

Koleman

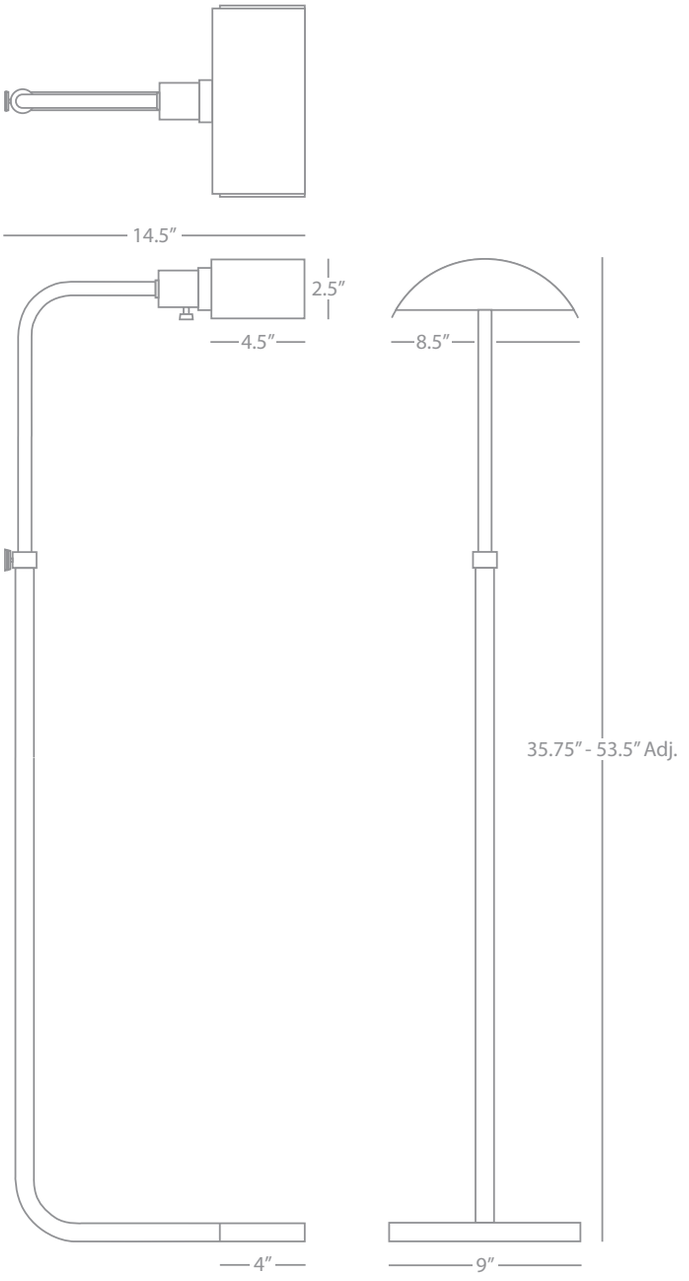

KOLEMAN

S461

Adjustable Task Floor Lamp

1 - 60W Max.
Bulb Type: A
Switch: Hi-Lo Dimming
Polished Nickel Finish
Metal Shade

FINISH OPTIONS:
461 Aged Brass
Z461 Deep Patina Bronze

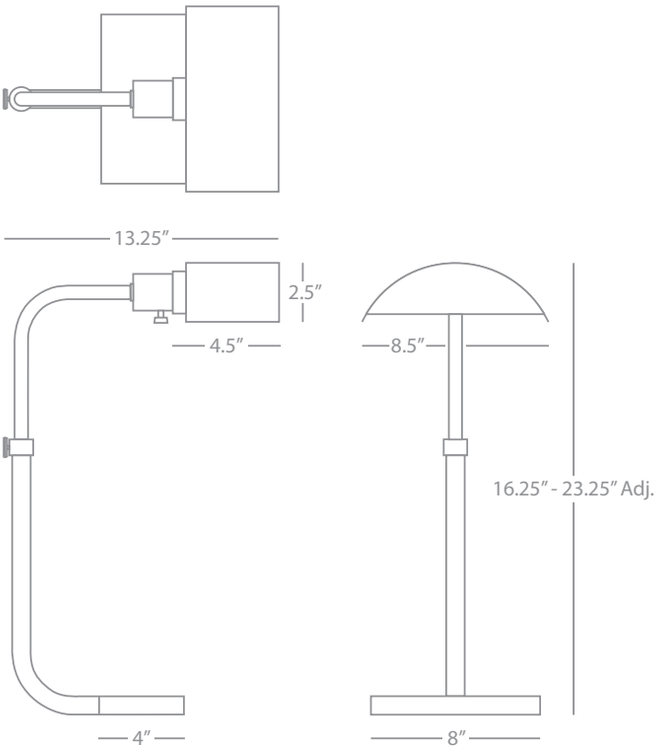

KOLEMAN

Z460

Adjustable Task Table Lamp

1 - 60W Max.
Bulb Type: A
Switch: Hi-Lo Dimming
Deep Patina Bronze Finish
Metal Shade

FINISH OPTIONS:
460 Aged Brass
S460 Polished Nickel



463



S464



Z462

Koleman

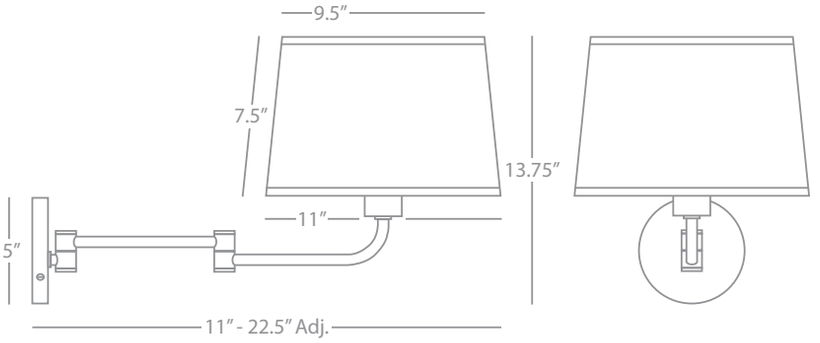

KOLEMAN

S464

Swing Arm Sconce

1 - 100W Max.
Bulb Type: A
Switch: Hi-Lo Dimming
24" Cord Cover/Direct Wire
Polished Nickel Finish
Oyster Linen Shade

FINISH OPTIONS:
464 Aged Brass
Z464 Deep Patina Bronze

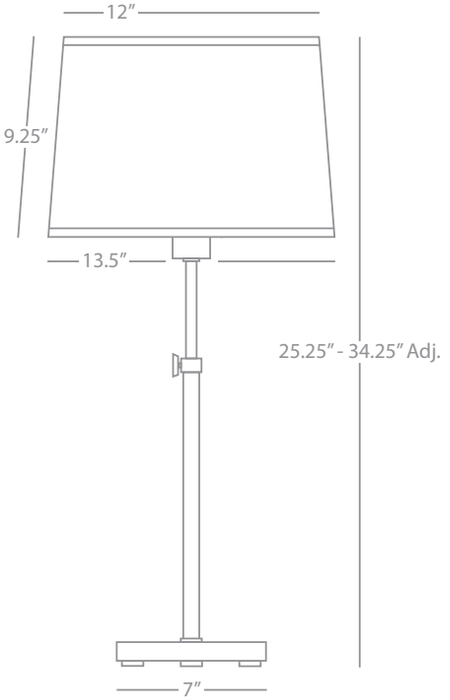

KOLEMAN

Z462

Adjustable Table Lamp

1 - 100W Max.
Bulb Type: A
Switch: Hi-Lo Dimming
Deep Patina Bronze Finish
Oyster Linen Shade

FINISH OPTIONS:
462 Aged Brass
S462 Polished Nickel

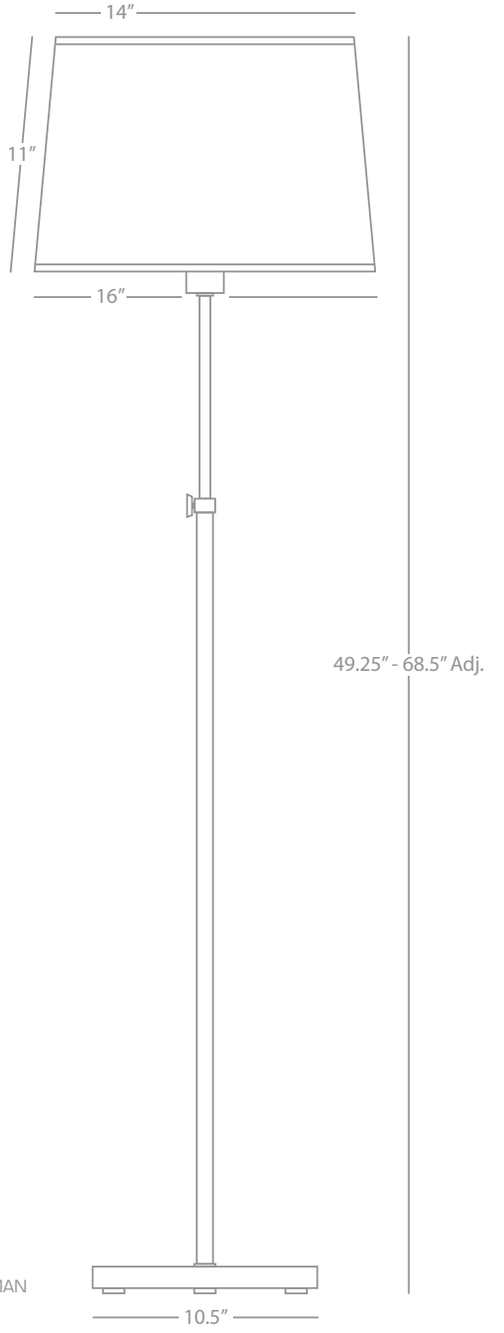

KOLEMAN

463

Adjustable Floor Lamp

1 - 100W Max.
Bulb Type: A
Switch: Hi-Lo Dimming
Aged Brass Finish
Oyster Linen Shade

FINISH OPTIONS:
S463 Polished Nickel
Z463 Deep Patina Bronze

Beehive



N616



Z616



S616



D616

Beehive

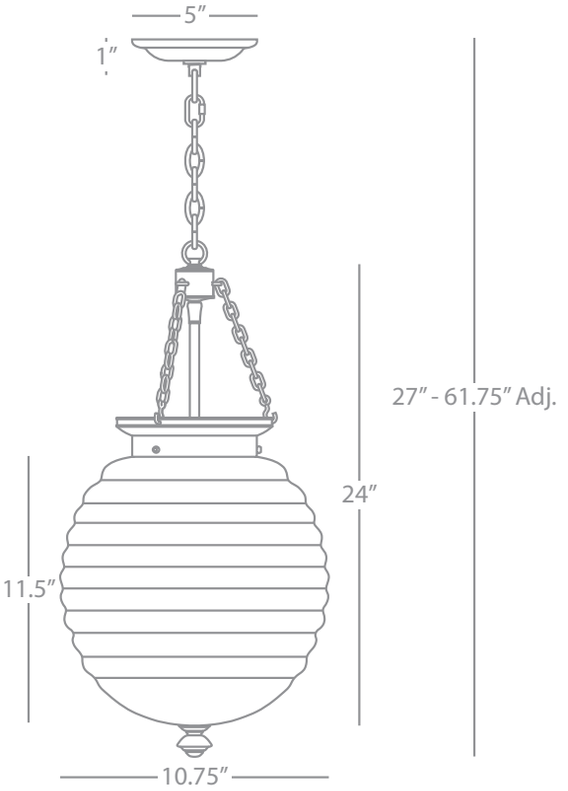

BEEHIVE

D616
Pendant

3 - 60W Max.
Bulb Type: B11 Torpedo
Direct Wire Only
Dark Antique Nickel Finish
Clear Glass Shade
Susp. Hardware: 3 Ft. Chain

FINISH/SHADE OPTIONS:

N616	Polished Nickel w/ Clear Glass Shade
S616	Polished Nickel w/ White Cased Glass Shade
Z616	Deep Patina Bronze w/ Topaz Glass Shade

Delilah



PM701



EG701



MB701



RR701

Delilah

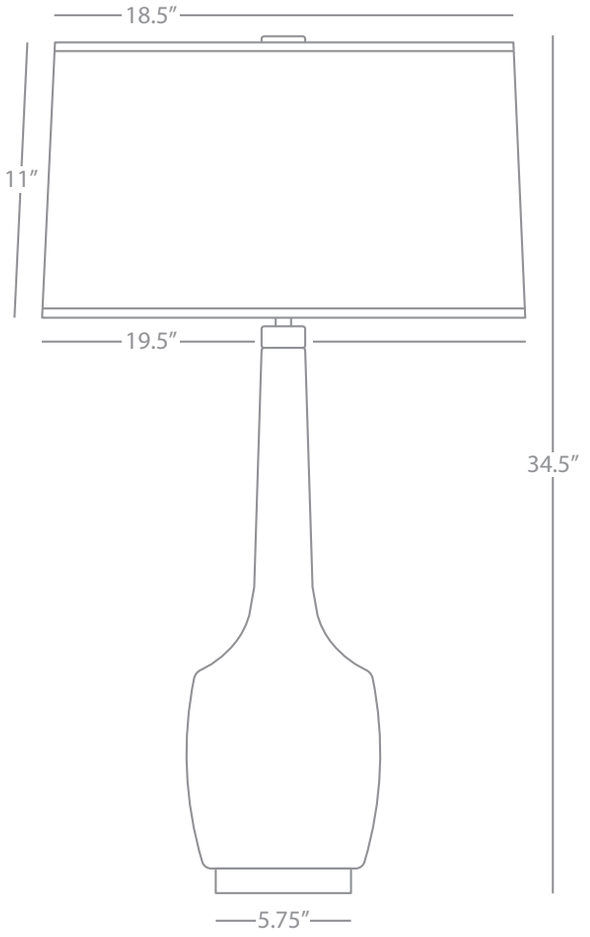

DELILAH

EG701

Table Lamp

1 - 150W Max.
Bulb Type: A
Switch: Hi-Lo Dimming
Emerald Green Glazed Ceramic
Oyster Linen Shade w/ Self-Fabric
Top and Bottom Diffuser

See Page 205 for Color Options



Z750

P745



S746

Albert

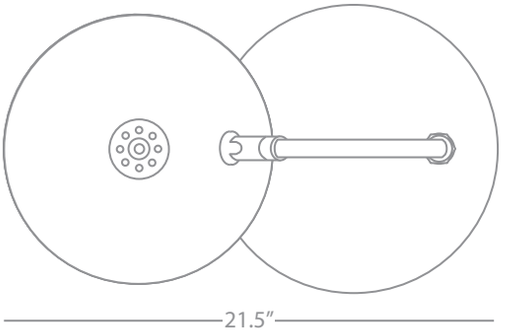



ALBERT

Z750

Task Floor Lamp

1 - 100W Max.
Bulb Type: A
Switch: Full Range Dimmer Foot Switch
Deep Patina Bronze Finish
Metal Shade

FINISH OPTION:
P750 Patina Nickel

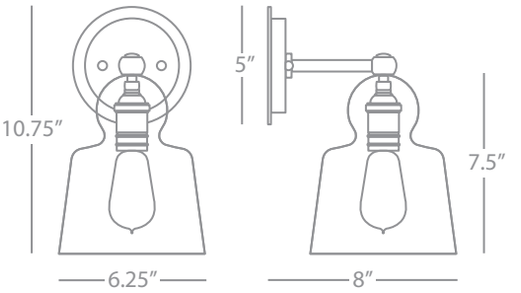

ALBERT

P745

Wall Sconce

1 - 60W Max.
Bulb Type: A
Direct Wire Only
Patina Nickel Finish
Clear Glass Shade
Ships with 1 - 40W Filament Bulb
[HIS01 See page 202]

FINISH OPTIONS:
S745 Polished Nickel
Z745 Deep Patina Bronze

ALBERT

S746

Pendant

1 - 100W Max.
Bulb Type: A
Direct Wire
Polished Nickel Finish
Clear Glass Shade
Susp. Hardware: 12 Ft. Black Fabric Wrapped Cord
Ships with 1 - 40W Filament Bulb
[HIS01 See page 202]

FINISH OPTIONS:
P746 Patina Nickel
Z746 Deep Patina Bronze

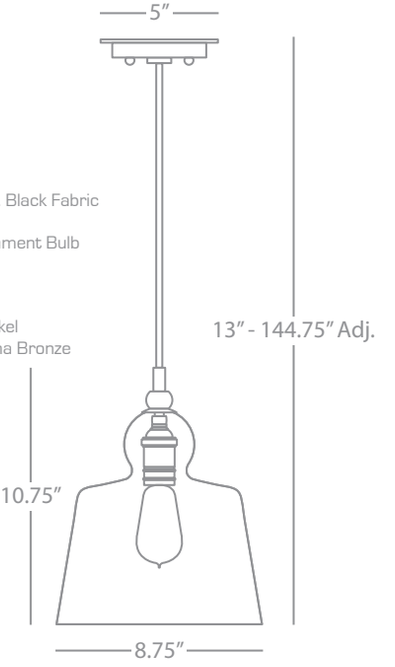



Z748

P749



P747

Albert

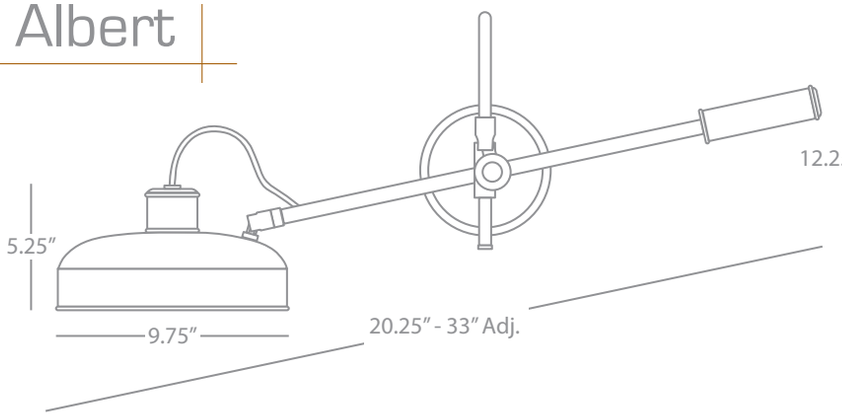

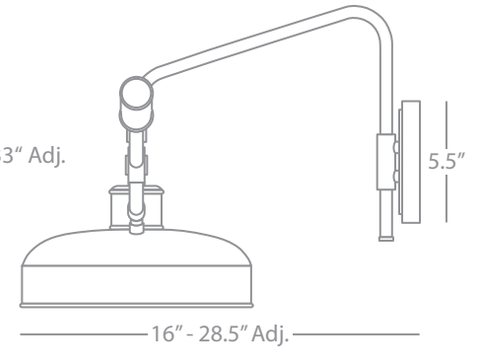

ALBERT

P749

Wall Mounted Boom Lamp

1 - 60W Max.
Bulb Type: A
Switch: On-Off Line Switch
24" Cord Cover/Direct Wire
Patina Nickel Finish
Metal Shade

FINISH OPTION:
Z749 Deep Patina Bronze

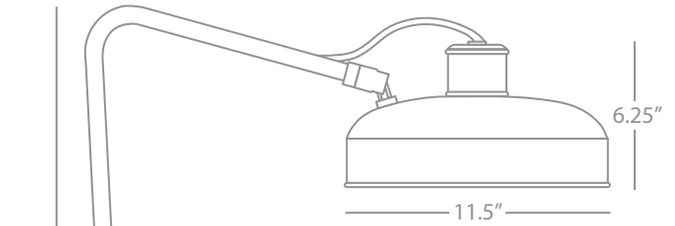

ALBERT

Z748

Floor Lamp

1 - 100W Max.
Bulb Type: A
Switch: Full Range Dimmer Foot Switch
Deep Patina Bronze Finish
Metal Shade

FINISH OPTION:
P748 Patina Nickel

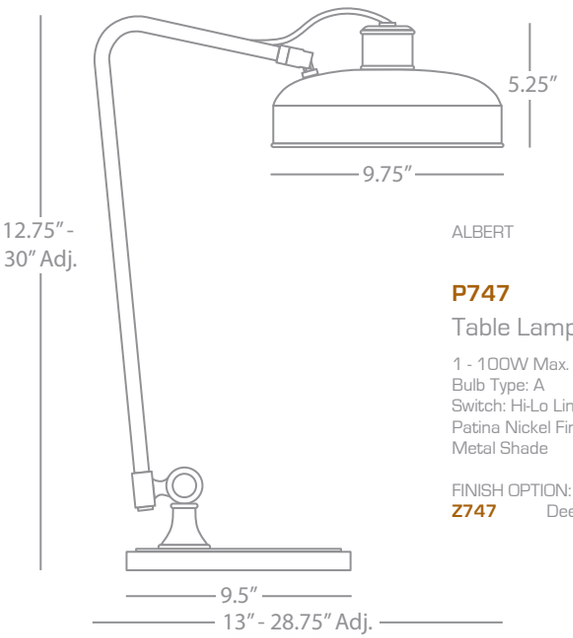

ALBERT

P747

Table Lamp

1 - 100W Max.
Bulb Type: A
Switch: Hi-Lo Line Switch
Patina Nickel Finish
Metal Shade

FINISH OPTION:
Z747 Deep Patina Bronze



G801B



801



800



G800

Dolly

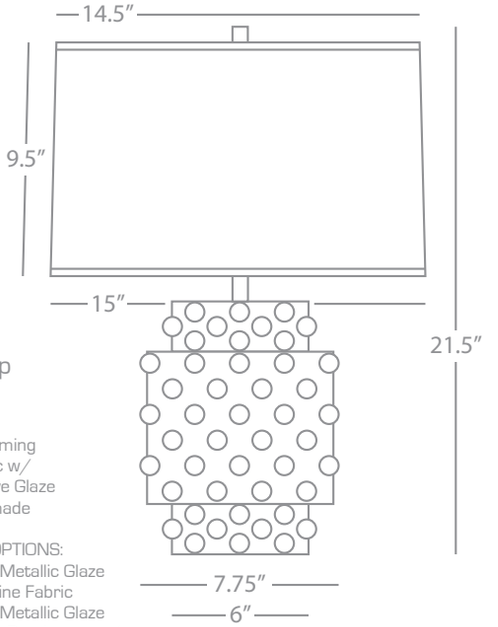

DOLLY

801

Accent Lamp

1 - 150W Max.
Bulb Type: A
Switch: Hi-Lo Dimming
Textured Ceramic w/
Gunmetal Reactive Glaze
Fondine Fabric Shade

FINISH/SHADE OPTIONS:

G801	Gold Metallic Glaze Fondine Fabric
G801B	Gold Metallic Glaze Black Parchment w/ Gold Foil Lining

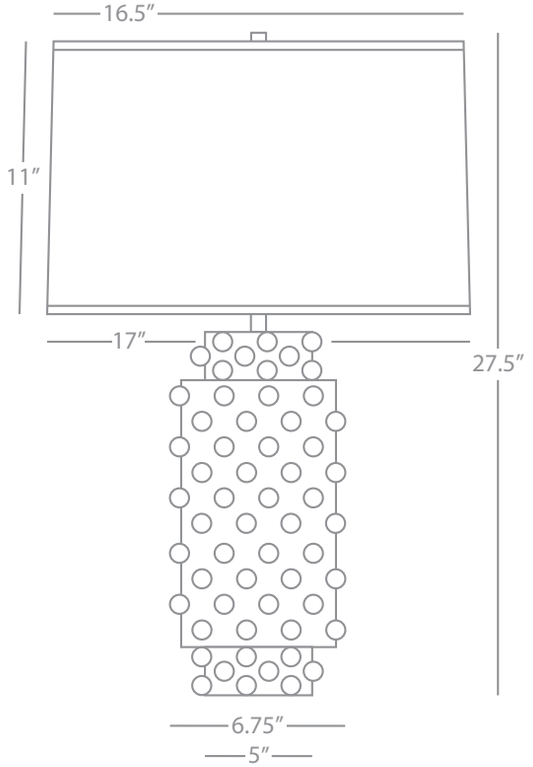

DOLLY

800

Table Lamp

1 - 150W Max.
Bulb Type: A
Switch: Hi-Lo Dimming
Textured Ceramic w/
Gunmetal Reactive Glaze
Fondine Fabric Shade

FINISH/SHADE OPTIONS:

G800	Gold Metallic Glaze Fondine Fabric
G800B	Gold Metallic Glaze Black Parchment w/ Gold Foil Lining



A808



F808



O808



N808



T808

Penelope

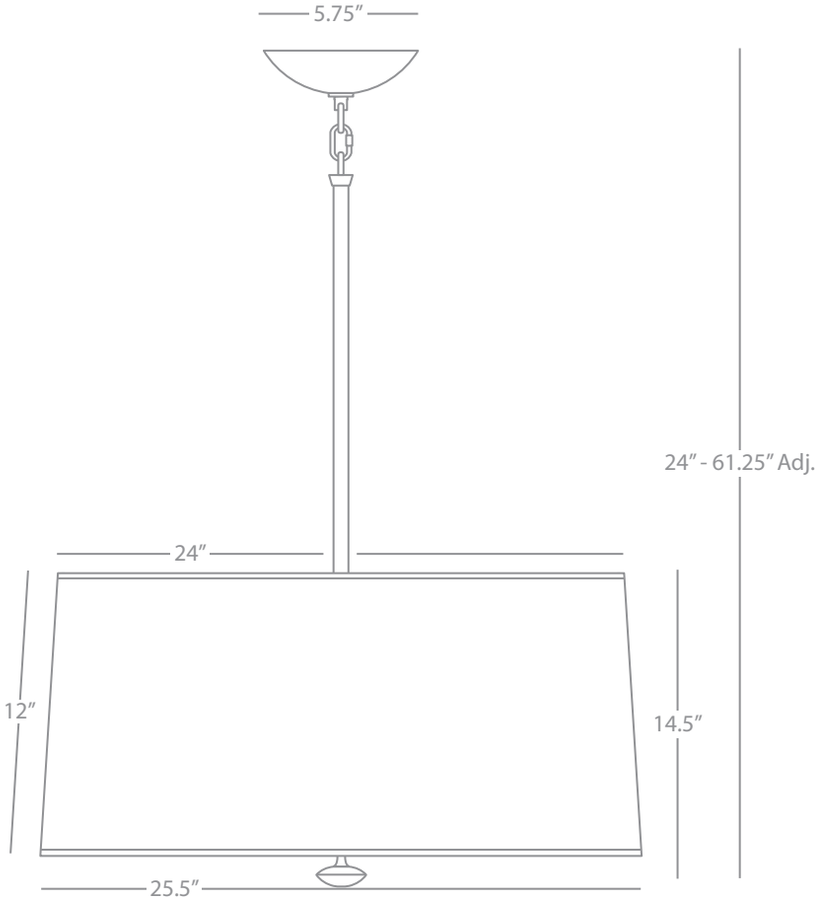

PENELOPE

N808

Pendant

3 - 100W Max.
Bulb Type: A
Direct Wire Only
Polished Nickel Finish
Lead Crystal Finial
Navy Ceramik Parchment Shade w/ Silver Mylar Lining
13.25" Dia. Polished Nickel Finished Metal Diffuser Included
Susp. Hardware: 3 pcs. 5/8" x 12" & 1 pc. 5/8" x 6" Extensions

SHADE OPTIONS:

A808	Ascot White Fabric Shade
B808	Black Ceramik Parchment w/ Silver Mylar Lining
F808	Fuchsia Ceramik Parchment w/ Silver Mylar Lining
O808	Orange Ceramik Parchment w/ Silver Mylar Lining
R808	Red Ceramik Parchment w/ Silver Mylar Lining
S808	Silver Mylar w/ White Ceramik Parchment Lining
T808	Taupe Ceramik Parchment w/ Silver Mylar Lining
W808	White Ceramik Parchment w/ Silver Mylar Lining

Penelope



R810



B810



A810



W809



S809

Penelope

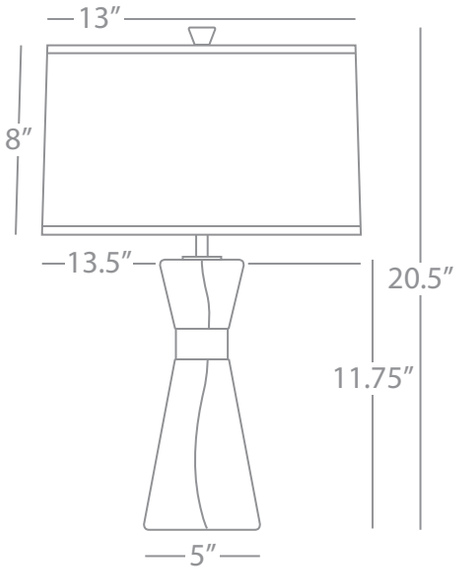

PENELOPE

B810

Accent Lamp

1 - 100W Max.
Bulb Type: A
Switch: Hi-Lo Dimming
Clear Glass Base w/
Polished Nickel Accents
Black Ceramik Parchment Shade w/
Silver Mylar Lining

SHADE OPTIONS:

A810	Ascot White Fabric
F810	Fuchsia Ceramik Parchment w/ Silver Mylar Lining
N810	Navy Ceramik Parchment w/ Silver Mylar Lining
O810	Orange Ceramik Parchment w/ Silver Mylar Lining
R810	Red Ceramik Parchment w/ Silver Mylar Lining
S810	Silver Mylar w/ White Ceramik Parchment Lining
T810	Taupe Ceramik Parchment w/ Silver Mylar Lining
W810	White Ceramik Parchment w/ Silver Mylar Lining

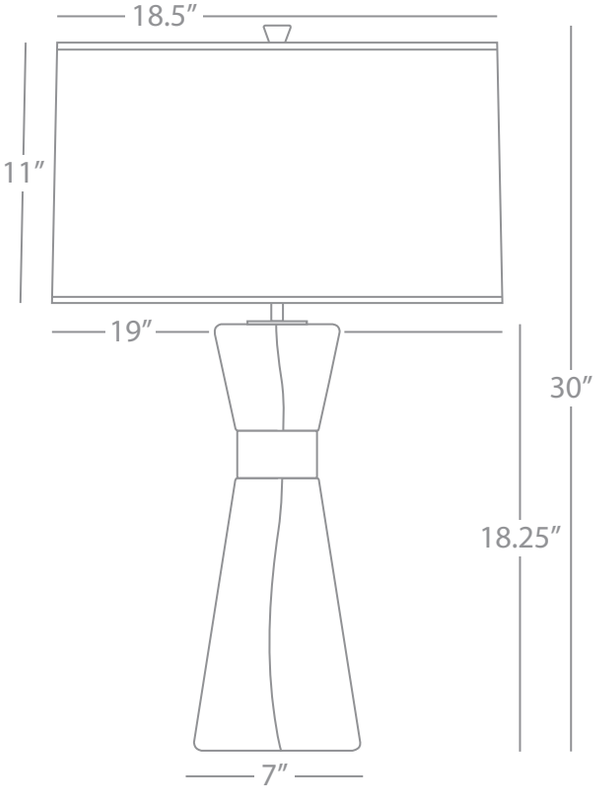

PENELOPE

S809

Table Lamp

1 - 150W Max.
Bulb Type: A
Switch: Hi-Lo Dimming
Clear Glass Base w/
Polished Nickel Accents
Silver Mylar Shade w/ White Ceramik Parchment Lining

SHADE OPTIONS:

A809	Ascot White Fabric
B809	Black Ceramik Parchment w/ Silver Mylar Lining
F809	Fuchsia Ceramik Parchment w/ Silver Mylar Lining
N809	Navy Ceramik Parchment w/ Silver Mylar Lining
O809	Orange Ceramik Parchment w/ Silver Mylar Lining
R809	Red Ceramik Parchment w/ Silver Mylar Lining
T809	Taupe Ceramik Parchment w/ Silver Mylar Lining
W809	White Ceramik Parchment w/ Silver Mylar Lining



829



828

Oliver

OLIVER

829

Swing Arm Sconce

1 - 60W Max.
Bulb Type: B, Candelabra
Switch: On-Off Line Switch
24" Cord Cover/Direct Wire
Unfinished Mango Wood w/
Patina Nickel Accents
Open Weave Heather Linen Shade

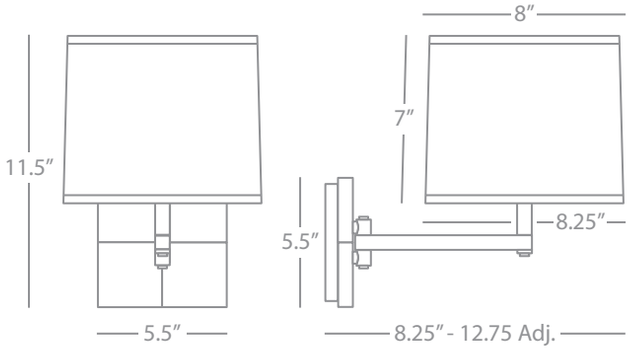

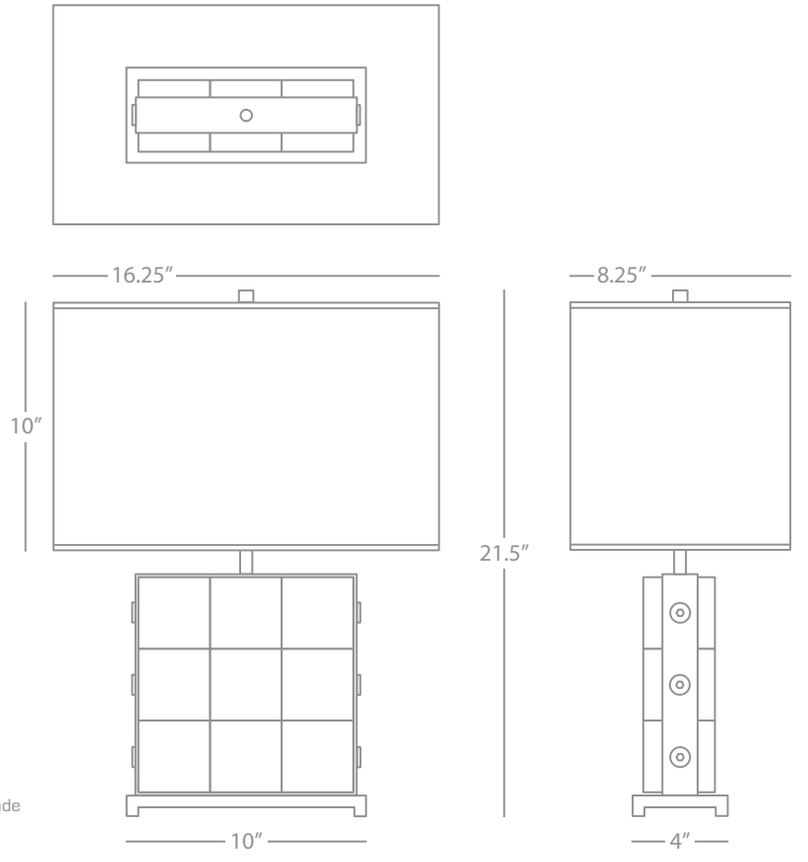

OLIVER

828

Table Lamp

1 - 150W Max.
Bulb Type: A
Switch: Hi-Lo Dimming
Unfinished Mango Wood w/
Patina Nickel Accents
Rectangular Open Weave Heather Linen Shade



830

Oren

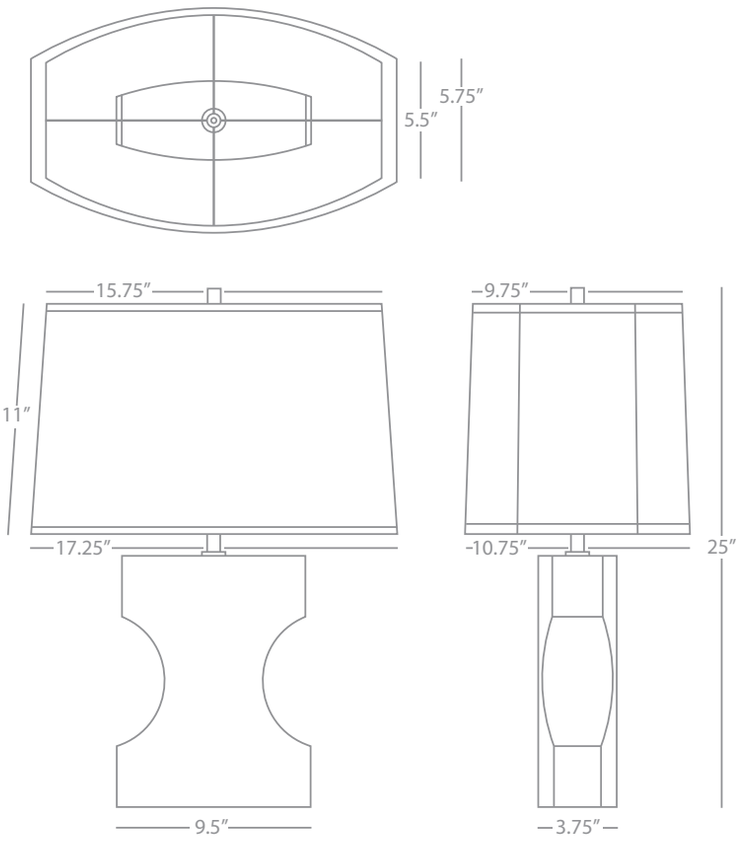

OREN

830

Table Lamp

1 - 150W Max.
Bulb Type: A
Switch: 3-Way
Electrochemical Phosphatized Iron
Modified Oval Eco Friendly Natural Linen Shade

Helena



831

Freya



847



Bronte

838X



Phoebe

870C

Helena | Bronte | Freya | Phoebe

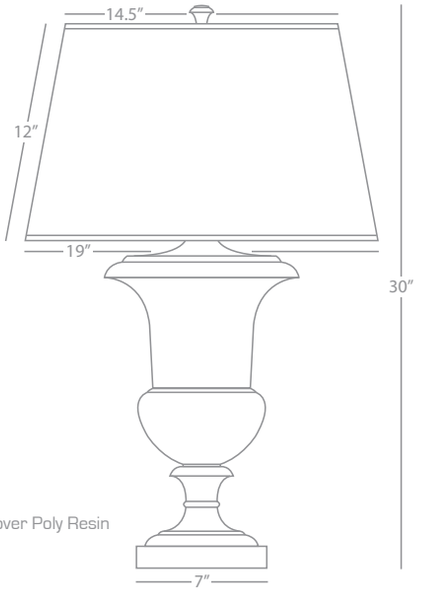

HELENA

831

Table Lamp

1 - 150W Max.
Bulb Type: A
Switch: 3-Way
Matte White Painted Finish over Poly Resin
White Brussels Linen Shade

FINISH/SHADE OPTIONS:

832 Faux Limestone Painted Finish
Oyster Linen Shade

832X Faux Limestone Painted Finish
Taupe Painted Opaque Parchment Shade

833 Faux Concrete Painted Finish
Translucent White Monte Blanc Parchment Shade

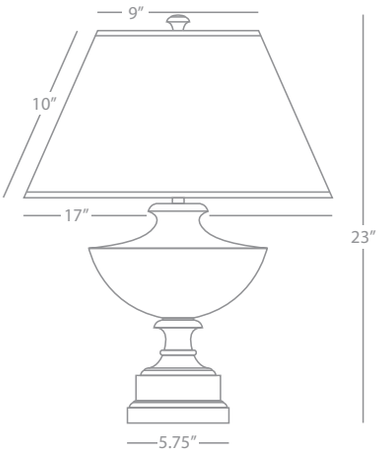

FREYA

847

Table Lamp

1 - 150W Max.
Bulb Type: A
Switch: 3-Way
Faux Concrete Painted Finish over Poly Resin
Translucent White Monte Blanc Parchment Shade

FINISH/SHADE OPTIONS:

845 Matte White Painted Finish
White Brussels Linen Shade

846 Faux Limestone Painted Finish
Oyster Linen Shade

846X Faux Limestone Painted Finish
Taupe Painted Opaque Parchment Shade

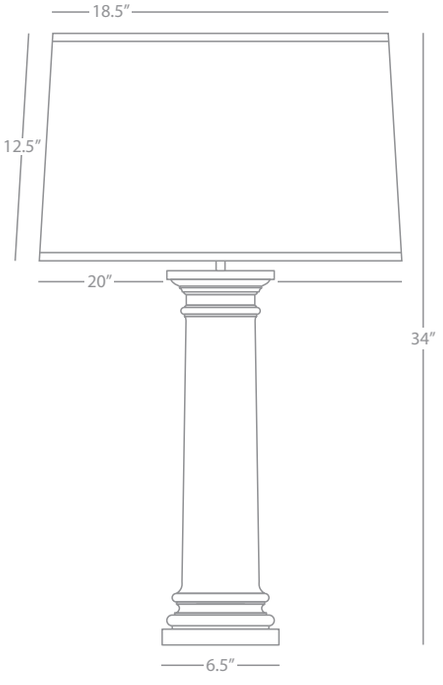

PHOEBE

870C

Table Lamp

1 - 150W Max.
Bulb Type: A
Switch: 3-Way
Matte White Painted Finish over Poly Resin
Chocolate Painted Opaque Parchment Shade w/ Matte Silver Lining

FINISH/SHADE OPTIONS:

870 Matte White Painted Finish
White Brussels Linen Shade

871 Faux Limestone Painted Finish
Oyster Linen Shade

871X Faux Limestone Painted Finish
Taupe Painted Opaque Parchment Shade

872 Faux Concrete Painted Finish
Translucent White Monte Blanc Parchment Shade

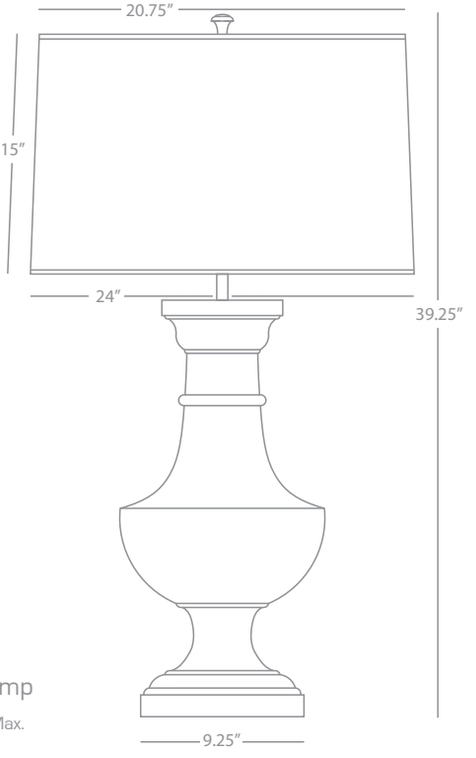

BRONTE

838X

Table Lamp

1 - 150W Max.
Bulb Type: A
Switch: 3-Way
Faux Limestone Painted Finish over Poly Resin
Taupe Painted Opaque Parchment Shade w/ Matte Silver Lining

FINISH/SHADE OPTIONS:

837 Matte White Painted Finish
White Brussels Linen Shade

837C Matte White Painted Finish
Chocolate Painted Opaque Parchment Shade

838 Faux Limestone Painted Finish
Oyster Linen Shade

839 Faux Concrete Painted Finish
Translucent White Monte Blanc Parchment Shade



Freya Al Fresco

JV451



Helena Al Fresco

WZ450



Phoebe Al Fresco

WZ453



Bronte Al Fresco

JV452

Helena | Bronte | Freya | Phoebe Al Frecso

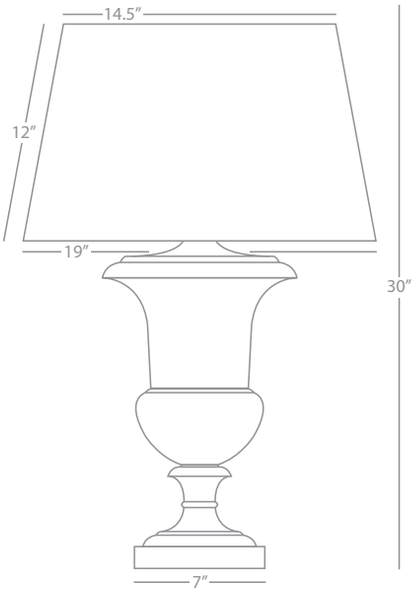

HELENA AL FRESCO

WZ450

Outdoor Table Lamp

1 - 100W Max.
Bulb Type: A
Switch: On-Off
Weathered Zinc Painted Finish over Poly Resin
White Sunbrella Fabric Shade Cover
UL Rated Wet Location

FINISH OPTION:
JV450 Java Brown

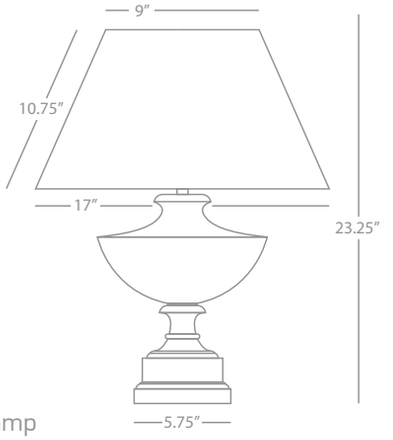

FREYA AL FRESCO

JV451

Outdoor Accent Lamp

1 - 100W Max.
Bulb Type: A
Switch: On-Off
Java Brown Painted Finish over Poly Resin
White Sunbrella Fabric Shade Cover
UL Rated Wet Location

FINISH OPTION:
JV451 Weathered Zinc

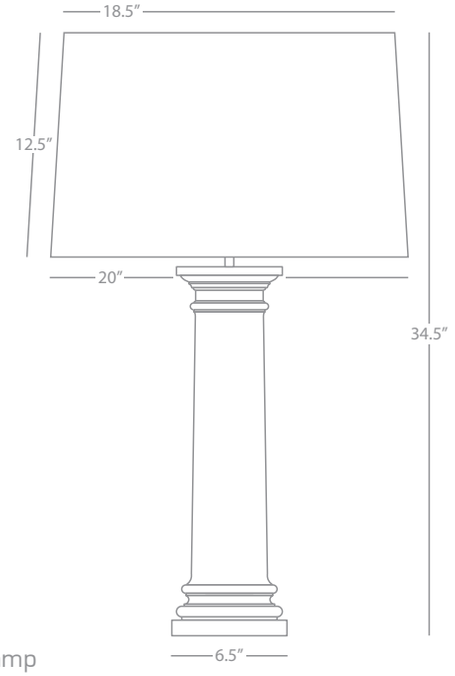

PHOEBE AL FRESCO

WZ453

Outdoor Table Lamp

1 - 100W Max.
Bulb Type: A
Switch: On-Off
Weathered Zinc Painted Finish over Poly Resin
White Sunbrella Fabric Shade Cover
UL Rated Wet Location

FINISH OPTION:
JV453 Java Brown

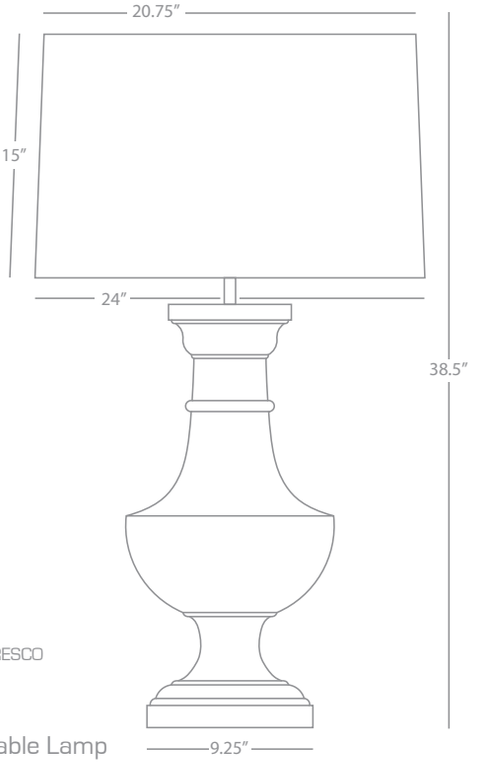

BRONTE AL FRESCO

JV452

Outdoor Table Lamp

1 - 100W Max.
Bulb Type: A
Switch: On-Off
Java Brown Painted Finish over Poly Resin
White Sunbrella Fabric Shade Cover
UL Rated Wet Location

FINISH OPTION:
WZ452 Weathered Zinc



840X

Aster

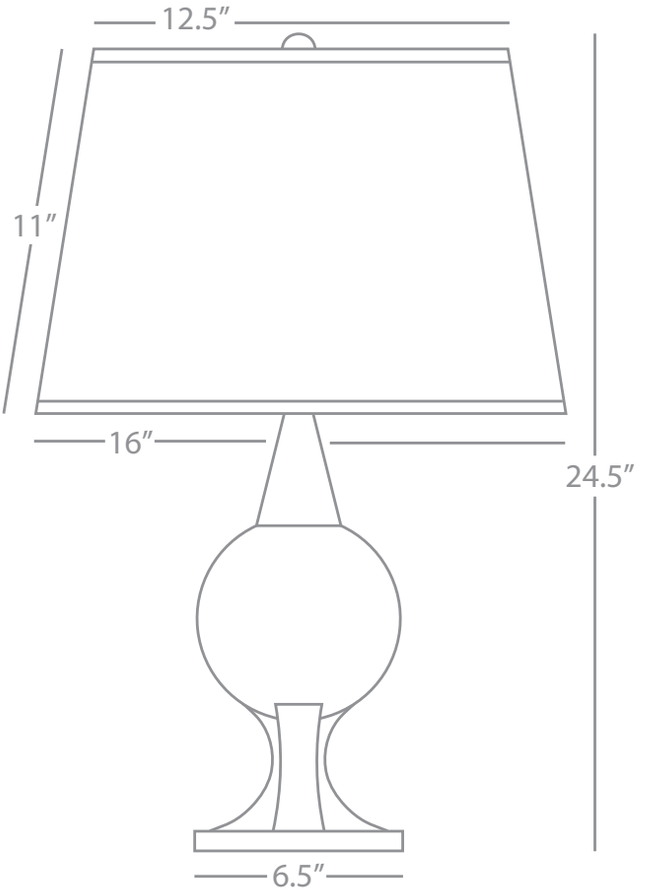

ASTER

840X

Table Lamp

1 - 150W Max.
Bulb Type: A
Switch: 3-Way
Distressed Iron Finish
Raw Linen Shade



861



862



S860

Warwick

WARWICK

862

Half Round Sconce

2 - 60W Max.
Bulb Type: B, Candelabra
Direct Wire Only
Antique Brass Finish w/
Painted Bronze Accents
Clear Glass Shade

FINISH OPTION:
S862 Antique Silver w/
Painted Bronze Accents

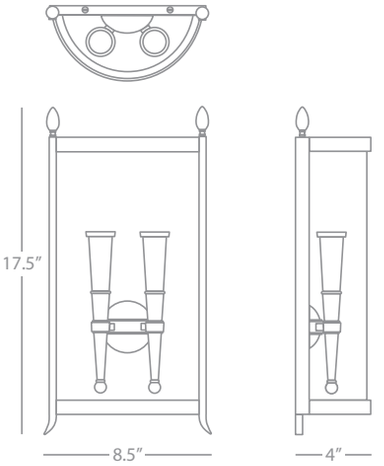

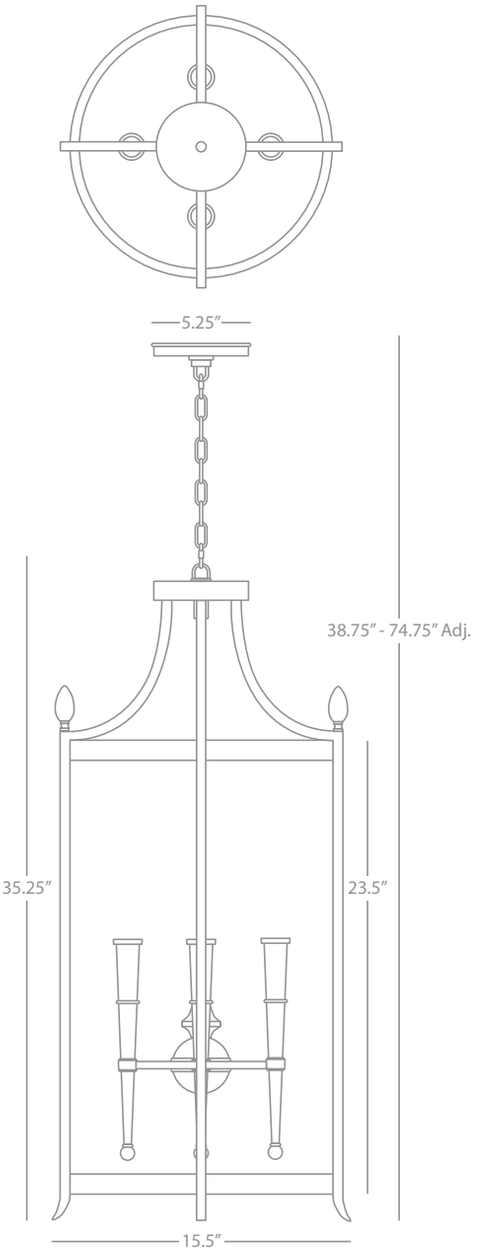

WARWICK

S860

Small Pendant

3 - 60W Max.
Bulb Type: B, Candelabra
Direct Wire
Antique Silver Finish w/
Painted Bronze Accents
Clear Glass Shade Panels
Susp. Hardware: 3 Ft. Chain

FINISH OPTION:
860 Antique Brass w/
Painted Bronze Accents

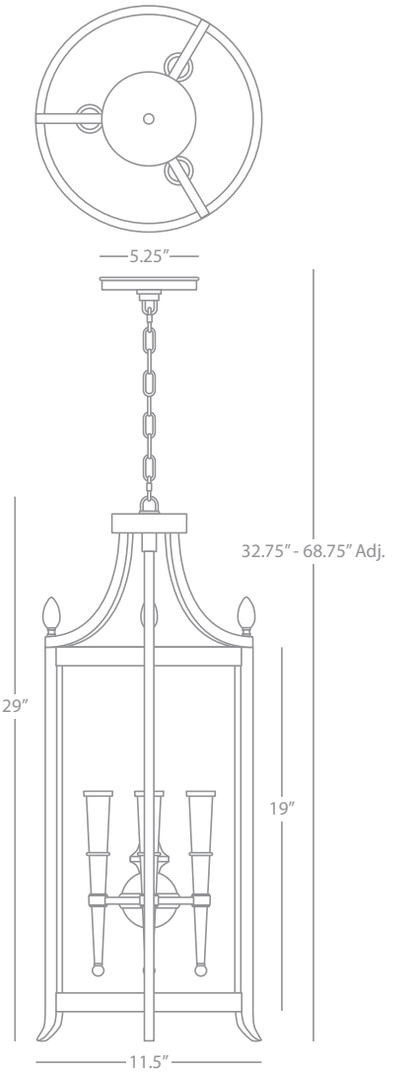

WARWICK

861

Large Pendant

4 - 60W Max.
Bulb Type: B, Candelabra
Direct Wire
Antique Brass Finish w/
Painted Bronze Accents
Clear Glass Shade Panels
Susp. Hardware: 3 Ft. Chain

FINISH OPTION:
S861 Antique Silver w/
Painted Bronze Accents



S864



S863



863



864

Magellan

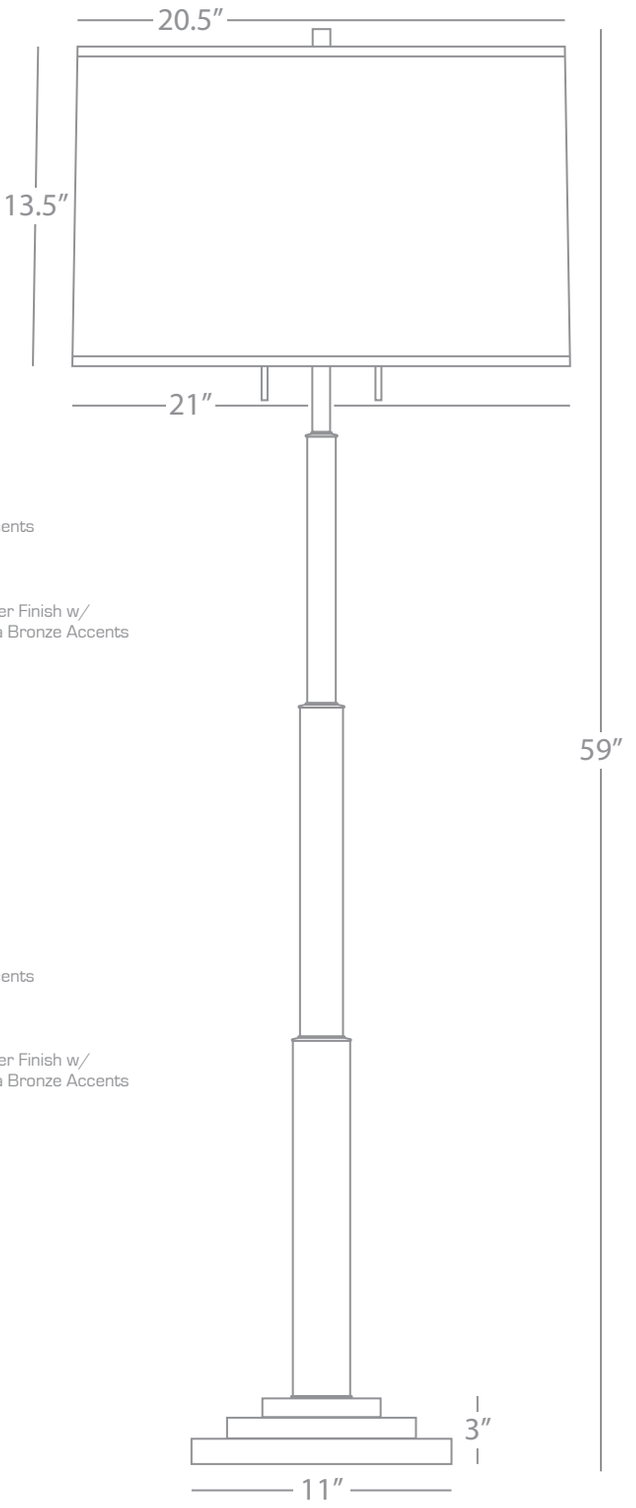

MAGELLAN

864

Floor Lamp

2 - 100W Max.
Bulb Type: A
Switch: Hi-Lo Pull Chains
Antique Brass Finish w/
Deep Patina Bronze Accents
Oyster Linen Shade

FINISH OPTION:
S864 Antique Silver Finish w/
Deep Patina Bronze Accents

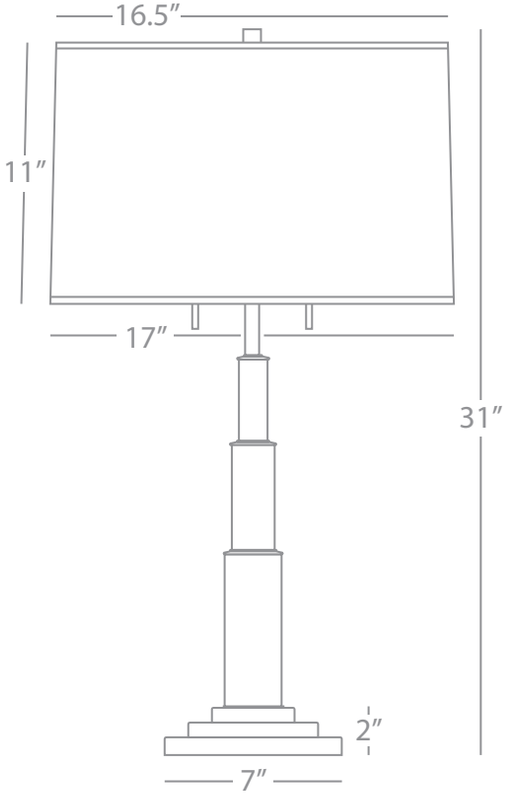

MAGELLAN

863

Table Lamp

2 - 100W Max.
Bulb Type: A
Switch: Hi-Lo Pull Chains
Antique Brass Finish w/
Deep Patina Bronze Accents
Oyster Linen Shade

FINISH OPTION:
S863 Antique Silver Finish w/
Deep Patina Bronze Accents



S882

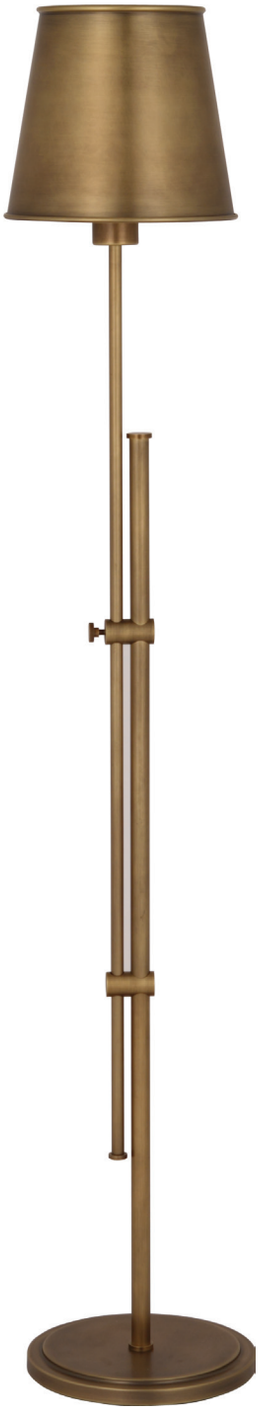

883



885



S884



S881



880

Aiden

AIDEN

S884

Wall Sconce

1 - 60W Max.
Bulb Type: A
Switch: Hi-Lo Dimming
24" Cord Cover/Direct Wire
Polished Nickel Finish
Matching Metal Shade

FINISH OPTION:
884 Aged Brass

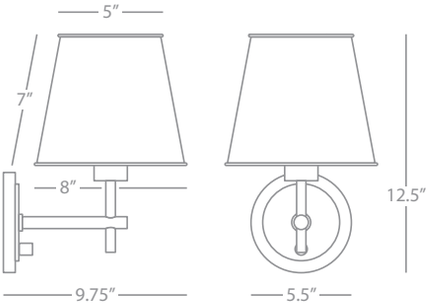

AIDEN

S881

Double Pump Table Lamp

1 - 60W Max.
Bulb Type: A
Switch: Hi-Lo Dimming
Polished Nickel Finish
Matching Metal Shade

FINISH OPTION:
3380 Aged Brass

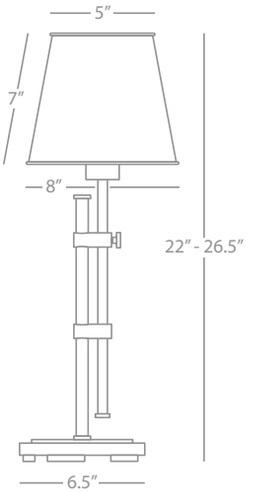

AIDEN

885

Double Sconce

2 - 60W Max.
Bulb Type: A
Switch: Hi-Lo Dimming
24" Cord Cover/Direct Wire
Aged Brass Finish
Matching Metal Shade

FINISH OPTION:
S885 Polished Nickel

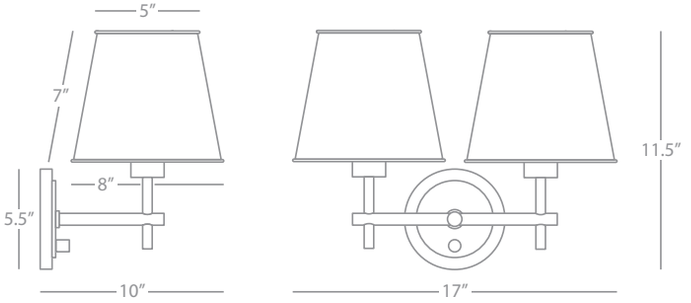

AIDEN

880

Table Lamp

1 - 60W Max.
Bulb Type: A
Switch: Hi-Lo Dimming
Aged Brass Finish
Matching Metal Shade

FINISH OPTION:
S880 Polished Nickel

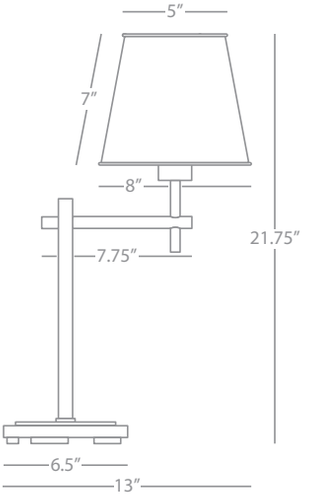

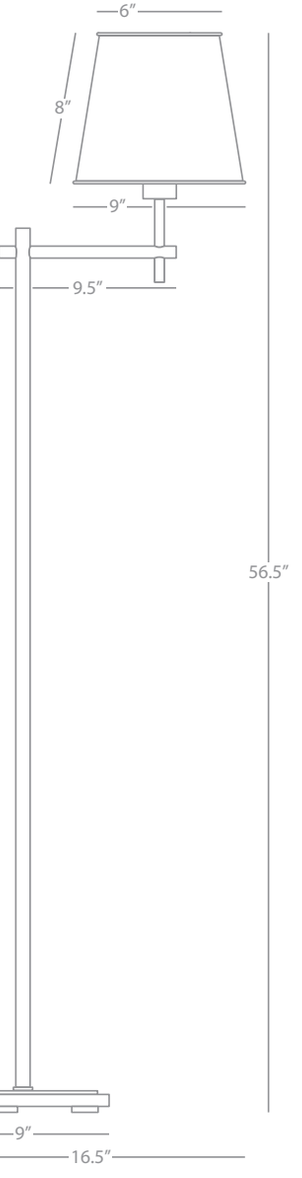

AIDEN

883

Double Pump Floor Lamp

1 - 100W Max.
Bulb Type: A
Switch: Hi-Lo Dimming
Aged Brass Finish
Matching Metal Shade

FINISH OPTION:
S883 Polished Nickel

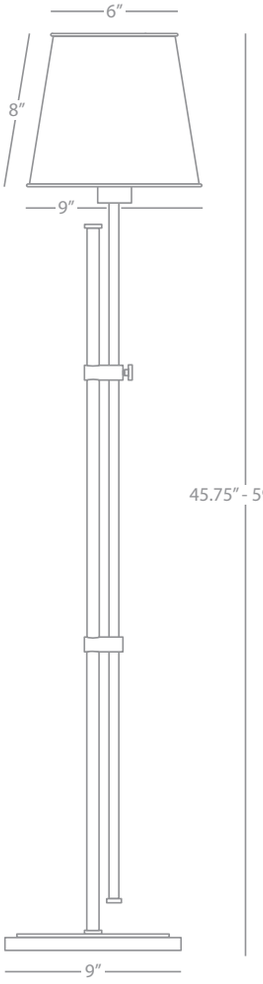

AIDEN

S882

Floor Lamp

1 - 100W Max.
Bulb Type: A
Switch: Hi-Lo Dimming
Polished Nickel Finish
Matching Metal Shade

FINISH OPTION:
882 Aged Brass



893



891



892



894



890

Anna

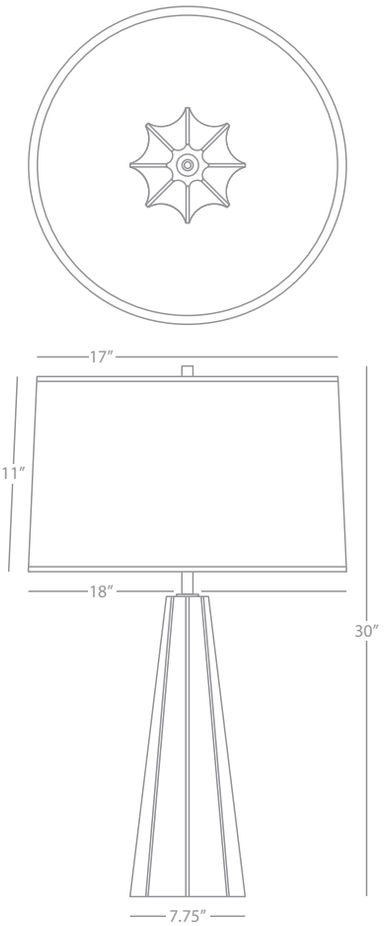

ANNA

894

Tapered Table Lamp

1 - 150W Max.
Bulb Type: A
Switch: Hi-Lo Dimming
Faux Snakeskin Wrapped Base w/
Aged Brass Finished Accents
Taupe Dupoini Fabric Shade

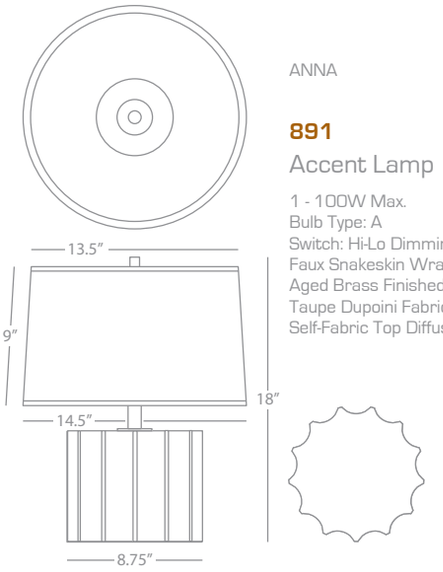

ANNA

891

Accent Lamp

1 - 100W Max.
Bulb Type: A
Switch: Hi-Lo Dimming
Faux Snakeskin Wrapped Base w/
Aged Brass Finished Accents
Taupe Dupoini Fabric Shade w/
Self-Fabric Top Diffuser

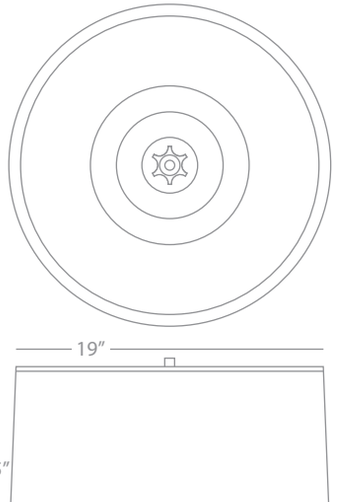

ANNA

893

Floor Lamp

1 - 150W Max.
Bulb Type: A
Switch: Hi-Lo Dimming
Faux Snakeskin Wrapped Base w/
Aged Brass Finished Accents
Taupe Dupoini Fabric Shade

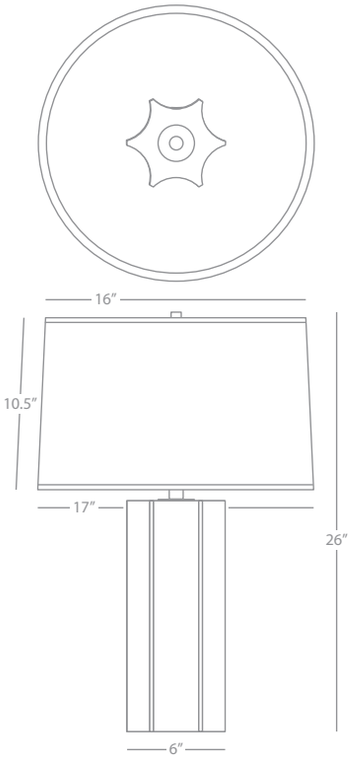

ANNA

890

Table Lamp

1 - 150W Max.
Bulb Type: A
Switch: Hi-Lo Dimming
Faux Snakeskin Wrapped Base w/
Aged Brass Finished Accents
Taupe Dupoini Fabric Shade

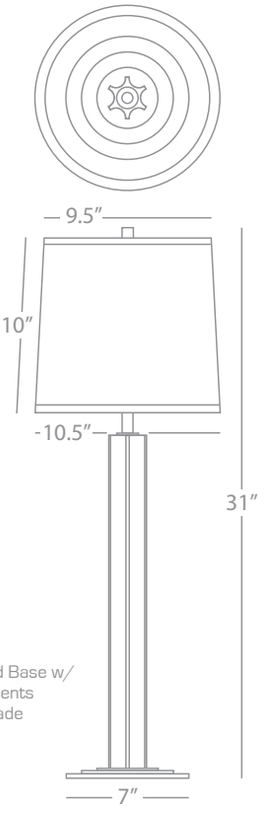

ANNA

892

Buffet Table Lamp

1 - 100W Max.
Bulb Type: A
Switch: Hi-Lo Dimming
Faux Snakeskin Wrapped Base w/
Aged Brass Finished Accents
Taupe Dupoini Fabric Shade

Delta



935



942



941

Mason



CF960



964



962

Delta | Mason

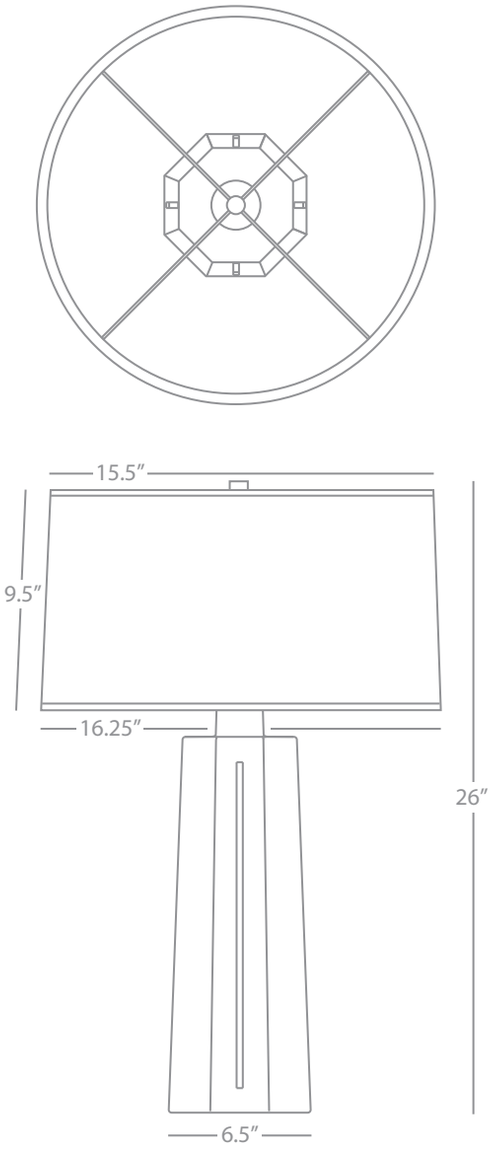

MASON

964

Table Lamp

1 - 150W Max.
Bulb Type: A
Switch: 3-Way
Peacock Glazed Ceramic
Polished Nickel Accents
Oyster Linen Shade

See Page 207 for Color Options

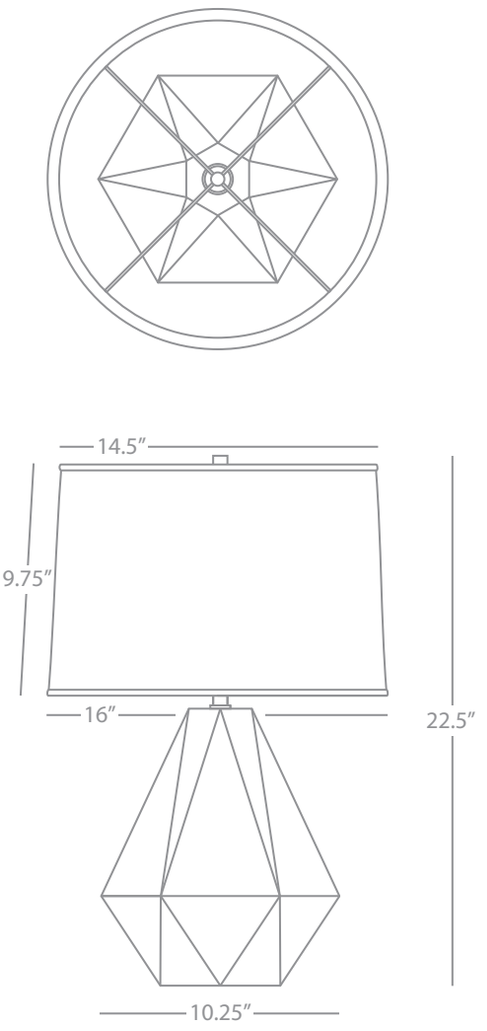

DELTA

935

Table Lamp

1 - 150W Max.
Bulb Type: A
Switch: 3-Way
Apple Glazed Ceramic
Polished Nickel Accents
Oyster Linen Shade

See Page 207 for Color Options



951



S950

Francesco

FRANCESCO

S950

Table Lamp

2 - 100W Max.
Bulb Type: A
Switch: Hi-Lo Pull Chains
Polished Nickel Finish
Black Leather Accent
Pearl Dupoini Fabric Shade

FINISH/SHADE OPTION:
950 Antique Brass/Camel Leather
Taupe Dupoini

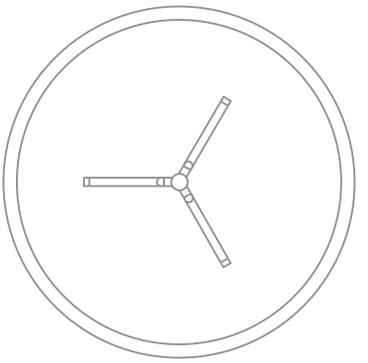

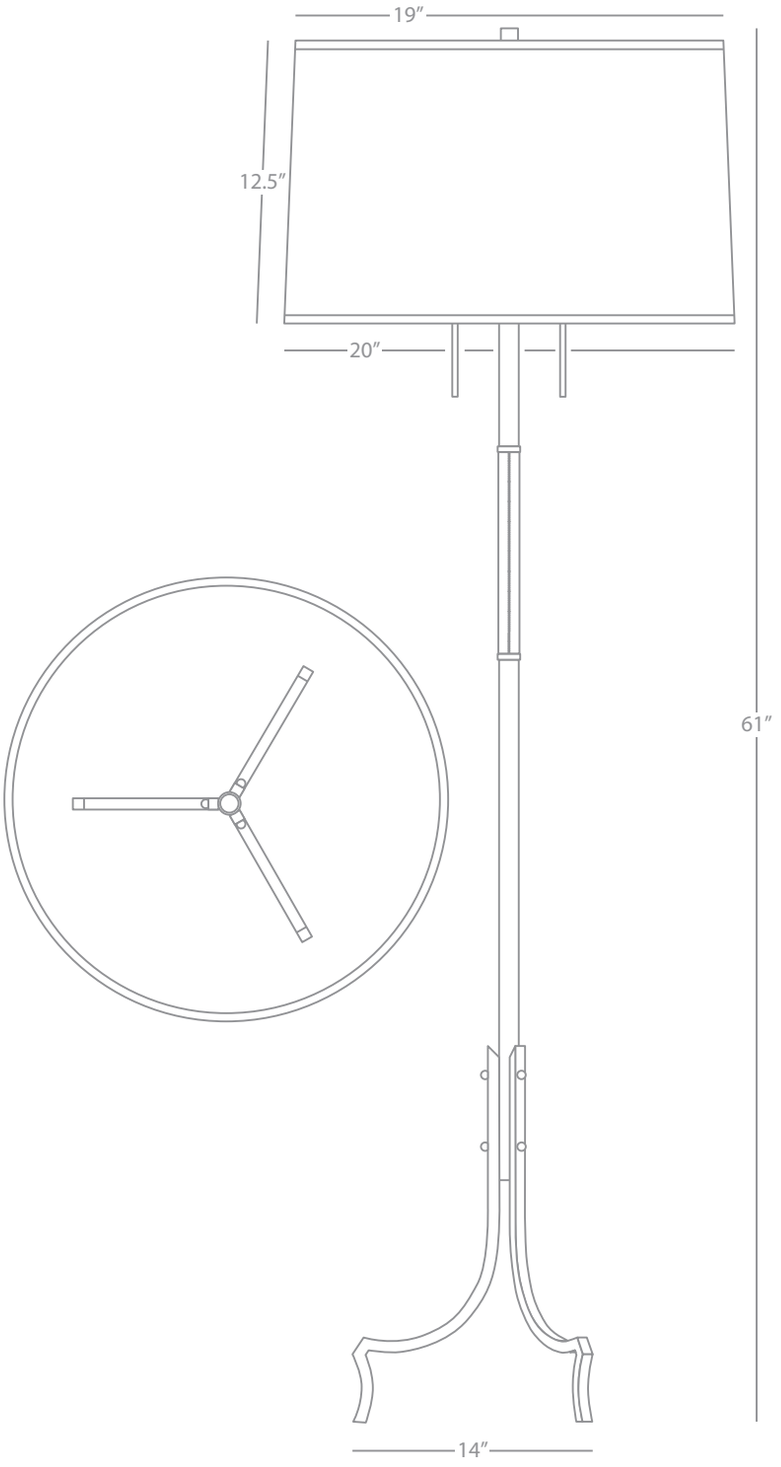

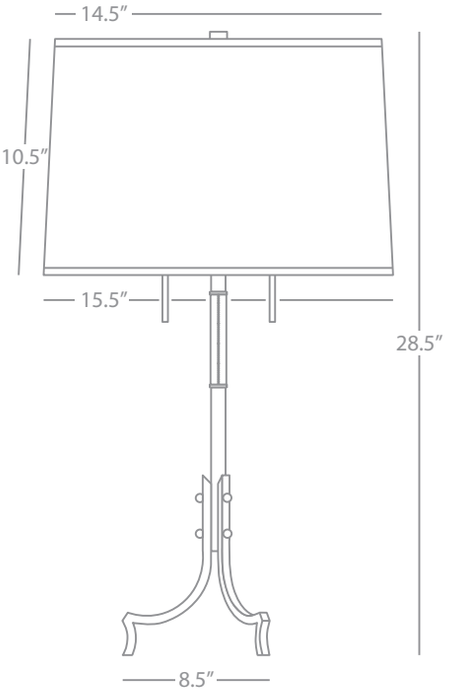

FRANCESCO

951

Floor Lamp

2 - 100W Max.
Bulb Type: A
Switch: Hi-Lo Pull Chains
Antique Brass Finish
Camel Leather Accent
Taupe Dupoini Fabric Shade

FINISH/SHADE OPTION:
S951 Polished Nickel/Black Leather
Pearl Dupoini

Audrey



LY980



ST980



PC980



MB980



MR980

Audrey

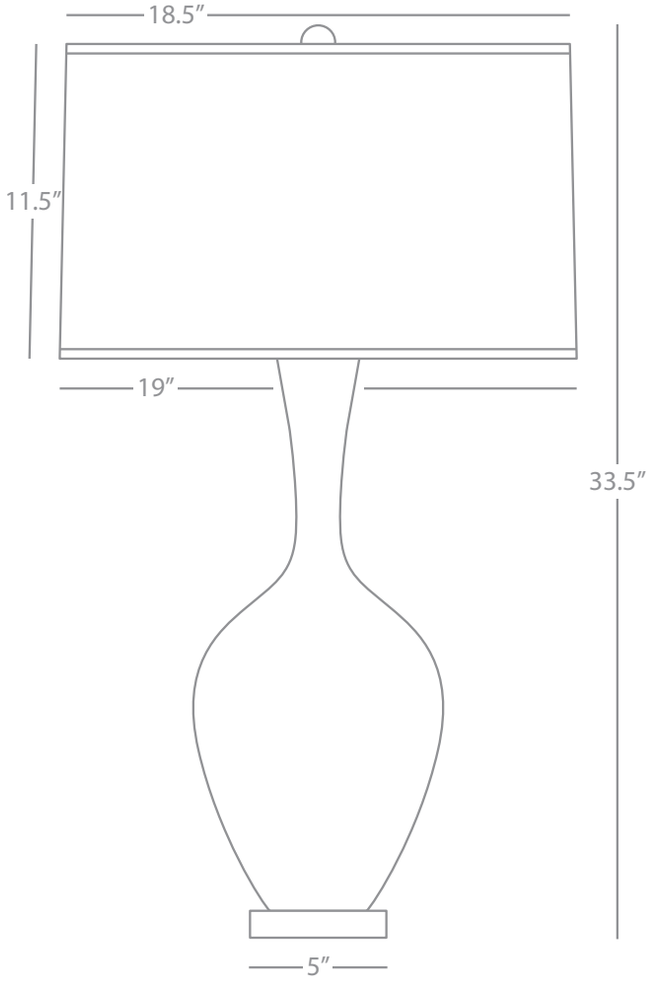

AUDREY

LY980

Table Lamp

1 - 150W Max.
Bulb Type: A
Switch: Hi-Lo Dimming
Lily Glazed Ceramic
Lucite Base
Fondine Fabric Shade

See Page 205 for Color Options



AM990



AP990



EG990



ST995



MB995

Harvey

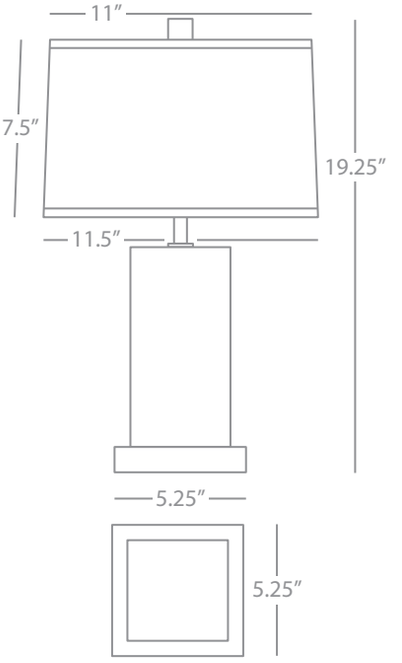

HARVEY

AM990

Accent Lamp

1 - 60W Max.
Bulb Type: G16.5, Candelabra
Switch: Hi-Lo Line Switch
Amethyst Glazed Ceramic
Lucite Base
Oyster Linen Shade w/
Self-Fabric Top Diffuser

See Page 206 for Color Options

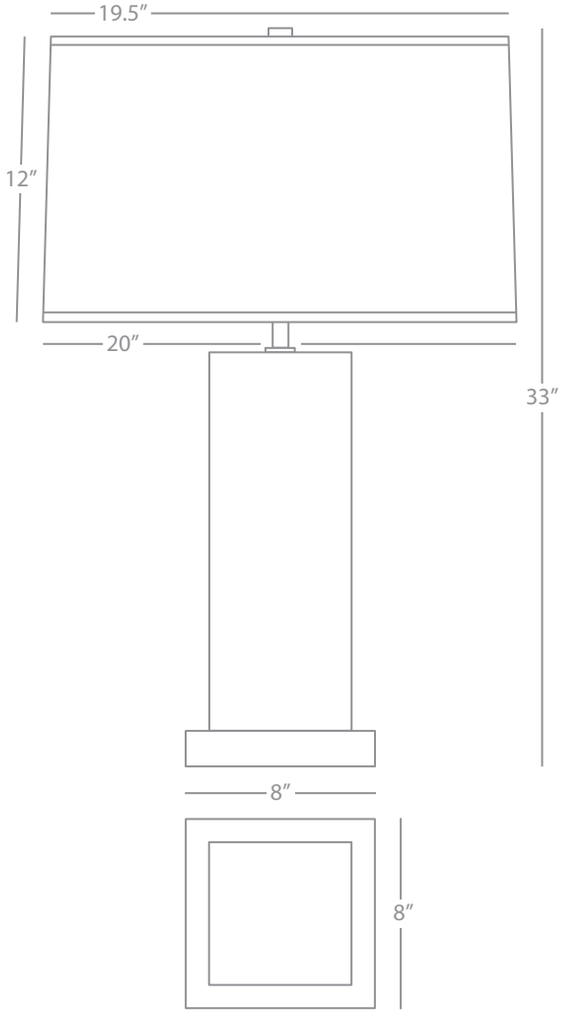

HARVEY

MB995

Table Lamp

1 - 150W Max.
Bulb Type: A
Switch: Hi-Lo Dimming
Midnight Blue Glazed Ceramic
Lucite Base
Oyster Linen Shade

See Page 206 for Color Options



CL993



LY991



ST991



BN993

June

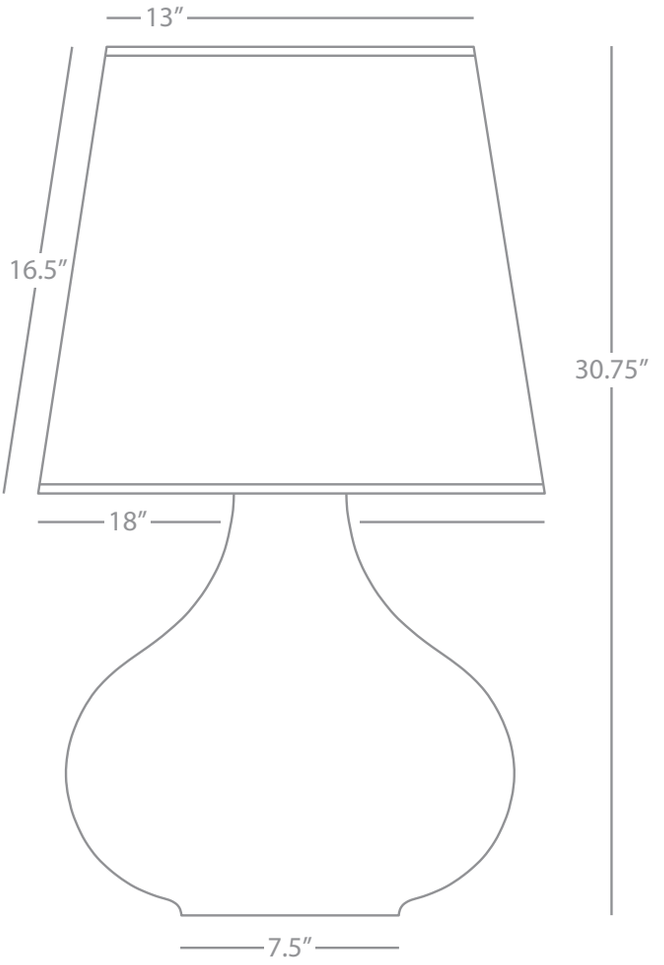

JUNE

CL993

Table Lamp

1 - 150W Max.
Bulb Type: A
Switch: Hi-Lo Dimming
Celadon Glazed Ceramic
Oyster Linen Shade

See Page 208 for Color/Shade Options



PC992



CI992



CR992



EG992

Athena

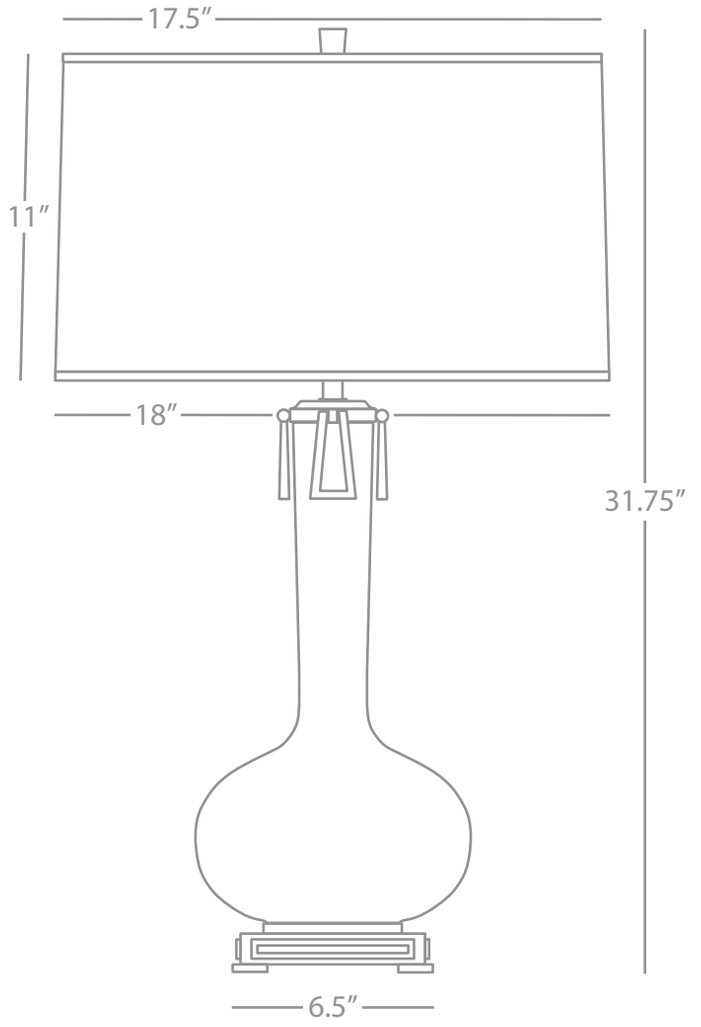

ATHENA

CI992

Table Lamp

1 - 150W Max.
Bulb Type: A
Switch: Hi-Lo Dimming
Citron Glazed Ceramic
Aged Brass Accents
Open Weave Heather Linen Shade

See Page 210 for Color Options



CI996



PC996



TE994



SU994



ST994

Pike

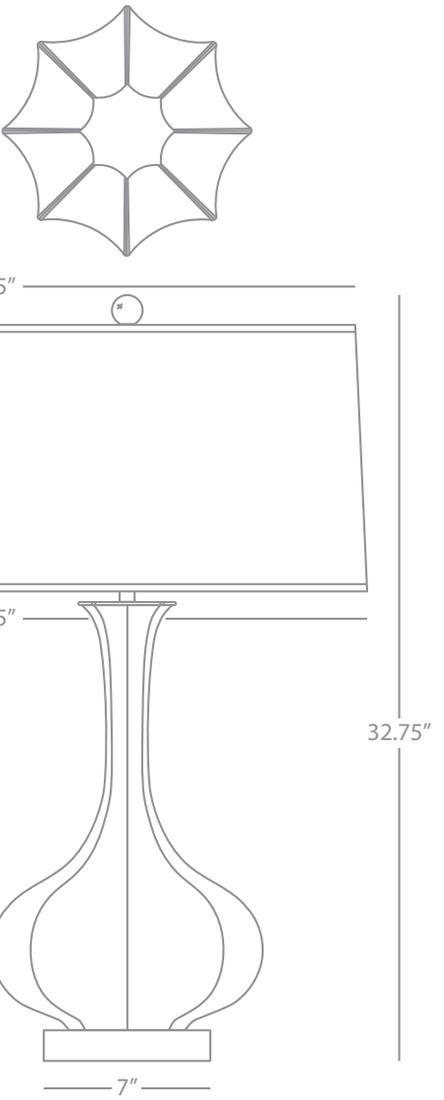

PIKE

CI996

Table Lamp

1 - 150W Max.
Bulb Type: A
Switch: Hi-Lo Dimming
Citron Glazed Ceramic
Lucite Base
Pearl Dupoini Fabric Shade

See Page 209 for Color Options

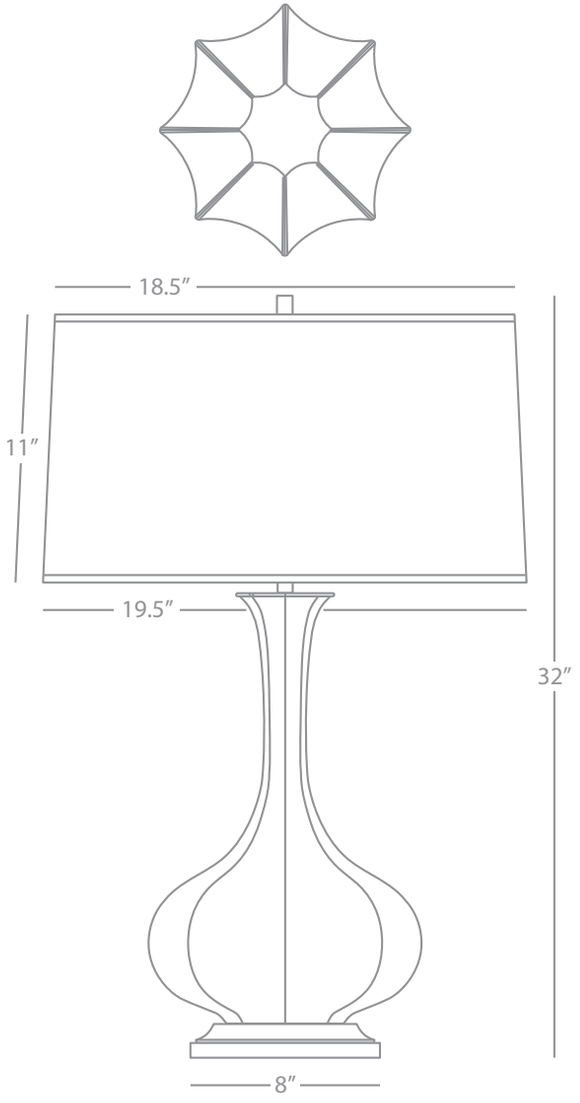

PIKE

ST994

Table Lamp

1 - 150W Max.
Bulb Type: A
Switch: Hi-Lo Dimming
Smokey Taupe Glazed Ceramic
Aged Brass Accents
Pearl Dupoini Fabric Shade

See Page 209 for Color Options



Z1001



1000



Z1005



S1002

Bling

BLING

Z1001
Sconce

2 - 60W Max.
Bulb Type: G16 Candelabra
Direct Wire Only
Deep Patina Bronze Finsih
Glass Drops

FINISH OPTIONS:
1001 Antique Brass
S1001 Polished Nickel

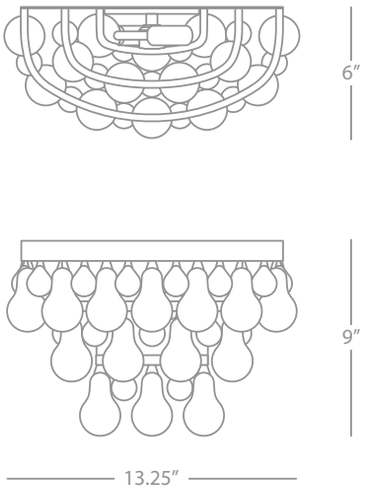

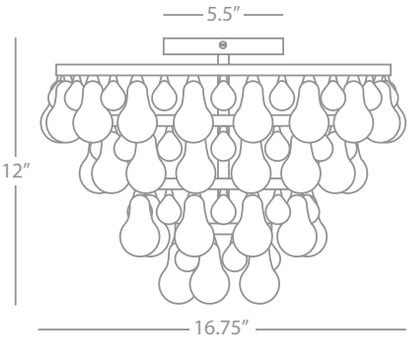

BLING

S1002
Flush Mount

2 - 60W Max.
Bulb Type: B, Medium Base
Direct Wire
Polished Nickel Finish
Glass Drops

FINISH OPTIONS:
1002 Antique Brass
Z1002 Deep Patina Bronze

BLING

Z1005
Buffet Table Lamp

2 - 60W Max.
Bulb Type: G16.5 Candelabra
Switch: Hi-Lo Line Switch
Deep Patina Bronze Finish
Glass Drops

FINISH OPTIONS:
1005 Antique Brass
S1005 Polished Nickel

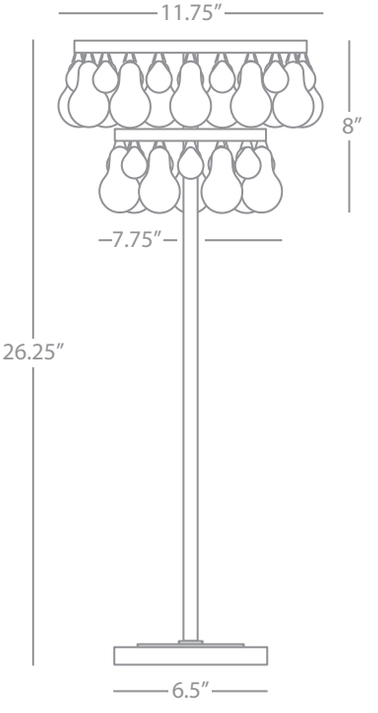

BLING

1000
Chandelier w/Convertible Double Canopy*

4 - 60W Max.
Bulb Type: B, Medium Base
Direct Wire Only
Antique Brass Finish
Glass Drops
Susp. Hardware: 3 Ft. Chain

FINISH OPTIONS:
S1000 Polished Nickel
Z1000 Deep Patina Bronze

*Can be converted to a semi-flush mount by mounting the center canopy directly to ceiling canopy

Chandelier

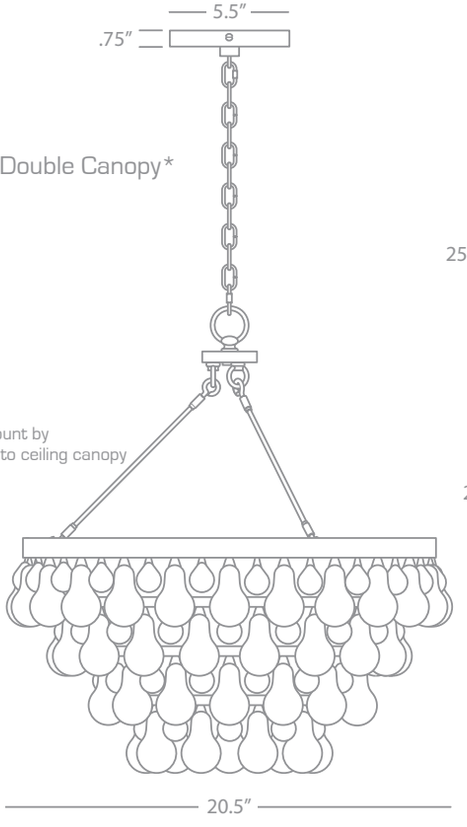

25.25″ - 61.25″ Adj.

Semi - Flush

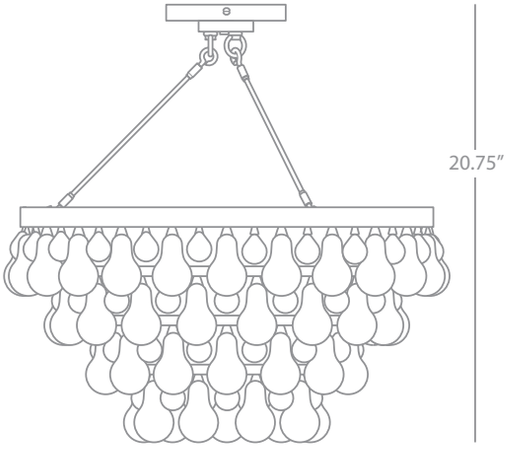



1004



Z1006



S1007

Bling

BLING

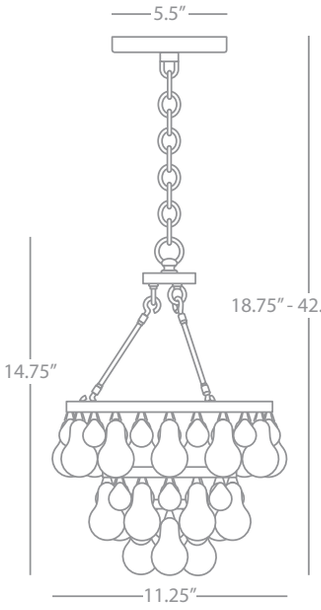

Z1006

Chandelier

2 - 60W Max.
Bulb Type: G16.5 Candelabra
Direct Wire
Deep Patina Bronze Finish
Glass Drops
Susp. Hardware: 3 Ft. Chain

FINISH OPTIONS:

1006	Antique Brass
S1006	Polished Nickel

BLING

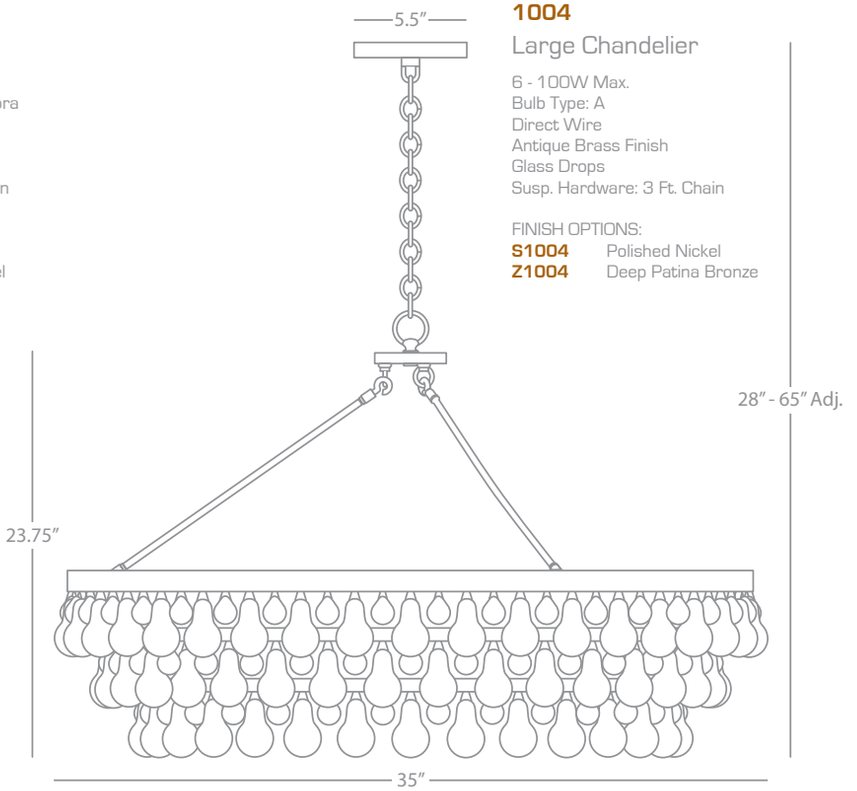

1004

Large Chandelier

6 - 100W Max.
Bulb Type: A
Direct Wire
Antique Brass Finish
Glass Drops
Susp. Hardware: 3 Ft. Chain

FINISH OPTIONS:

S1004	Polished Nickel
Z1004	Deep Patina Bronze

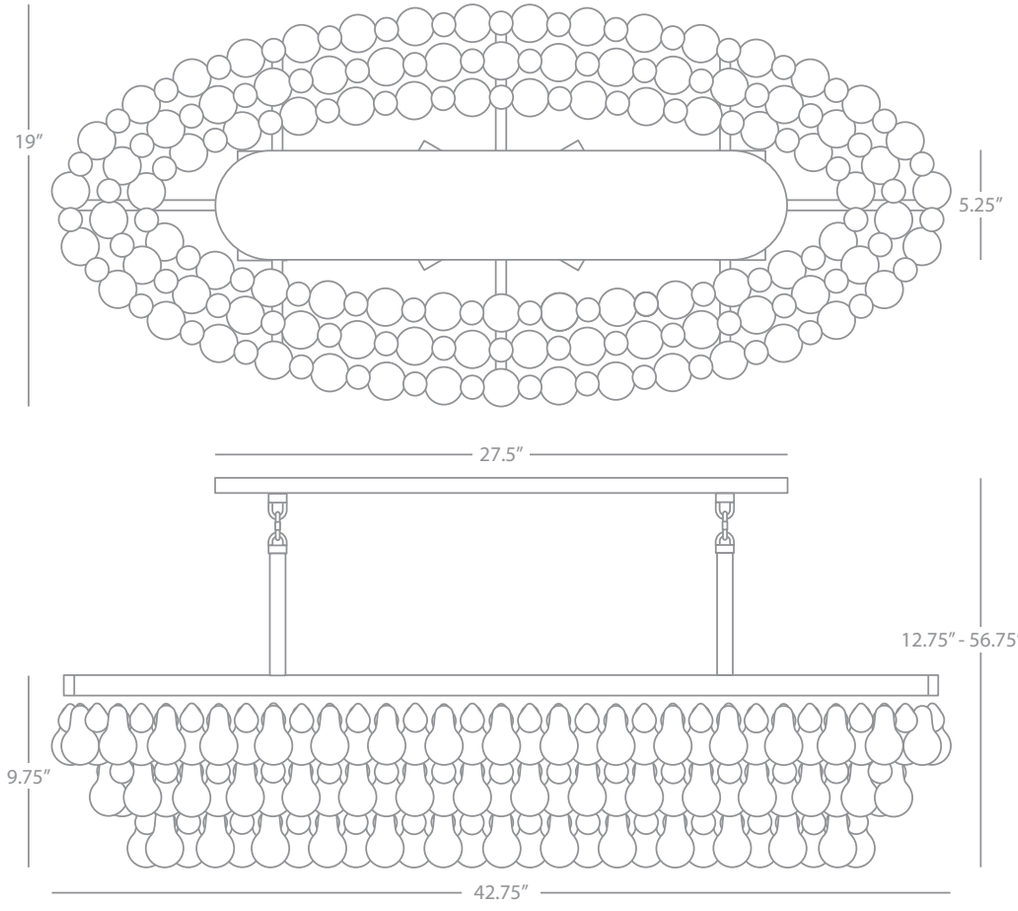

BLING

S1007

Large Chandelier

8 - 60W Max.
Bulb Type: A
Direct Wire
Polished Nickel Finish
Glass Drops
Susp. Hardware: 2 pcs. 5/8" x 6"
& 6 pcs. 5/8" x 12" Extensions

FINISH OPTIONS:

1007	Antique Brass
Z1007	Deep Patina Bronze





S1305



S1306

Anemone

ANEMONE

S1305

Flush Mount/Sconce

1 - 60W Max.
Bulb Type: A Silver Tip
Direct Wire Only
Polished Nickel Finish
Ships with 1 - 60W Silver Tip Bulb
[BUL01 See page 202]

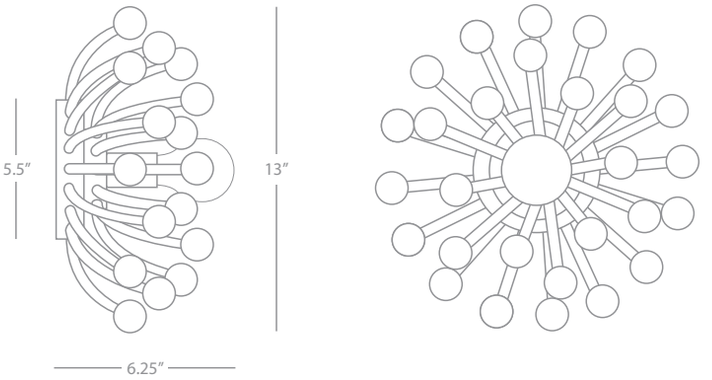

ANEMONE

S1306

Flush Mount/Sconce

5 - 60W Max.
Bulb Type: A Silver Tip
Direct Wire Only
Polished Nickel Finish
Ships with 5 - 60W Silver Tip Bulbs
[BUL01 (x 5) See page 202]

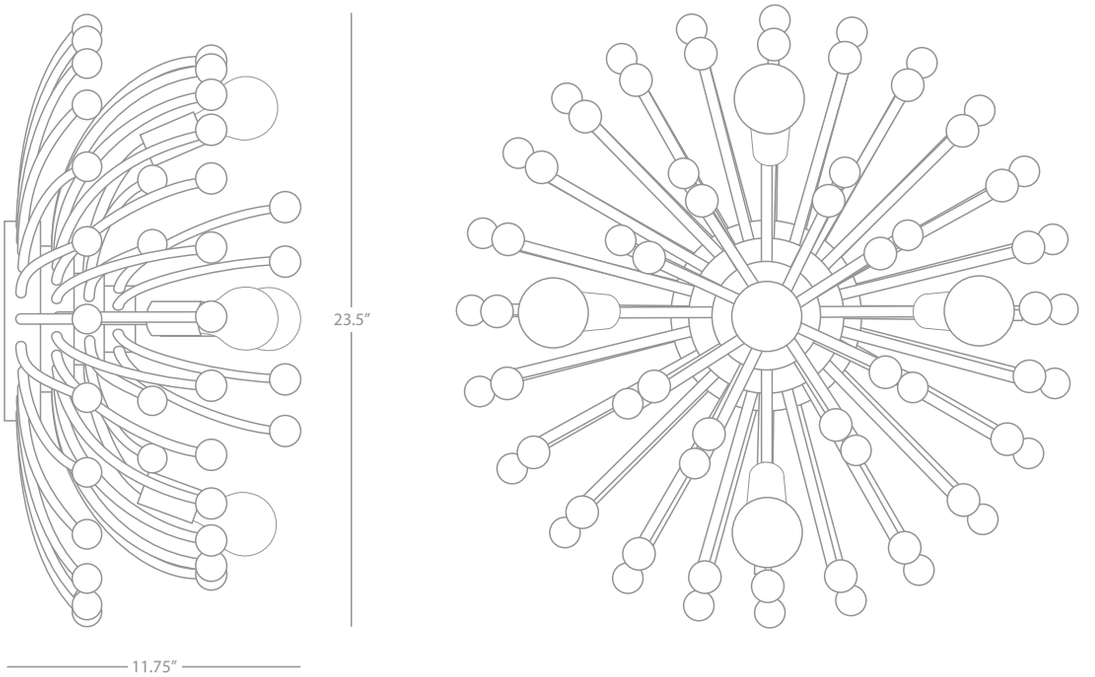



B1310



C1310



S1310



Z1310

Tyrone

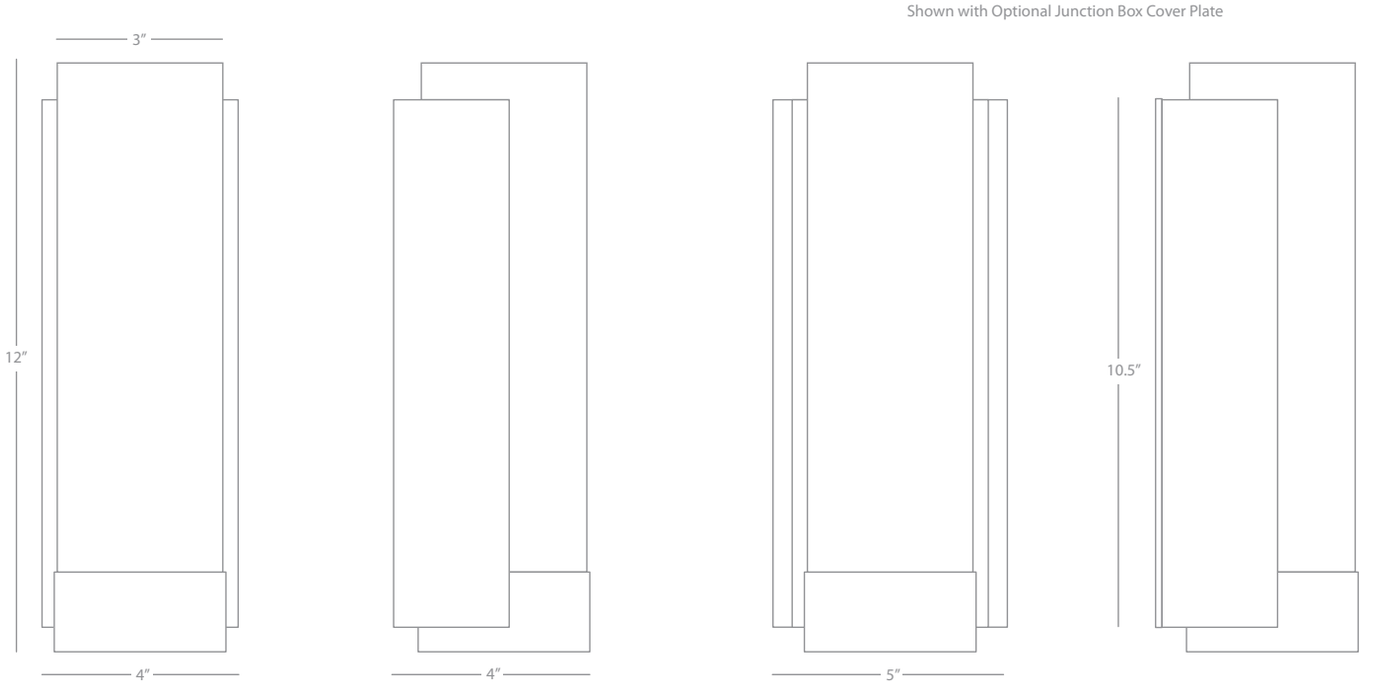

TYRONE

B1310
Wall Sconce

1 - 60W Max.
Bulb Type: A
Direct Wire Only
Antique Silver Finish
White Frosted Glass Shade

FINISH OPTIONS:
C1310 Polished Chrome
S1310 Polished Nickel
Z1310 Deep Patina Bronze

*Metal Junction Box Cover Plate in Matching Finish Included

Roderick



Z1315



B1311



S1311



C1311

Roderick

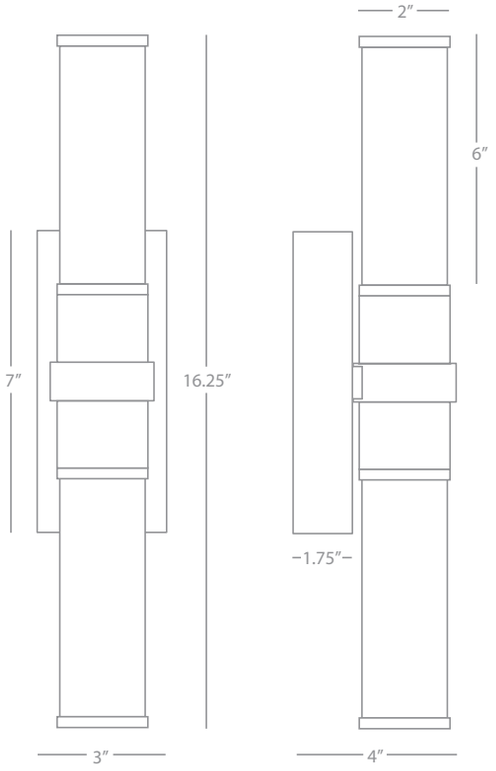

Shown with Optional Junction Box Cover Plate

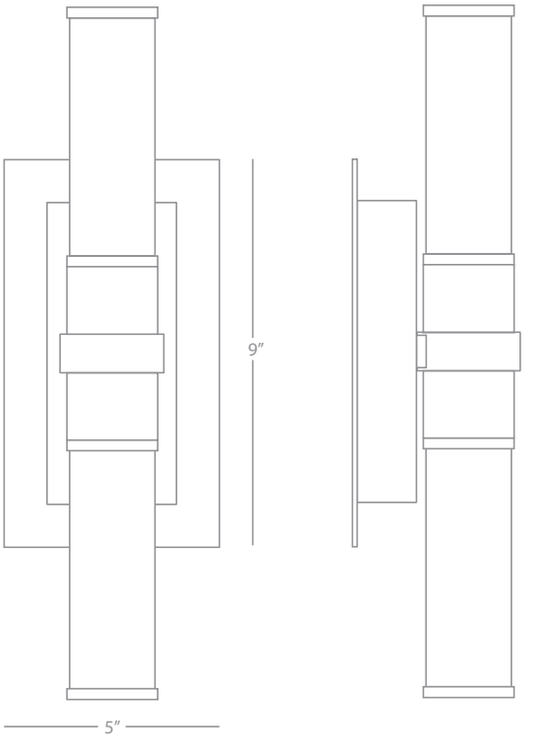

RODERICK

S1311

Bath Sconce - Fluorescent

2 - 7W Max.
Bulb Type: 2G7 Base
Direct Wire Only
Polished Nickel Finish over Brass/Zinc
White Frosted Glass Shades
Bulbs Included

FINISH OPTIONS/FLUORESCENT:

B1311	Antique Silver
C1311	Polished Chrome
Z1311	Deep Patina Bronze

*Metal Junction Box Cover Plate in Matching Finish Included

RODERICK

Z1315

Bath Sconce - Halogen

2 - 30W Max.
Bulb Type: Bi-Pin, 12V G4 Base
Direct Wire Only
Deep Patina Bronze Finish over Brass/Zinc
White Frosted Glass Shades
Bulbs Included

FINISH OPTIONS/HALOGEN:

B1315	Antique Silver
C1315	Polished Chrome
S1315	Polished Nickel

*Metal Junction Box Cover Plate in Matching Finish Included



B1316



Z1316



C1317



S1314



Z1314

Roderick

RODERICK

B1316

10" Dia. Flush Mount

1 - 60W Max.
Bulb Type: B, Candelabra
Direct Wire Only
Antique Silver Finish
White Frosted Glass Shade

FINISH OPTIONS:

C1316 Polished Chrome
S1316 Polished Nickel
Z1316 Deep Patina Bronze

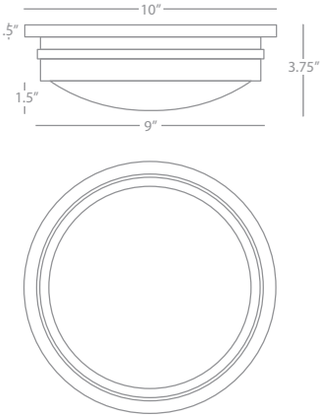

RODERICK

C1317

17" Dia. Flush Mount

3 - 60W Max.
Bulb Type: B11 Torpedo
Direct Wire Only
Polished Chrome
White Frosted Glass Shade

FINISH OPTIONS:

B1317 Antique Silver
S1317 Polished Nickel
Z1317 Deep Patina Bronze

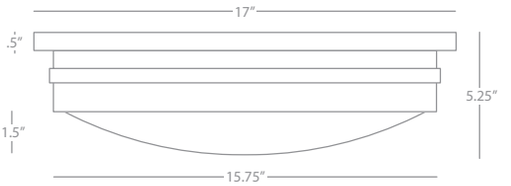

RODERICK

Z1314

13.5" Dia. Flush Mount

2 - 60W Max.
Bulb Type: B11 Torpedo
Direct Wire Only
Deep Patina Bronze
White Frosted Glass Shade

FINISH OPTIONS:

B1314 Antique Silver
C1314 Polished Chrome
S1314 Polished Nickel

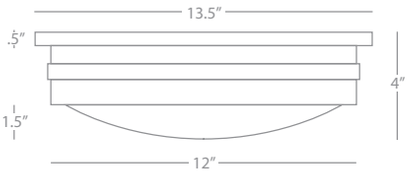



S1319



1319



Z1318



C1318



B1318

Bryce

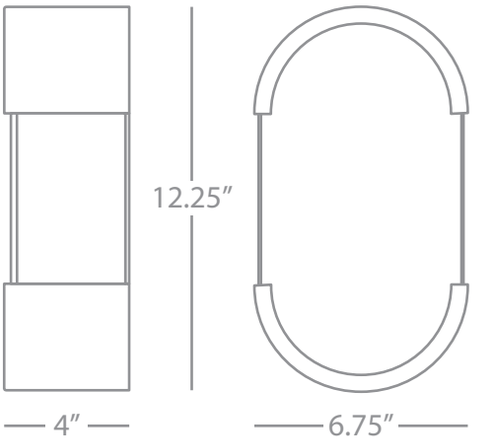

BRYCE

B1318

Wall Sconce

2 - 60W Max.
Bulb Type: B, Medium Base
Direct Wire Only
Brushed Nickel Finish
White Frosted Glass Shade

FINISH OPTIONS:

1318	Antique Brass
C1318	Polished Chrome
S1318	Polished Nickel
Z1318	Deep Patina Bronze

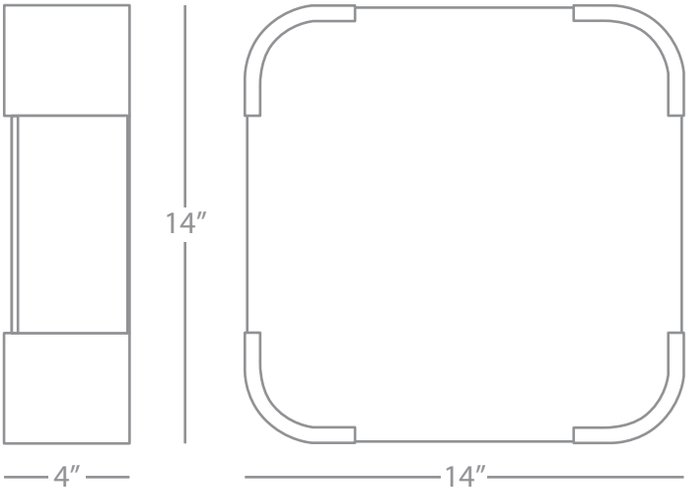

BRYCE

1319

Flush Mount

3 - 60W Max.
Bulb Type: B, Medium Base
Direct Wire
Antique Brass Finish
White Frosted Glass Shade

FINISH OPTIONS:

B1319	Brushed Nickel
C1319	Polished Chrome
S1319	Polished Nickel
Z1319	Deep Patina Bronze



C1324



1324



B1325

Halo

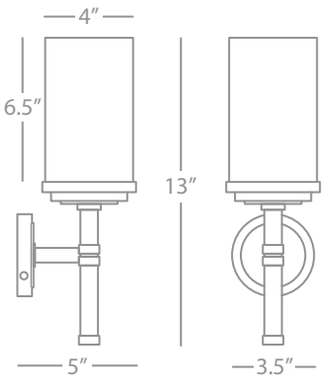

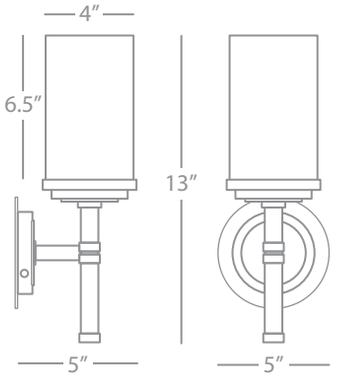

Shown with Optional Junction Box Cover Plate

HALO

1324

Single Sconce

1 - 60W Max.
Bulb Type: A
Direct Wire Only
Brushed Brass Finish w/
Polished Brass Accents
Cased White Glass Shade

FINISH OPTIONS:

B1324 Brushed Nickel Finish w/ Polished Nickel Accents

C1324 Brushed Chrome Finish w/ Polished Chrome Accents

*Metal Junction Box Cover Plate in Matching Finish Included

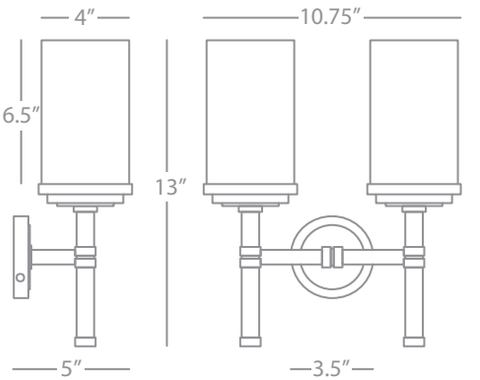

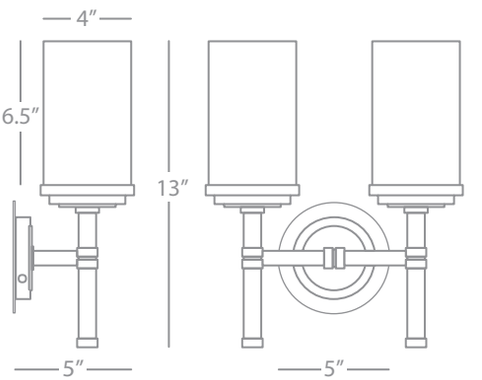

Shown with Optional Junction Box Cover Plate

HALO

B1325

Double Sconce

2 - 60W Max.
Bulb Type: A
Direct Wire Only
Brushed Nickel Finish w/
Polished Nickel Accents
Cased White Glass Shades

FINISH OPTIONS:

1325 Brushed Brass Finish w/ Polished Brass Accents

C1325 Brushed Chrome Finish w/ Polished Chrome Accents

*Metal Junction Box Cover Plate in Matching Finish Included



S1338



Z1339



S1335



C1338



Z1333



C1334

Bradley

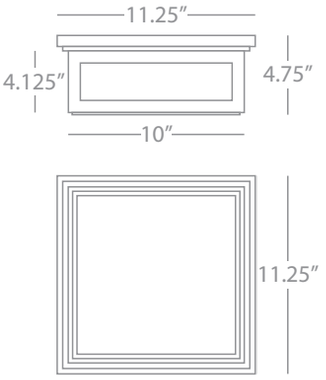

BRADLEY

C1338

Small Flush Mount

2 - 40W Max.
Bulb Type: A, Torpedo
Direct Wire
Polished Chrome Finish
White Glass Shade

FINISH OPTIONS:
S1338 Polished Nickel
Z1338 Deep Patina Bronze

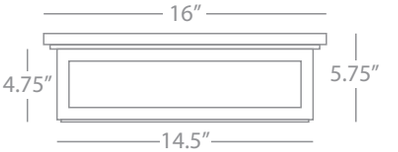

BRADLEY

Z1339

Large Flush Mount

3 - 40W Max.
Bulb Type: A, Torpedo
Direct Wire
Deep Patina Bronze Finish
White Glass Shade

FINISH OPTIONS:
C1339 Polished Chrome
S1339 Polished Nickel





BRADLEY

S1335

Large Wall Sconce

4 - 60W Max.
Bulb Type: B11 Torpedo
Direct Wire Only
Polished Nickel Finish
White Glass Shade

FINISH OPTIONS:
C1335 Polished Chrome
Z1335 Deep Patina Bronze

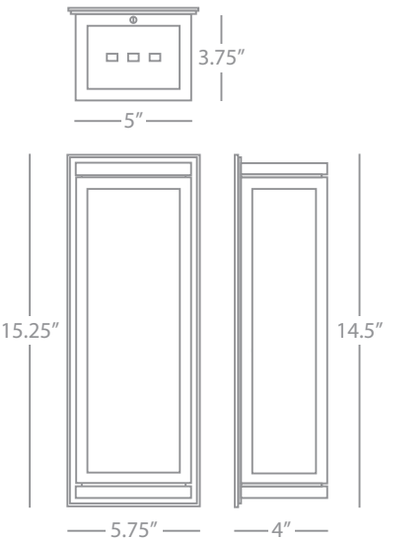

BRADLEY

Z1333

Small Wall Sconce

2 - 60W Max.
Bulb Type: B11 Torpedo
Direct Wire Only
Deep Patina Bronze Finish
White Glass Shade

FINISH OPTIONS:
C1333 Polished Chrome
S1333 Polished Nickel

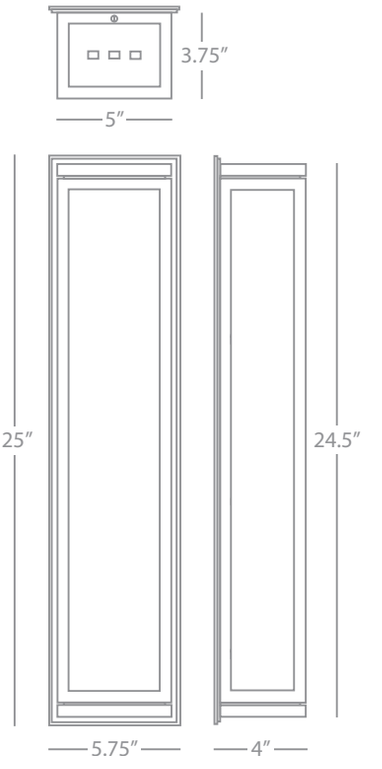

BRADLEY

C1334

Medium Wall Sconce

3 - 60W Max.
Bulb Type: B11 Torpedo
Direct Wire Only
Polished Chrome Finish
White Glass Shade

FINISH OPTIONS:
S1334 Polished Nickel
Z1334 Deep Patina Bronze



1505



P1500



Z1504DBZ



B1503ALT



Z1502XXX

Kinetic

KINETIC

Z1504DBZ
Swing Arm Sconce

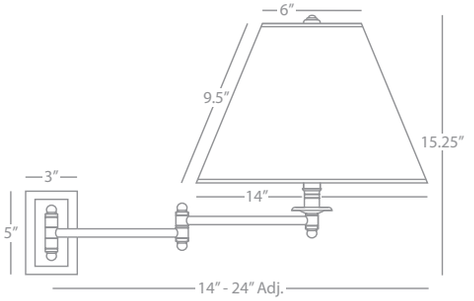

1 - 150W Max.
Bulb Type: A
Switch: 3-Way
24" Cord Cover/Direct Wire
Deep Patina Bronze Finish
Natural Side Pleat Fabric Shade

FINISH/SHADE OPTIONS:

1504	Antique Brass Natural Side Pleat Fabric Shade
1504ALT	Antique Brass Oyster Linen Shade
1504X	Antique Brass Ascot Bone Fabric Shade
B1504ALT	Brushed Chrome Oyster Linen Shade
B1504BRC	Brushed Chrome Pearl White Side Pleat Fabric Shade
B1504XXX	Brushed Chrome Ascot White Fabric Shade
Z1504ALT	Deep Patina Bronze Oyster Linen Shade
Z1504XXX	Deep Patina Bronze Translucent Flax Parchment Shade

KINETIC

Z1502XXX
Adjustable Swing Arm Table Lamp

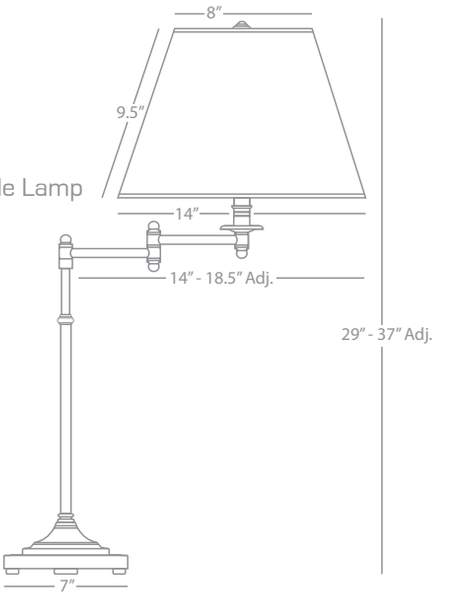

1 - 150W Max.
Bulb Type: A
Switch: 3-Way
Deep Patina Bronze Finish
Translucent Flax Parchment Shade

SHADE OPTIONS:

Z1502ALT	Oyster Linen
Z1502DBZ	Natural Side Pleat

KINETIC

P1500
Adjustable Pharmacy Task Table Lamp

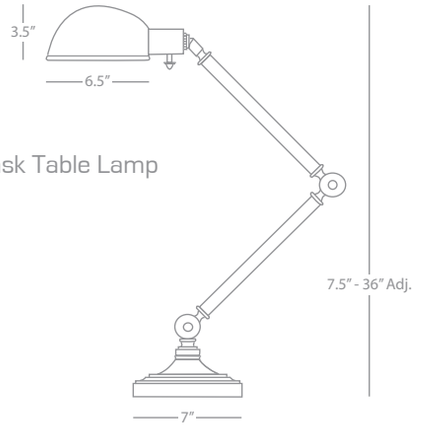

1 - 60W Max.
Bulb Type: A
Switch: Hi-Lo Dimming
Patina Nickel Finish
Metal Shade

FINISH OPTIONS:

1500	Antique Brass
B1500BRC	Brushed Chrome
Z1500DBZ	Deep Patina Bronze

KINETIC

B1503ALT
Adjustable Column Table Lamp

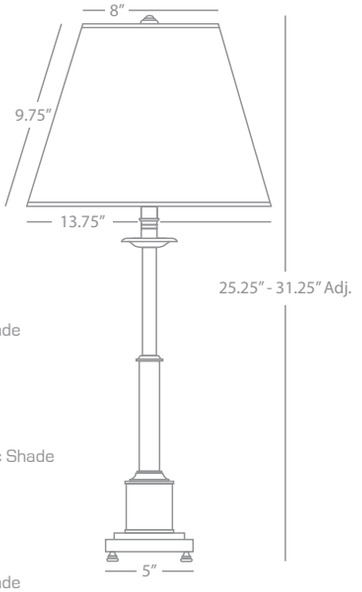

1 - 150W Max.
Bulb Type: A
Switch: 3-Way
Brushed Chrome Finish
Oyster Linen Shade

FINISH/SHADE OPTIONS:

1503	Antique Brass Natural Side Pleat Fabric Shade
1503ALT	Antique Brass Oyster Linen Shade
1503X	Antique Brass Ascot Bone Fabric Shade
B1503BRC	Brushed Chrome Pearl White Side Pleat Fabric Shade
B1503XXX	Brushed Chrome Ascot White Fabric Shade
Z1503ALT	Deep Patina Bronze Oyster Linen Shade
Z1503DBZ	Deep Patina Bronze Natural Side Pleat Fabric Shade
Z1503XXX	Deep Patina Bronze Translucent Flax Parchment Shade

KINETIC

1505
Adjustable Pharmacy Task Floor Lamp

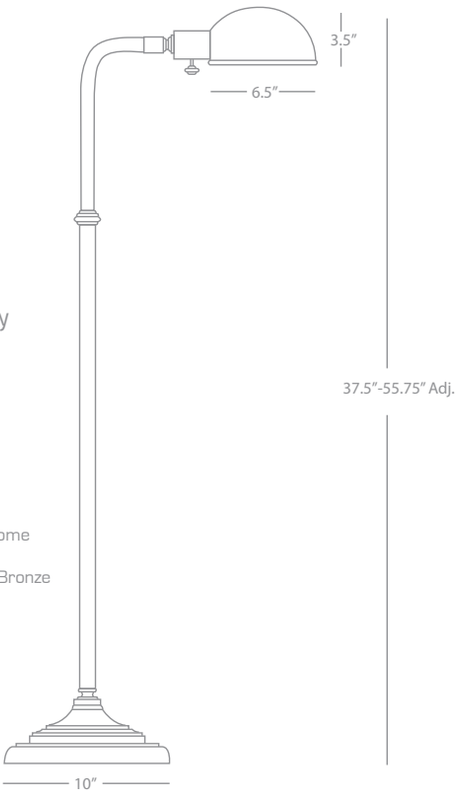

1 - 60W Max.
Bulb Type: A
Switch: Hi-Lo Dimming
Antique Brass Finish
Metal Shade

FINISH OPTIONS:

B1505BRC	Brushed Chrome
P1505	Patina Nickel
Z1505DBZ	Deep Patina Bronze



D1511

1510



Z1511

Jackson

JACKSON

1510

Table Lamp

1 - 100W Max.
Bulb Type: A
Switch: Hi-Lo Line Switch
Aged Brass Finish
Metal Shade

FINISH OPTIONS:
D1510 Dark Antique Nickel
Z1510 Deep Patina Bronze

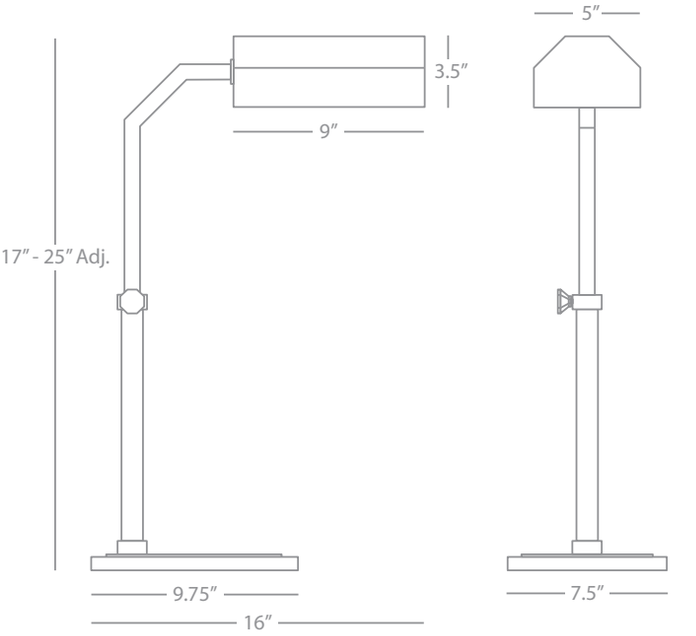

JACKSON

D1511

Floor Lamp

1 - 100W Max.
Bulb Type: A
Switch: Full Range Dimmer Foot Switch
Dark Antique Nickel Finish
Metal Shade

FINISH OPTIONS:
1511 Aged Brass
Z1511 Deep Patina Bronze

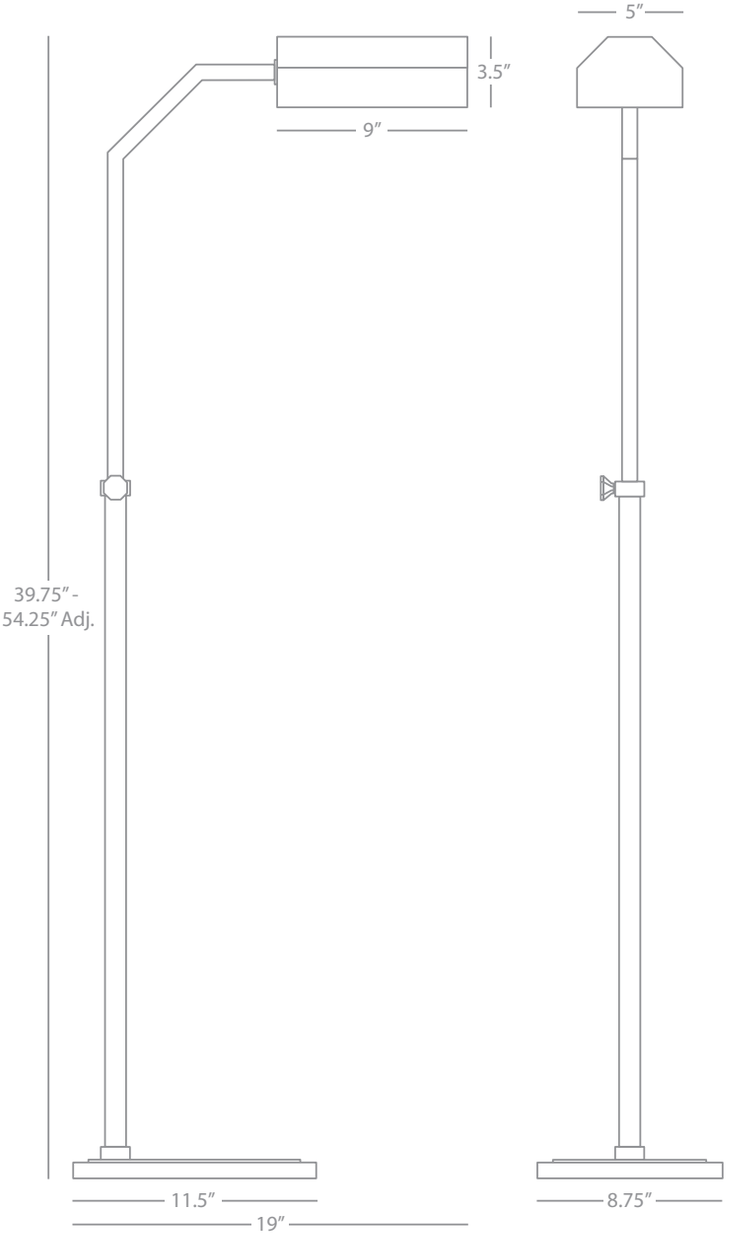



1514



1515

Fineas

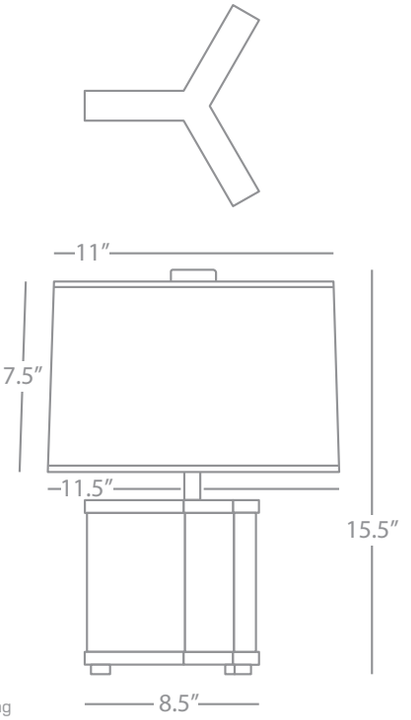

FINEAS

1515

Accent Lamp

1 - 60W Max.
Bulb Type: A
Switch: Hi-Lo Dimming
Travertine Stone Base
Aged Brass Accents
Fondine Fabric Shade w/
Self-Fabric Top Diffuser

FINISH/SHADE OPTIONS:

1513	Alabaster Stone Base Fondine Fabric
1513B	Alabaster Stone Base Black Opaque Parchment w/ White Lining
1515B	Travertine Stone Base Black Opaque Parchment w/ White Lining

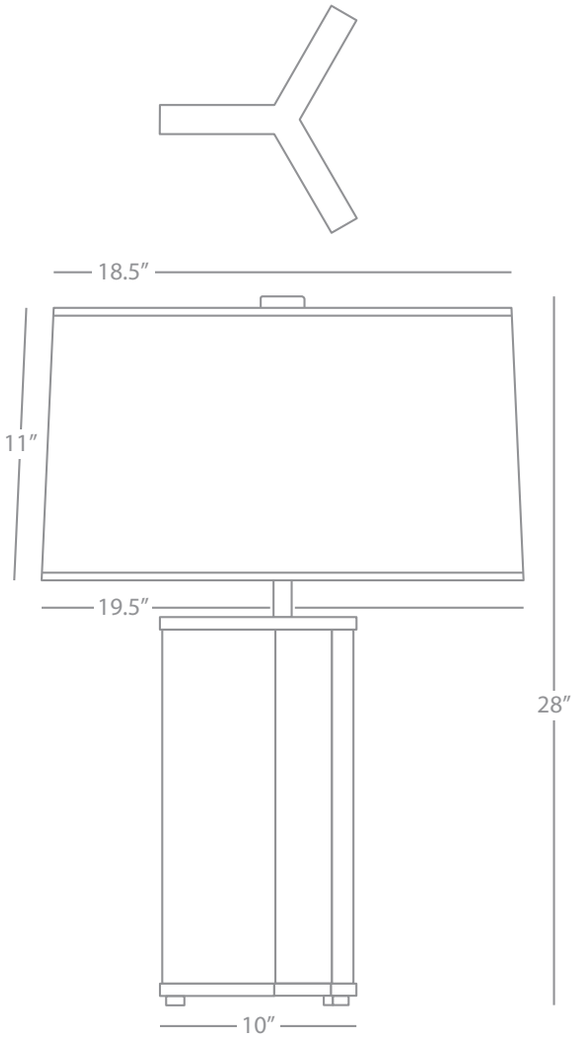

FINEAS

1514

Table Lamp

1 - 150W Max.
Bulb Type: A
Switch: Hi-Lo Dimming
Alabaster Stone Base
Aged Brass Accents
Fondine Fabric Shade

FINISH/SHADE OPTIONS:

1514B	Alabaster Stone Base Black Opaque Parchment w/ White Lining
1516	Travertine Stone Base Fondine Fabric
1516B	Travertine Stone Base Black Opaque Parchment w/ White Lining

Wilma



1517



1517B

Wilma

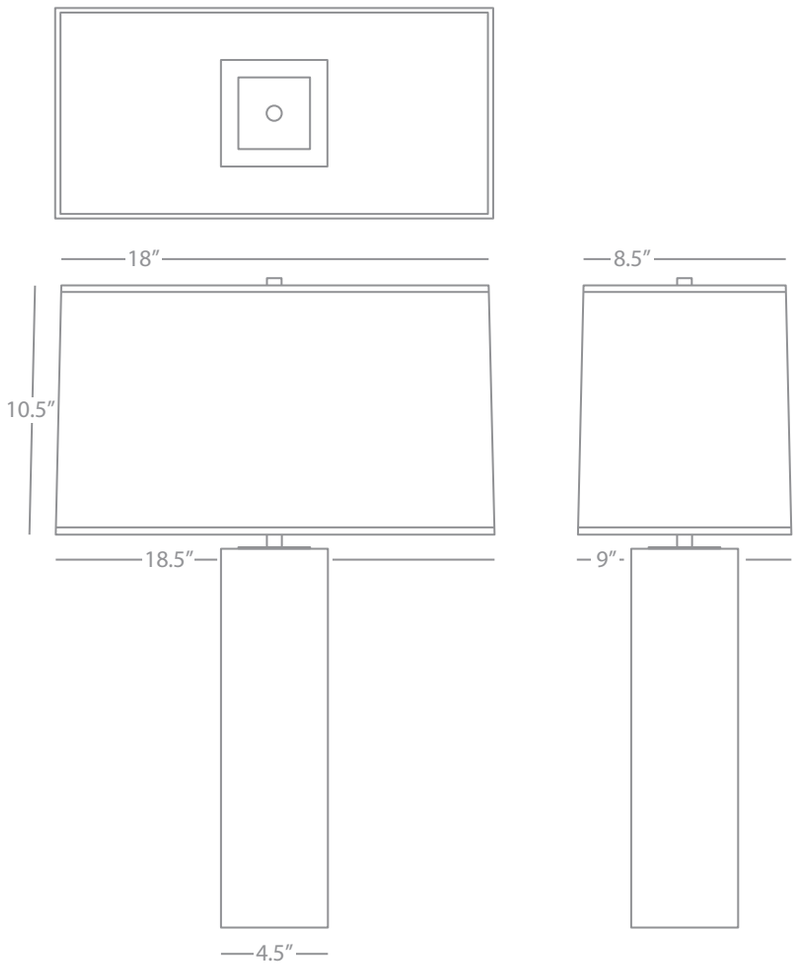

WILMA

1517

Table Lamp

1 - 150W Max.
Bulb Type: A
Switch: Hi-Lo Dimming
Honed Travertine Stone Base
Aged Brass Accents
Rectangular Fondine Fabric Shade

SHADE OPTION:

1517B Black Painted Opaque Parchment Shade w/ Matte Gold Lining



1574



1573



1545



1572



1570B



1541

Addison

ADDISON

1574
Pendant

3 - 100W Max.
Bulb Type: A
Direct Wire
Weathered Brass Finish
Taupe Dupioni Fabric Shade
w/ Decorative Metal Band
21.75" Dia. White Acrylic Diffuser
Susp. Hardware: 1 pc. 5/8" x 6" &
3 pcs. 5/8" x 12" Extensions

FINISH/SHADE OPTION:
1544 Patina Nickel
Pearl Dupoini

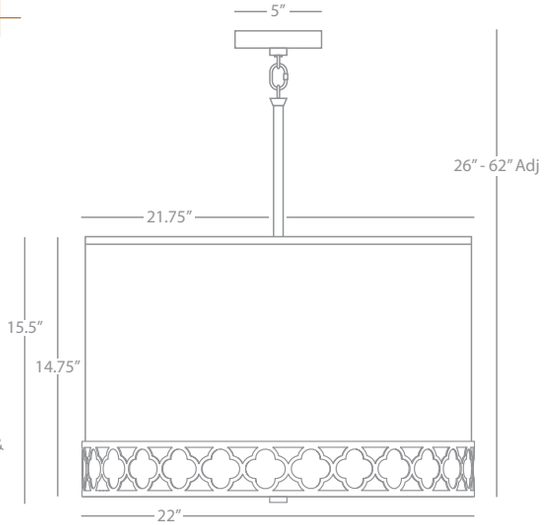

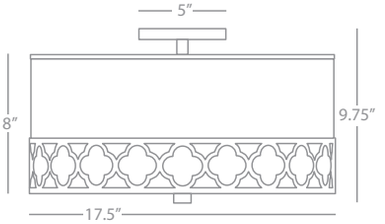

ADDISON

1545
Semi-Flush Mount

2 - 100W Max.
Bulb Type: A
Direct Wire
Patina Nickel Finish
Pearl Dupioni Fabric Shade
w/ Decorative Metal Band
17.5" Dia. White Acrylic Diffuser

FINISH/SHADE OPTION:
1575 Weathered Brass
Taupe Dupoini

ADDISON

1570B
Table Lamp

1 - 150W Max.
Bulb Type: A
Switch: Hi-Lo Dimming
Weathered Brass Finish w/
Antique Mirror Accents
Black Painted Opaque Parchment Shade w/
Matte Gold Lining

FINISH/SHADE OPTIONS:
1570 Weathered Brass
Taupe Dupioni
1540 Patina Nickel
Pearl Dupioni
1540B Patina Nickel
Black Painted Opaque Parchment
w/ Matte Silver Lining

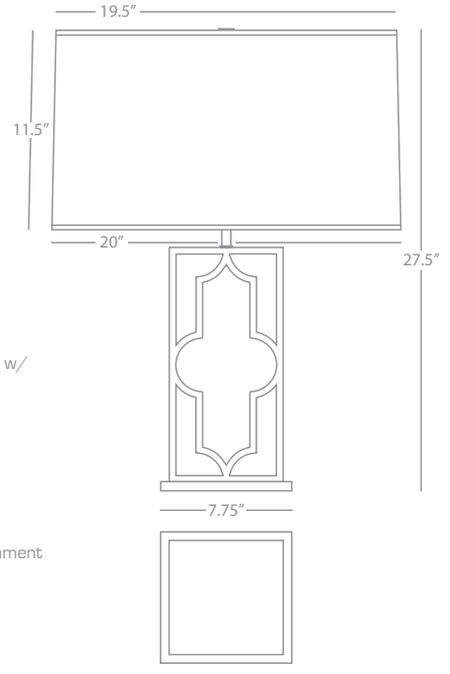

ADDISON

1572
Wall Sconce

1 - 60W Max.
Bulb Type: B, Candelabra
Direct Wire Only
Weathered Brass Finish w/
Antique Mirrored Accents
Clear Glass Shade Panels

FINISH OPTION:
1542 Patina Nickel

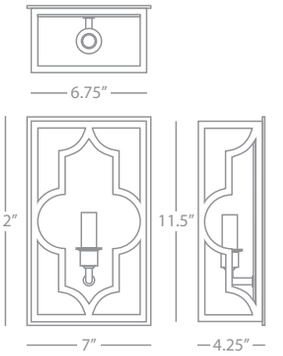

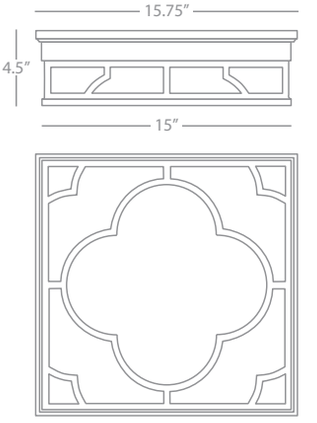

ADDISON

1541
Wide Table Lamp

2 - 100W Max.
Bulb Type: A
Switch: On-Off Pull Chains
Patina Nickel Finish w/
Antique Mirror Accents
Rectangular Pearl Dupoini Fabric Shade

FINISH/SHADE OPTIONS:
1541B Patina Nickel
Black Painted Opaque Parchment
w/ Matte Silver Lining
1571 Weathered Brass
Taupe Dupoini Fabric
1571B Weathered Brass
Black Painted Opaque Parchment
w/ Matte Gold Lining

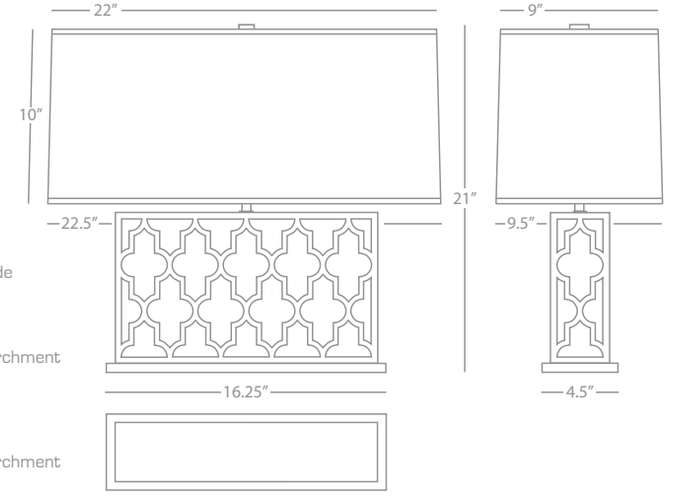

ADDISON

1573
Flush Mount

2 - 60W Max.
Bulb Type: A
Direct Wire
Weathered Brass Finish
White Glass Shade Panels

FINISH OPTION:
1543 Patina Nickel



1553

Astro

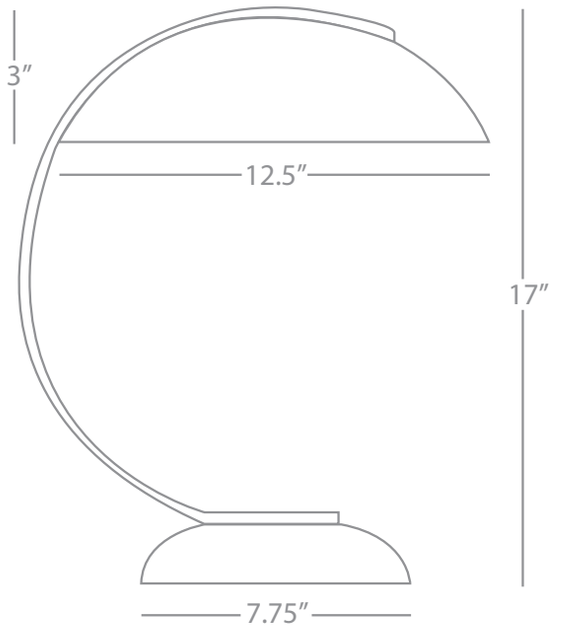

ASTRO

1553

"C" Desk Lamp

1 - 100W Max.
Bulb Type: A
Switch: Hi-Lo Dimming
Brushed Chrome
Metal Shade



Z1963

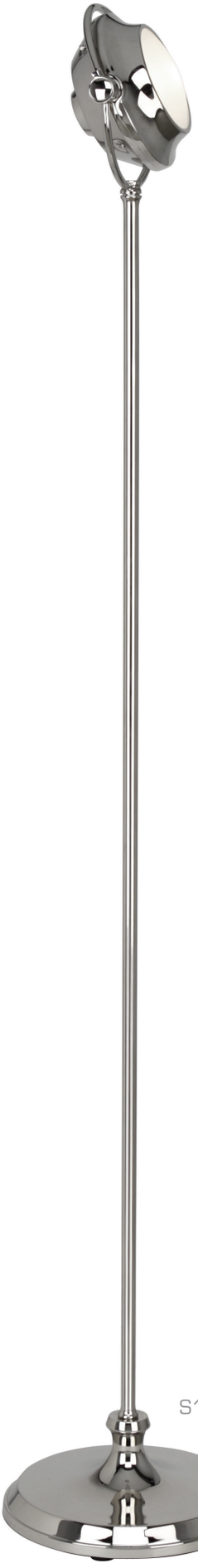

S1562



S1564



1563



Z1561

Iris

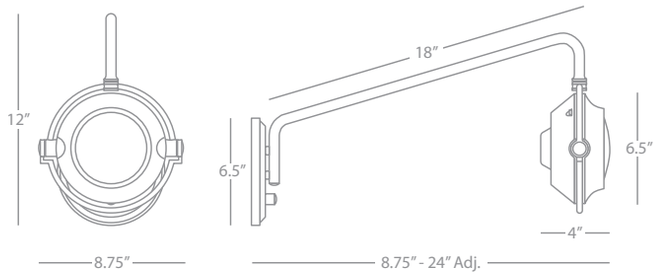

IRIS

S1564
Swing Arm Sconce

1 - 50W Max.
Bulb Type: GY8 Bi-Pin 120V Halogen
Switch: Hi-Lo Dimmimg
24" Cord Cover/Direct Wire
Polished Nickel Finish
Metal Shade w/ Frosted Glass Diffuser

FINISH OPTIONS:
1564 Antique Brass
Z1564 Deep Patina Bronze

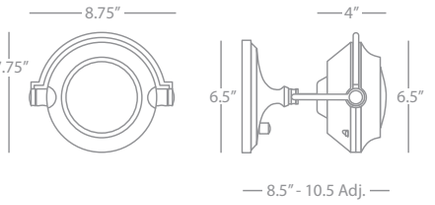

IRIS

1563
Wall Sconce

1 - 50W Max.
Bulb Type: GY8 Bi-Pin 120V Halogen
Switch: Hi-Lo Dimming
24" Cord Cover/Direct Wire
Antique Brass Finish
Metal Shade w/ Frosted Glass Diffuser

FINISH OPTIONS:
S1563 Polished Nickel
Z1563 Deep Patina Bronze

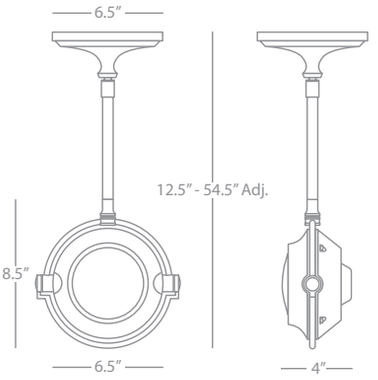

IRIS

Z1963
Pendant

1 - 50W Max.
Bulb Type: GY8 Bi-Pin 120V Halogen
Direct Wire
Deep Patina Bronze Finish
Metal Shade w/ Frosted Glass Diffuser
Susp. Hardware: 1 pc. 5/8" x 6" &
3 pcs. 5/8" x 12" Extensions

FINISH OPTIONS:
1963 Antique Brass
S1963 Polished Nickel

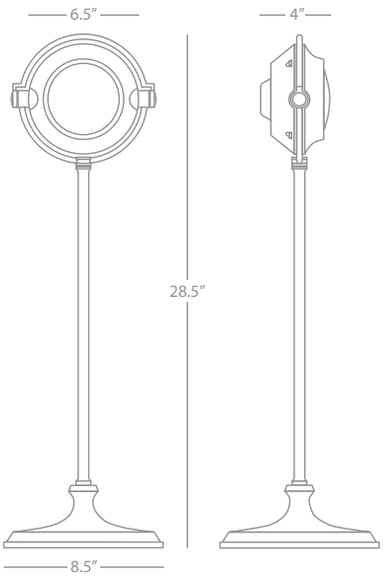

IRIS

Z1561
Table Lamp

1 - 50W Max.
Bulb Type: GY8 Bi-Pin 120V Halogen
Switch: Hi-Lo Line Switch
Deep Patina Bronze Finish
Metal Shade w/ Frosted Glass Diffuser

FINISH OPTIONS:
1561 Antique Brass
S1561 Polished Nickel

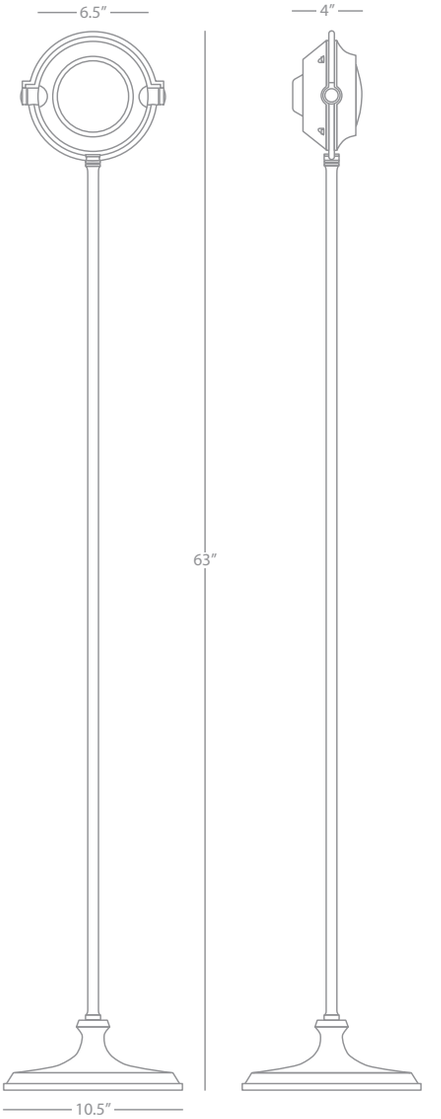

IRIS

S1562
Floor Lamp

1 - 50W Max.
Bulb Type: GY8 Bi-Pin 120V Halogen
Switch: Hi-Lo Foot Switch
Polished Nickel Finish
Metal Shade w/ Frosted Glass Diffuser

FINISH OPTIONS:
1562 Antique Brass
Z1562 Deep Patin Bronze



S1566



S1582



S1567



S1581



S1580

Apollo

APOLLO

S1582

Small Pendant

1 - 60W Max.
Bulb Type: A
Direct Wire
Polished Nickel Finish w/
Charcoal Gray Painted Accents
Metal Shade w/ Frosted Glass Diffuser
Susp. Hardware: 3 pcs. 5/8" x 12"
& 1 pc. 5/8" x 6" Extensions

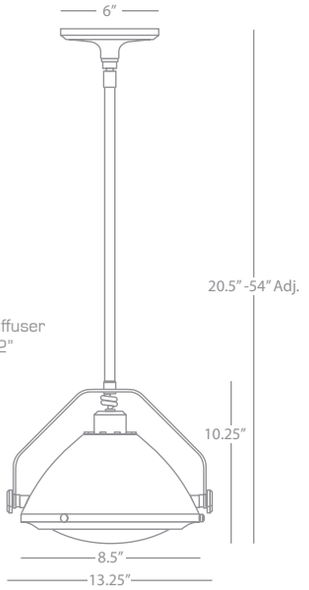

APOLLO

S1567

Pendant

1 - 150W Max.
Bulb Type: A
Direct Wire
Polished Nickel Finish w/
Charcoal Gray Painted Accents
Metal Shade w/ Frosted Glass Diffuser
Susp. Hardware: 3 pcs. 3/4" x 12"
& 1 pc. 3/4" x 6" Extensions

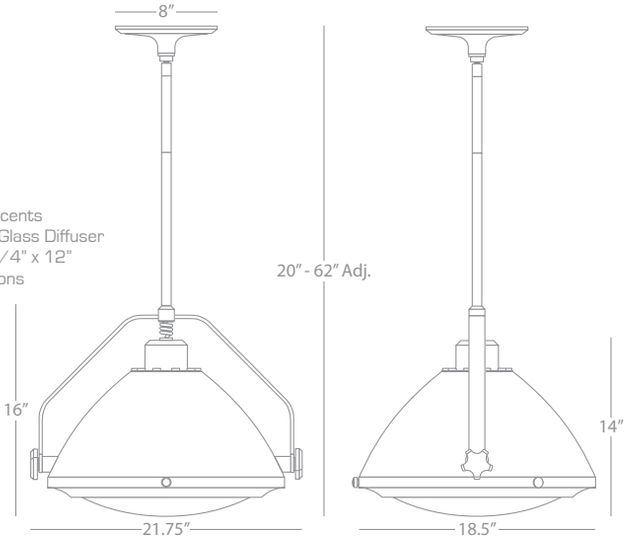

APOLLO

S1581

Wall Sconce

1 - 60W Max.
Bulb Type: A
Switch: Hi-Lo Dimming
24" Cord Cover/Direct Wire
Polished Nickel Finish w/
Charcoal Gray Painted Accents
Metal Shade w/ Frosted Glass Diffuser

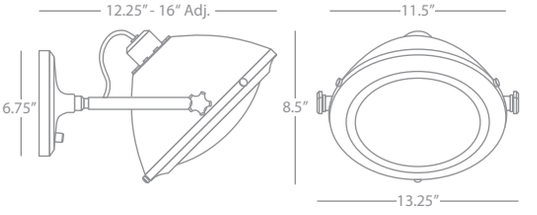

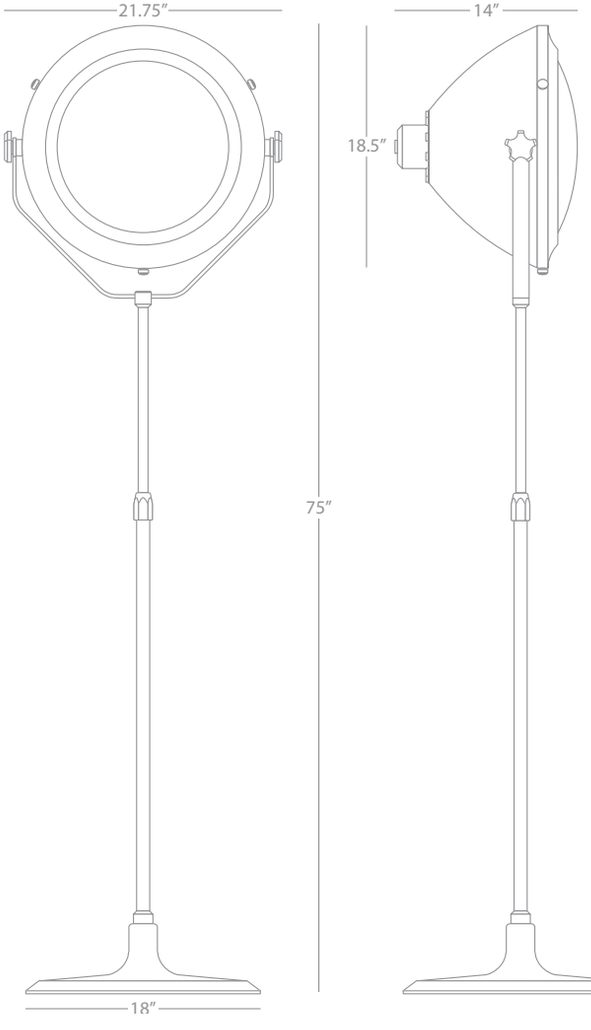

APOLLO

S1566

Floor Lamp

1 - 150W Max.
Bulb Type: A
Switch: On-Off Foot Switch
Polished Nickel Finish w/
Charcoal Gray Painted Accents
Metal Shade w/ Frosted Glass Diffuser

APOLLO

S1580

Table Lamp

1 - 60W Max.
Bulb Type: A
Switch: Hi-Lo Dimming Line Switch
Polished Nickel Finish w/
Charcoal Gray Painted Accents
Metal Shade w/ Frosted Glass Diffuser

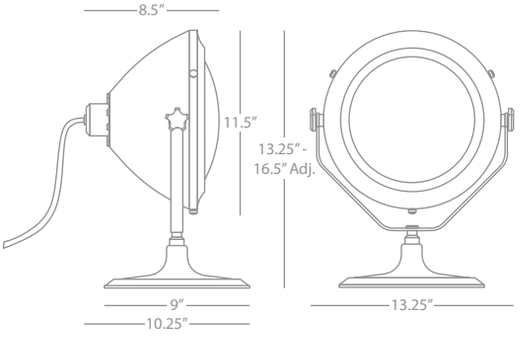



1827



1806



Z1819



1839

Real Simple

REAL SIMPLE

1827
4-Light Chandelier

4 - 60W Max.
Bulb Type: B, Candelabra
Direct Wire Only
Gunmetal Powder Coat Finish
Snowflake Fabric Shades w/ Self-Fabric Bottom Diffusers
Susp. Hardware: 3 pcs. 5/8" x 12" & 1 pc. 5/8" x 6" Extensions

FINISH/SHADE OPTIONS:

1807	Stardust White White Mont Blanc Parchment Shades
Z1817	Dark Bronze Snowflake Fabric Shades
1837	Matte Black Snowflake Fabric Shades

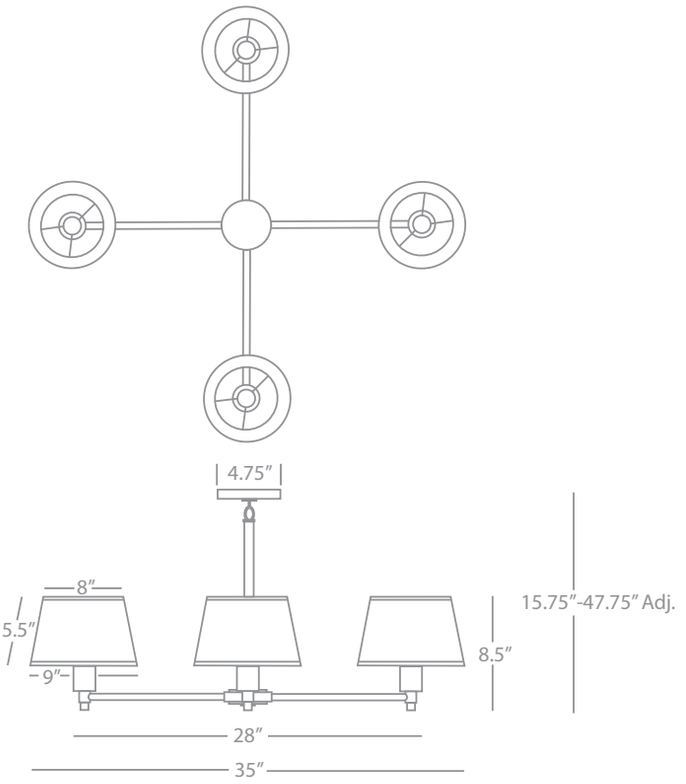

REAL SIMPLE

1806
Swing Arm Sconce

1 - 60W Max.
Bulb Type: A
Switch: Hi-Lo Dimming
24" Cord Cover/Direct Wire
Stardust White Powder Coat Finish
White Mont Blanc Parchment Shade
w/ Self-Fabric Bottom Diffuser

FINISH/SHADE OPTIONS:

Z1816	Dark Bronze Snowflake Fabric Shade
1826	Gunmetal Snowflake Fabric Shade
1836	Matte Black Snowflake Fabric Shade

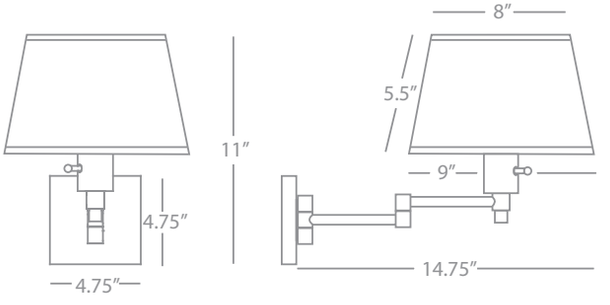

REAL SIMPLE

Z1819
Wall Mounted Boom Lamp

1 - 60W Max.
Bulb Type: A
Switch: Hi-Lo Dimming
24" Cord Cover/Direct Wire
Dark Bronze Powder Coat Finish
Snowflake Fabric Shade w/ Self-Fabric Bottom Diffuser

FINISH/SHADE OPTIONS:

1809	Stardust White White Mont Blanc Parchment Shade
1829	Gunmetal Snowflake Fabric Shade
1839	Matte Black Snowflake Fabric Shade

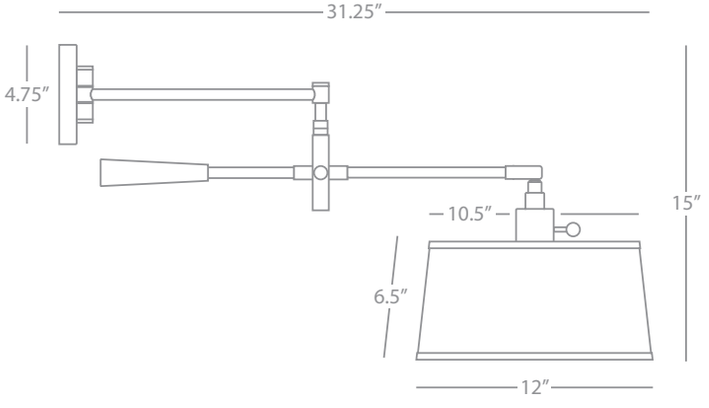



1833



1824



1802



Z1815

Real Simple

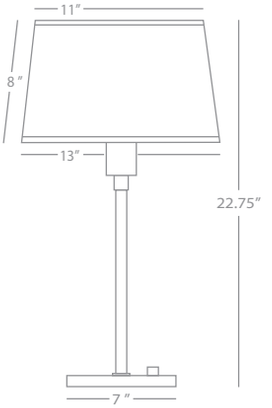

REAL SIMPLE

1802
Club Table Lamp

1 - 100W Max.
Bulb Type: A
Switch: Hi-Lo Base Switch
Stardust White Powder Coat Finish
White Mont Blanc Parchment Shade
w/ Self-Fabric Top Diffuser

FINISH/SHADE OPTIONS:

Z1812 Dark Bronze
Snowflake Fabric Shade

1822 Gunmetal
Snowflake Fabric Shade

1832 Matte Black
Snowflake Fabric Shade

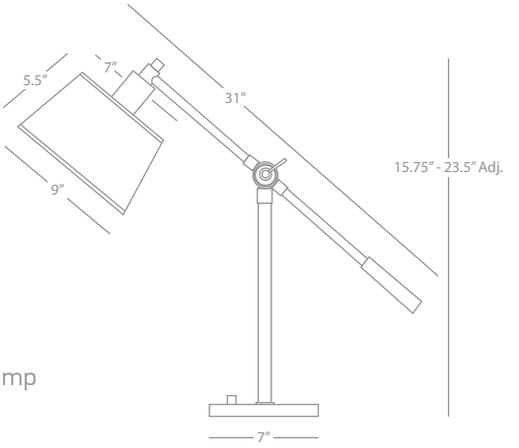

REAL SIMPLE

1833
Boom Table Lamp

1 - 100W Max.
Bulb Type: A
Switch: Hi-Lo Base Switch
Matte Black Powder Coat Finish
Snowflake Fabric Shade w/ Self-Fabric Top Diffuser

FINISH/SHADE OPTIONS:

1803 Stardust White
White Mont Blanc Parchment Shade

Z1813 Dark Bronze
Snowflake Fabric Shade

1823 Gunmetal
Snowflake Fabric Shade



REAL SIMPLE

Z1815
Swing Arm Floor Lamp

1 - 150W Max.
Bulb Type: A
Switch: 3-Way
Dark Bronze Powder Coat Finish
Snowflake Fabric Shade w/ Self-Fabric Top Diffuser

FINISH/SHADE OPTIONS:

1805 Stardust White
White Mont Blanc Parchment Shade

1825 Gunmetal
Snowflake Fabric Shade

1835 Matte Black
Snowflake Fabric Shade

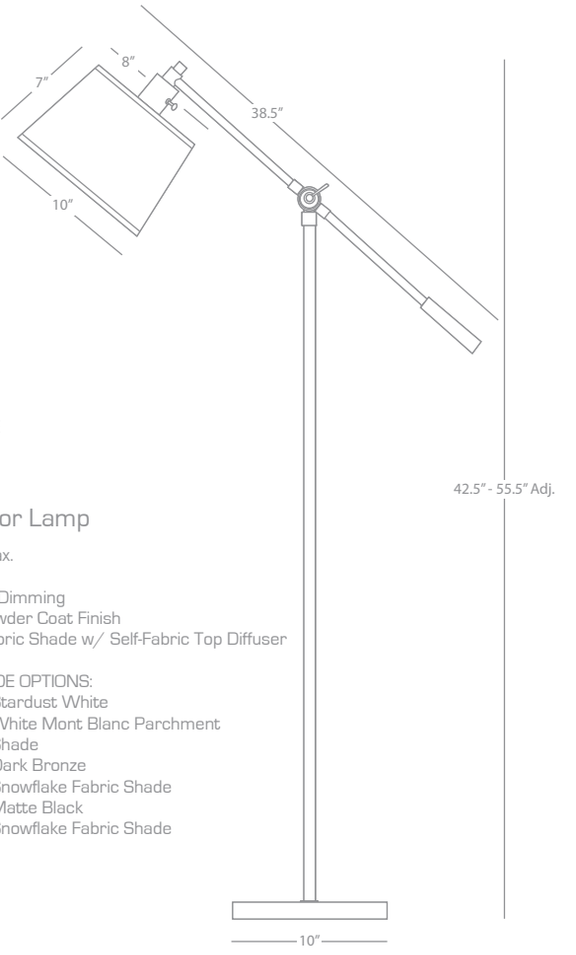

REAL SIMPLE

1824
Boom Floor Lamp

1 - 100W Max.
Bulb Type: A
Switch: Hi-Lo Dimming
Gunmetal Powder Coat Finish
Snowflake Fabric Shade w/ Self-Fabric Top Diffuser

FINISH/SHADE OPTIONS:

1804 Stardust White
White Mont Blanc Parchment
Shade

Z1814 Dark Bronze
Snowflake Fabric Shade

1834 Matte Black
Snowflake Fabric Shade



1849



1847



W1848



W1840

Bruno

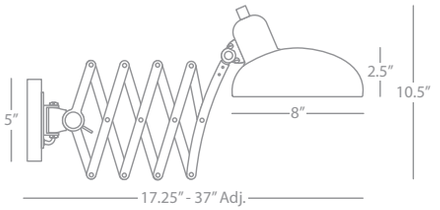

BRUNO

1849
Scissor Arm Wall Sconce

1 - 60W Max.
Bulb Type: A19, Silver Tip
Switch: On-Off
Cord Cover/Direct Wire
Lead Bronze Finish w/
Ebonized Nickel Accents
Metal Shade

Photographed with Silver Tip Bulb
SOLD SEPARATELY (Style # BUL01)
See Page 202

FINISH OPTION:
W1849 White Powder Coat w/
Polished Nickel Accents

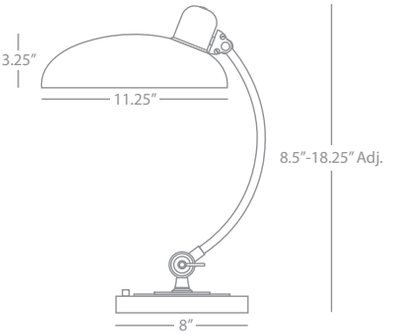

BRUNO

W1840
Adjustable “C” Arm Task Table Lamp

1 - 60W Max.
Bulb Type: G25, Silver Tip
Switch: Hi-Lo Dimming
White Powder Coat Finish w/
Polished Nickel Accents
Metal Shade

FINISH OPTION:
1840 Lead Bronze w/
Ebonized Nickel Accents

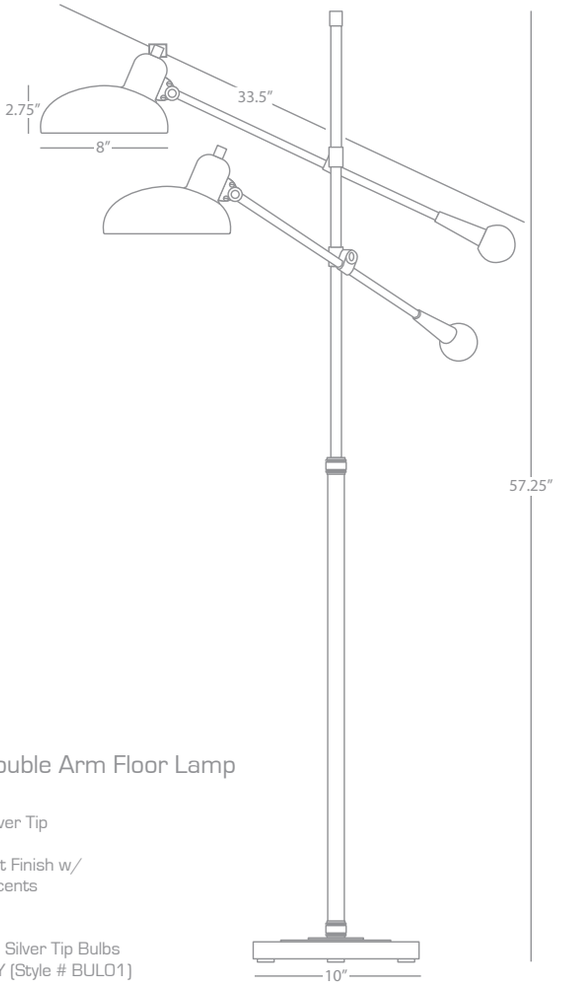

BRUNO

W1848
Adjustable Double Arm Floor Lamp

2 - 60W Max.
Bulb Type: A19, Silver Tip
Switch: On-Off
White Powder Coat Finish w/
Polished Nickel Accents
Metal Shades

Photographed with Silver Tip Bulbs
SOLD SEPARATELY (Style # BUL01)
See Page 202

FINISH OPTION:
1848 Lead Bronze w/
Ebonized Nickel Accents

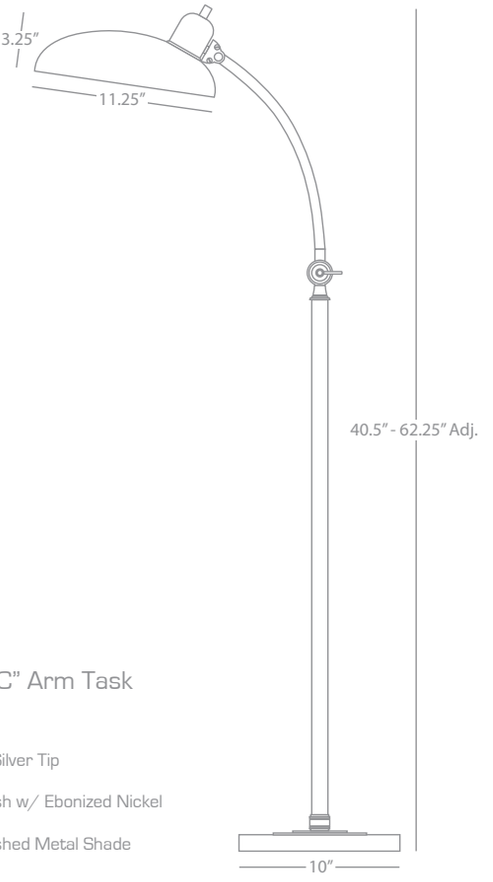

BRUNO

1847
Adjustable “C” Arm Task Floor Lamp

1 - 60W Max.
Bulb Type: G25, Silver Tip
Switch: On-Off
Lead Bronze Finish w/ Ebonized Nickel Accents
Lead Bronze Finished Metal Shade

FINISH OPTION:
W1847 White Powder Coat w/
Polished Nickel Accents



1842X



1842W



1841



1841X

Bruno

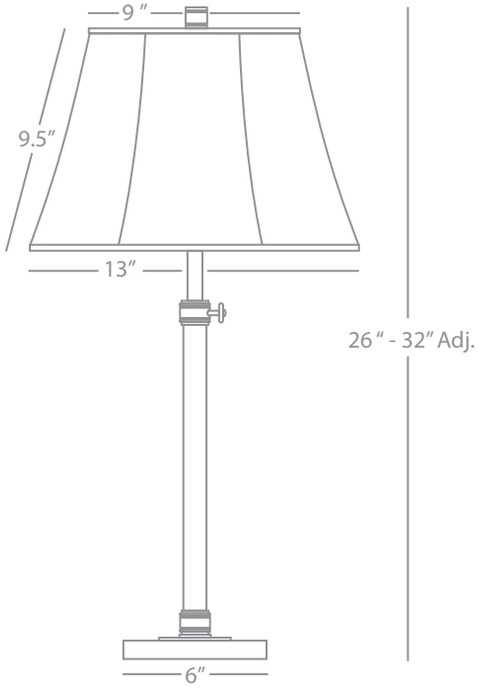

BRUNO

1841

Adjustable Column Table Lamp

1 - 150W Max.
Bulb Type: A
Switch: 3-Way
Lead Bronze Finish w/ Ebonized
Nickel Accents
Gray Microfiber Fabric Empire Shade

SHADE OPTIONS:
1841W Ivory Microfiber
1841X Fondine

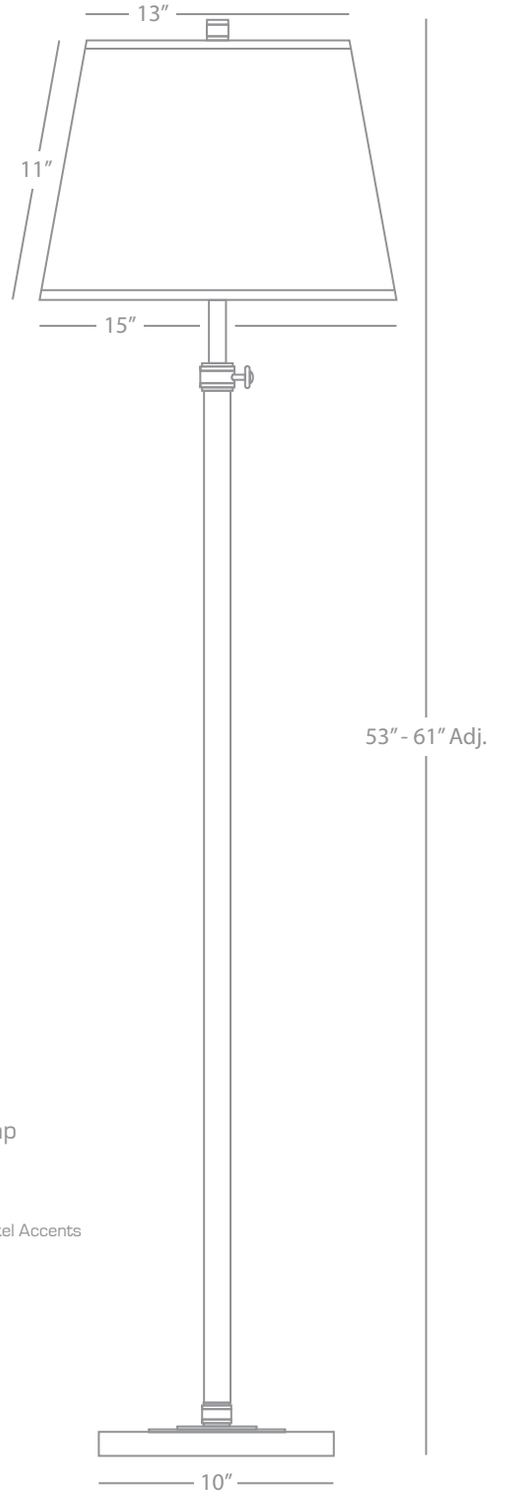

BRUNO

1842X

Adjustable Club Floor Lamp

1 - 150W Max.
Bulb Type: A
Switch: 3-Way
Lead Bronze Finish w/ Ebonized Nickel Accents
Fondine Fabric Shade

SHADE OPTIONS:
1842 Gray Microfiber
1842W Ivory Microfiber



1894



1874



P1862

1863

Ant Bee

ANT BEE

1874
Swing Arm Sconce

1 - 60W Max.
Bulb Type: A
Switch: Hi-Lo Dimming
24" Cord Cover/Direct Wire
Antique Brass Finish
Metal Shade

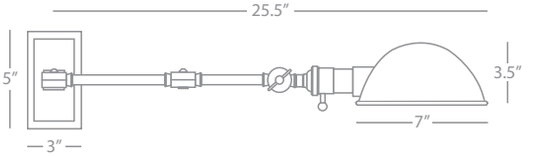

FINISH OPTIONS:
1864 Deep Patina Bronze
A1874 Aged Brass
P1874 Patina Nickel

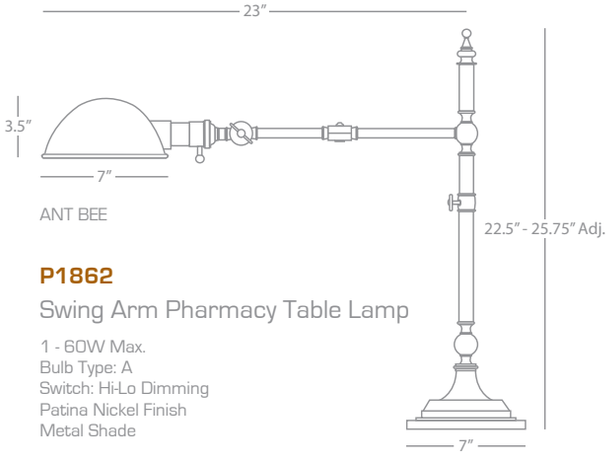

ANT BEE

P1862
Swing Arm Pharmacy Table Lamp

1 - 60W Max.
Bulb Type: A
Switch: Hi-Lo Dimming
Patina Nickel Finish
Metal Shade

FINISH OPTIONS:
1862 Deep Patina Bronze
A1862 Aged Brass

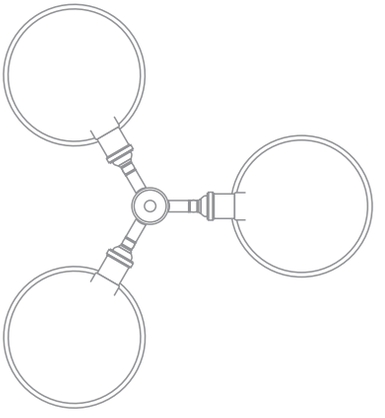

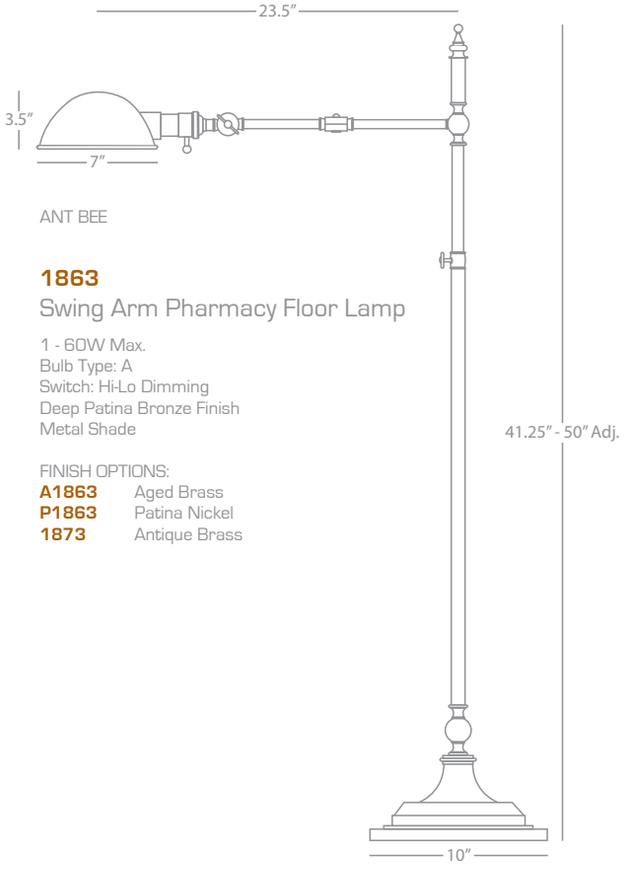

ANT BEE

1863
Swing Arm Pharmacy Floor Lamp

1 - 60W Max.
Bulb Type: A
Switch: Hi-Lo Dimming
Deep Patina Bronze Finish
Metal Shade

FINISH OPTIONS:
A1863 Aged Brass
P1863 Patina Nickel
1873 Antique Brass

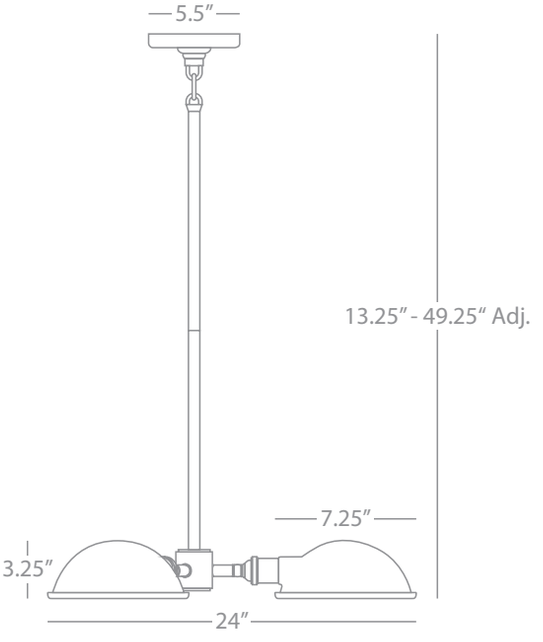

ANT BEE

1894
Pendant

3 - 60W Max.
Bulb Type: A
Direct Wire
Aged Brass Finish
Matching Metal Shades
Susp. Hardware: 1 pc. 1/2" x 6" & 3 pcs. 1/2" x 12" Extension Rods

FINISH OPTIONS:
P1894 Patina Nickel
Z1894 Deep Patina Bronze



S1900



Z1900



1905

Alvin

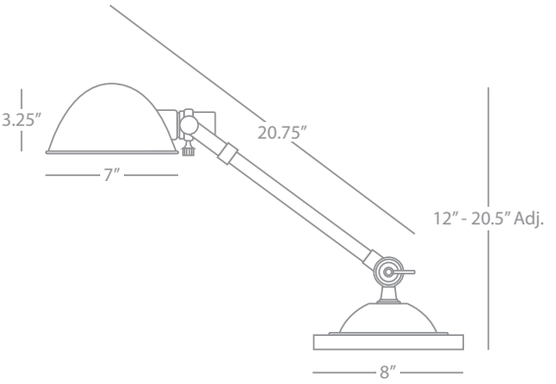

ALVIN

S1900

Pharmacy Task Lamp

1 - 60W Max.
Bulb Type: A
Switch: Hi-Lo Dimming
Polished Nickel Finish
Metal Shade

FINISH OPTIONS:
1900 Antique Brass
Z1900 Deep Patina Bronze

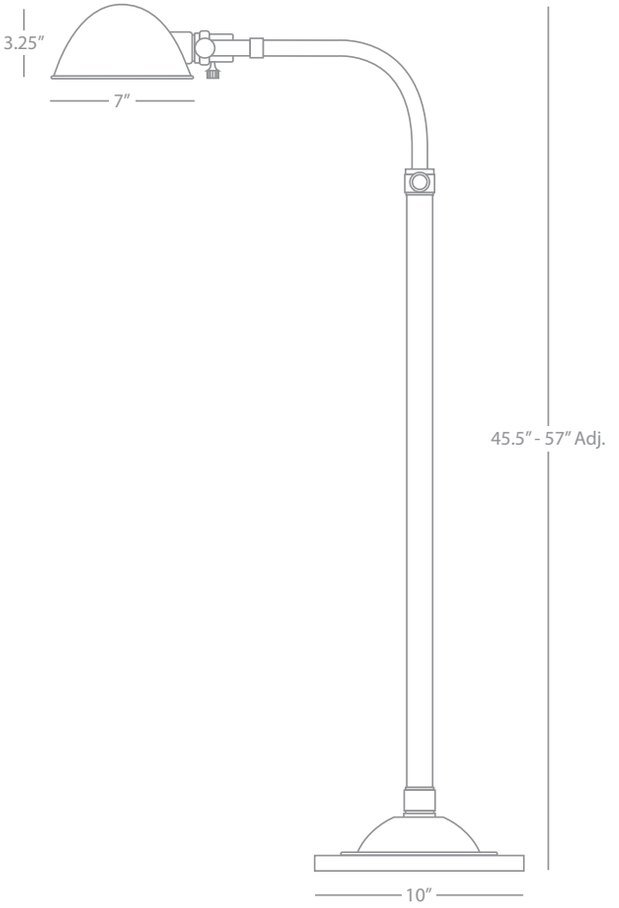

ALVIN

1905

Pharmacy Floor Lamp

1 - 60W Max.
Bulb Type: A
Switch: Full Range Dimmer
Antique Brass Finish
Metal Shade

FINISH OPTIONS:
S1905 Polished Nickel
Z1905 Deep Patina Bronze



Z1901



Z1908



Z1906

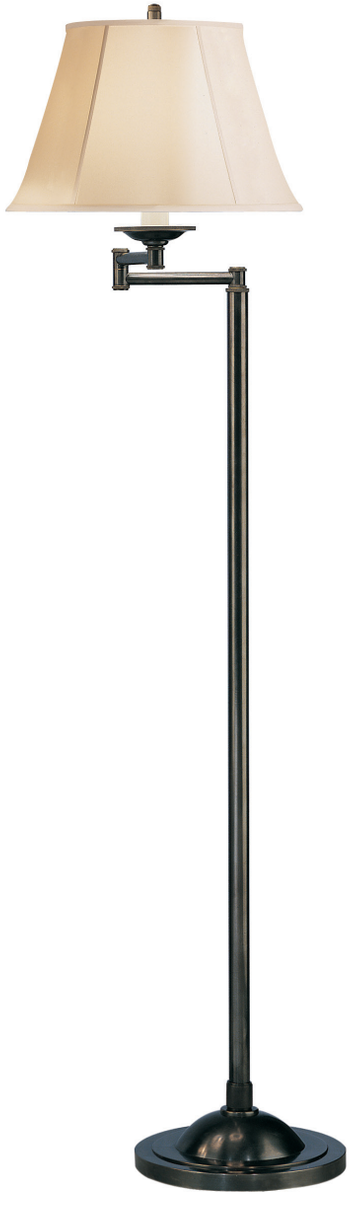

Z1903

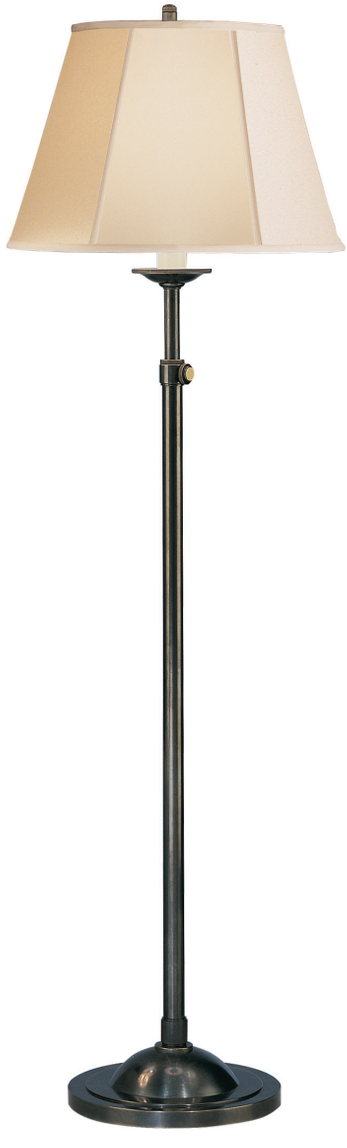

Z1902

Alvin

ALVIN

Z1908

Swing Arm Sconce

1 - 100W Max.
Bulb Type: A
Switch: Hi-Lo Dimming
24" Cord Cover/Direct Wire
Deep Patina Bronze Finish
Barley Fabric Empire Shade w/ Narrow Piping

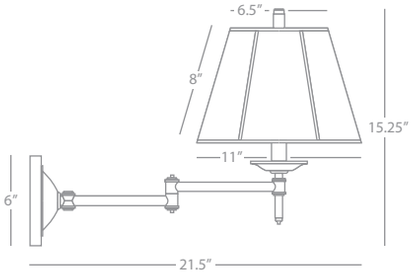

ALVIN

Z1901

Adjustable Column Table Lamp

1 - 150W Max.
Bulb Type: A
Switch: 3-Way
Deep Patina Bronze Finish
Barley Fabric Empire Shade w/ Narrow Piping



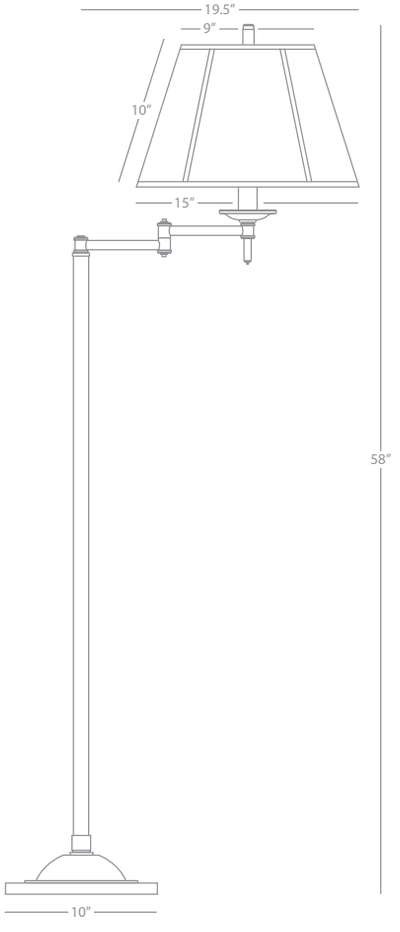

ALVIN

Z1903

Swing-Arm Floor Lamp

1 - 150W Max.
Bulb Type: A
Switch: 3-Way
Deep Patina Bronze Finish
Barley Fabric Empire Shade w/ Narrow Piping

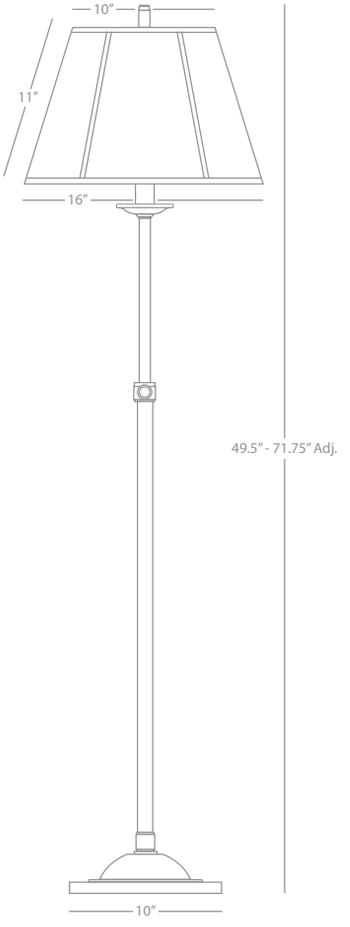

ALVIN

Z1902

Adjustable Club Floor Lamp

1 - 150W Max.
Bulb Type: A
Switch: 3-Way
Deep Patina Bronze Finish
Barley Fabric Empire Shade w/ Narrow Piping

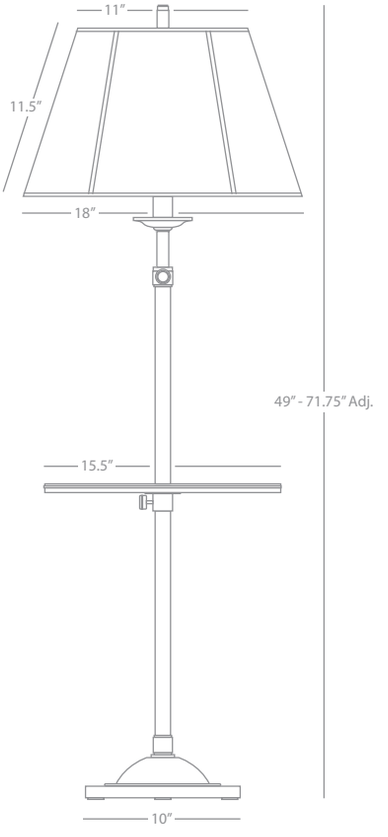

ALVIN

Z1906

Adjustable Tray Table Floor Lamp

1 - 150W Max.
Bulb Type: A
Switch: 3-Way
Adjustable Tray Height
Deep Patina Bronze Finish
Barley Fabric Empire Shade w/ Narrow Piping



S1911



1912



S1910



S1909

Porter

PORTER

1912
Pendant

3 - 60W Max.
Bulb Type: A
Direct Wire Only
Antique Brass Finish
Metal Shade w/ Painted White Interior
19.25" Acrylic Diffuser Included
Susp. Hardware: 3 Ft. Chain

FINISH OPTION:
S1912 Polished Nickel

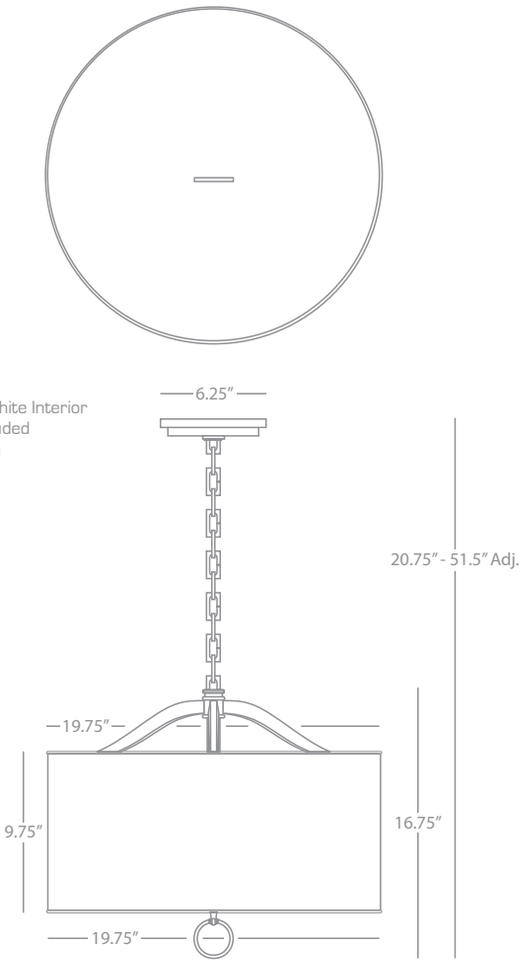

PORTER

S1909
Wall Sconce

2 - 60W Max.
Bulb Type: G16.5 Candelabra
Direct Wire Only
Polished Nickel Finish
Metal Shade

FINISH OPTION:
1909 Antique Brass

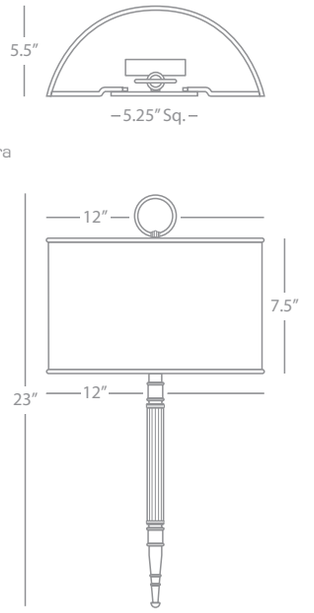

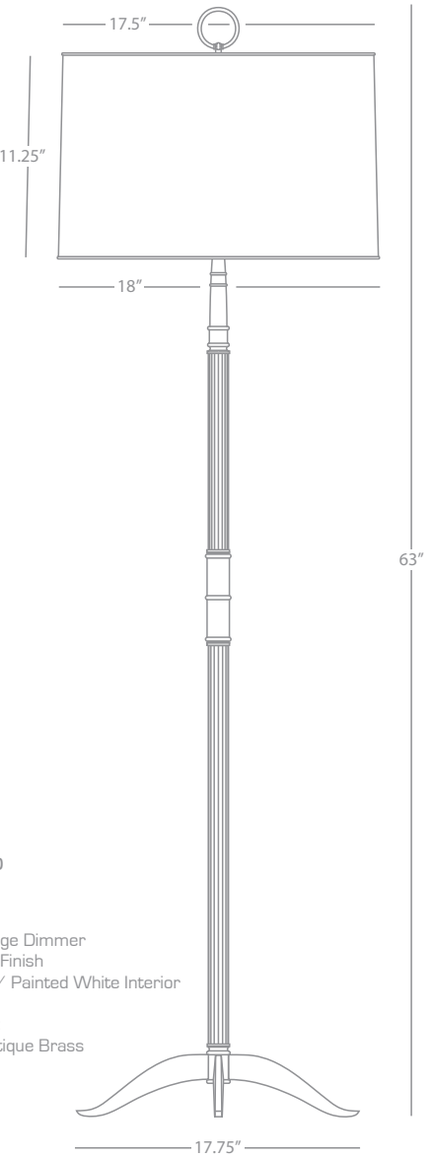

PORTER

S1910
Column Table Lamp

1 - 150W Max.
Bulb Type: A
Switch: Full Range Dimmer
Polished Nickel Finish
Metal Shade w/ Painted White Interior

FINISH OPTION:
1910 Antique Brass

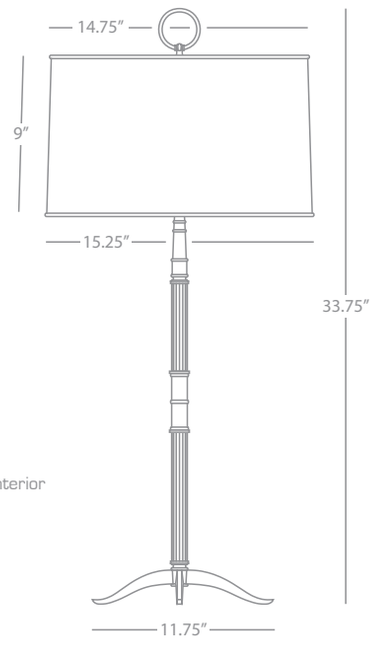

PORTER

S1911
Floor Lamp

1 - 150W Max.
Bulb Type: A
Switch: Full Range Dimmer
Polished Nickel Finish
Metal Shade w/ Painted White Interior

FINISH OPTION:
1911 Antique Brass



1957



1958



1957B



1958B

Sloan

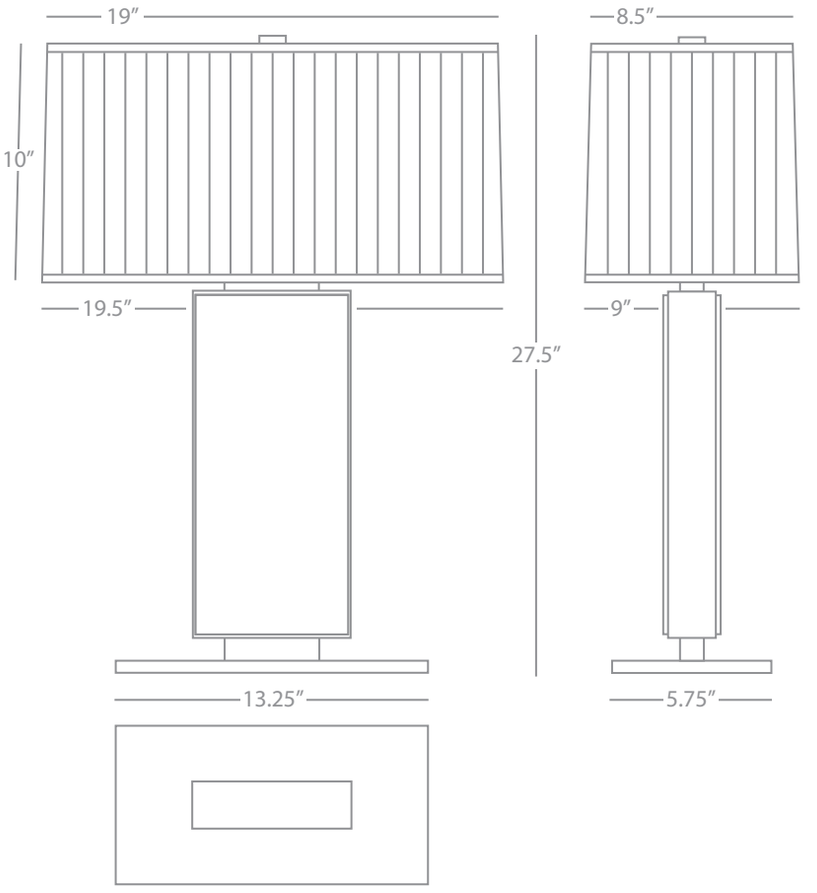

SLOAN

1957

Table Lamp

2 - 100W Max.
Bulb Type: A
Switch: On-Off Pull Chains
Lead Crystal w/ Aged Brass Accents
Rectangular Ivory Silk Box Pleat Shade
w/Off-White Silk Lining

SHADE OPTION:

1957B Black Painted Opaque Parchment
Matte Gold Lining

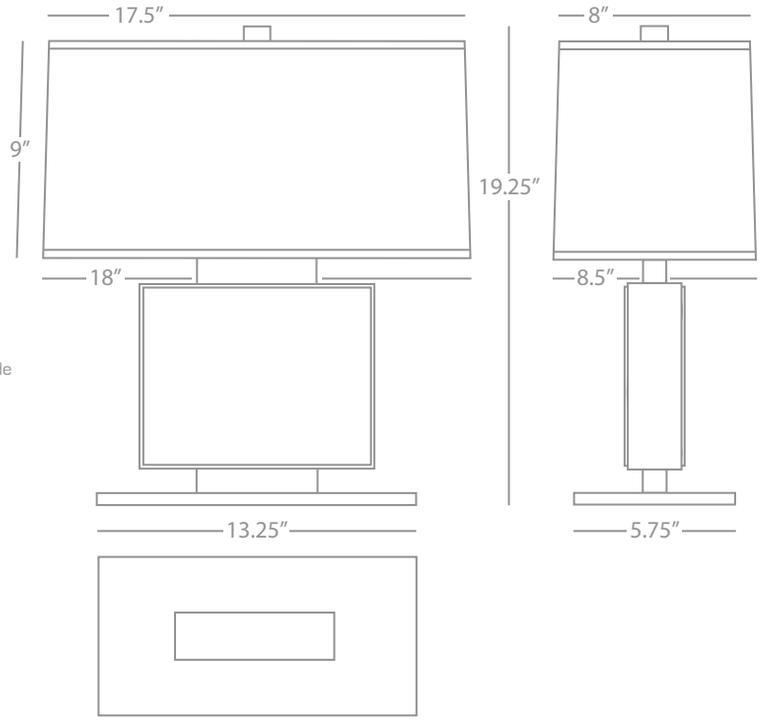

SLOAN

1958B

Wide Table Lamp

2 - 100W Max.
Bulb Type: A
Switch: On-Off Pull Chains
Lead Crystal w/ Aged Brass Accents
Rectangular Black Painted Opaque Parchment Shade
w/Matte Gold Lining

SHADE OPTION:

1958 Ivory Silk Box Pleat Shade
Off-White Silk Lining



1972



D1974



D1971



1973



1970

Juliet

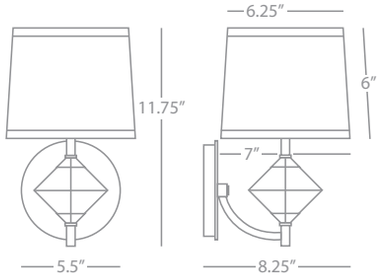

JULIET

1973
Wall Sconce

1 - 60W Max.
Bulb Type: B, Candelabra
Switch: On-Off Line Switch
24" Cord Cover/Direct Wire
Aged Brass Finish
Rock Crystal Accent
Pearl Dupoini Fabric Shade

FINISH OPTION:
D1973 Dark Antique Nickel

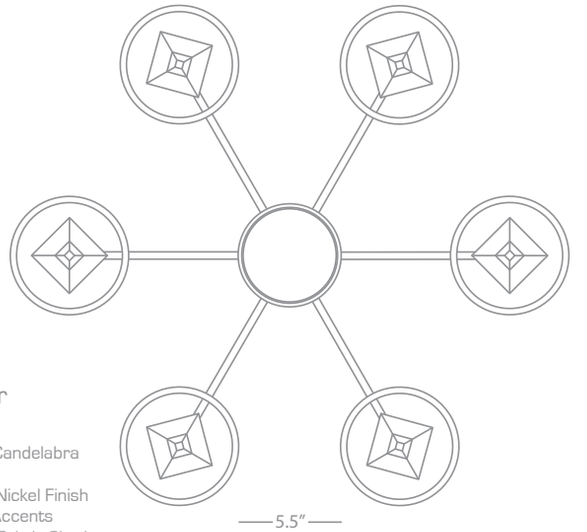

JULIET

D1974
Chandelier

6 - 60W Max.
Bulb Type: B, Candelabra
Direct Wire
Dark Antique Nickel Finish
Rock Crystal Accents
Pearl Dupoini Fabric Shades
Susp. Hardware: 1 pc. 5/8" x 6" & 3 pcs. 5/8" x 12" Extensions

FINISH OPTION:
1974 Aged Brass

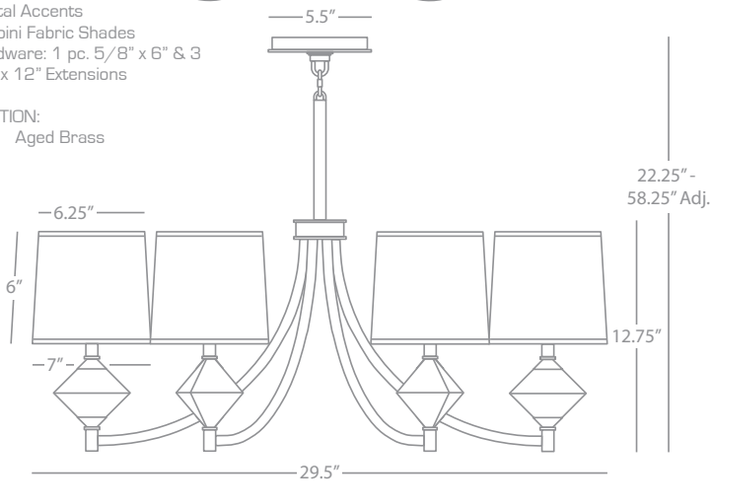

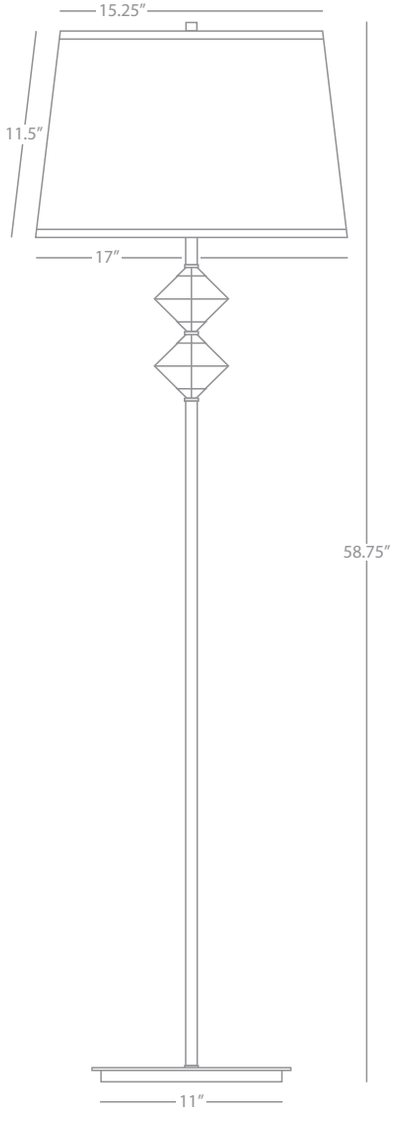

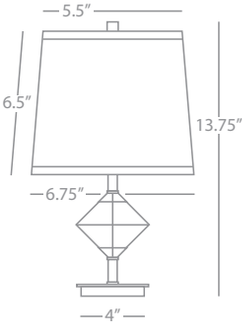

JULIET

1970
Accent Lamp

1 - 60W Max.
Bulb Type: B, Candelabra
Switch: Hi-Lo Line Switch
Aged Brass Finish
Rock Crystal Accent
Pearl Dupoini Fabric Shade

FINISH OPTION:
D1970 Dark Antique Nickel

JULIET

1972
Floor Lamp

1 - 150W Max.
Bulb Type: A
Switch: Hi-Lo Dimming
Aged Brass Finish
Rock Crystal Accents
Pearl Dupoini Fabric Shade

FINISH OPTION:
D1972 Dark Antique Nickel

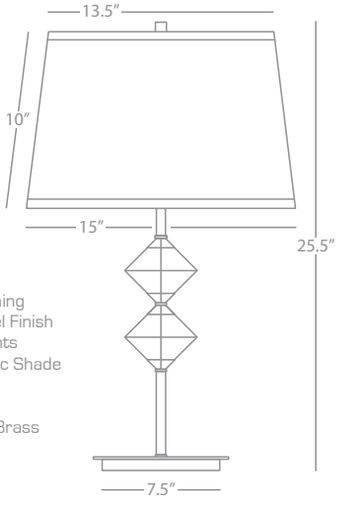

JULIET

D1971
Table Lamp

1 - 150W Max.
Bulb Type: A
Switch: Hi-Lo Dimming
Dark Antique Nickel Finish
Rock Crystal Accents
Pearl Dupoini Fabric Shade

FINISH OPTION:
1971 Aged Brass



1985



D1986



S1987

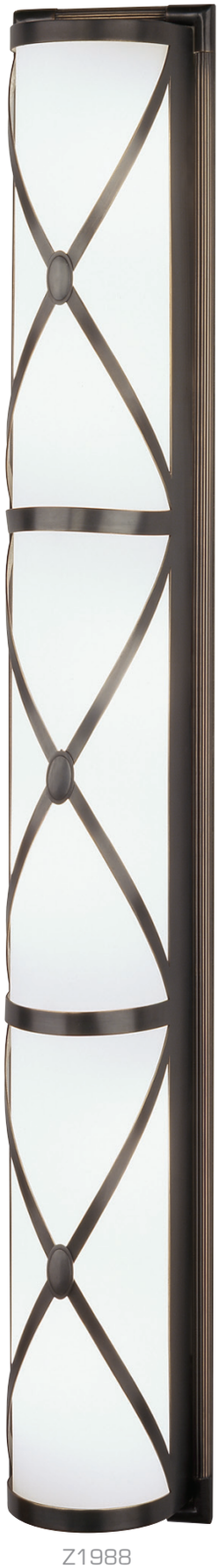

Z1988

Chase

CHASE

1985
Flush Mount

3 - 60W Max.
Bulb Type: A
Direct Wire Only
Antique Brass Finish
Frosted White Glass Shade

FINISH OPTIONS:
D1985 Dark Antique Nickel
S1985 Polished Nickel
Z1985 Deep Patina Bronze

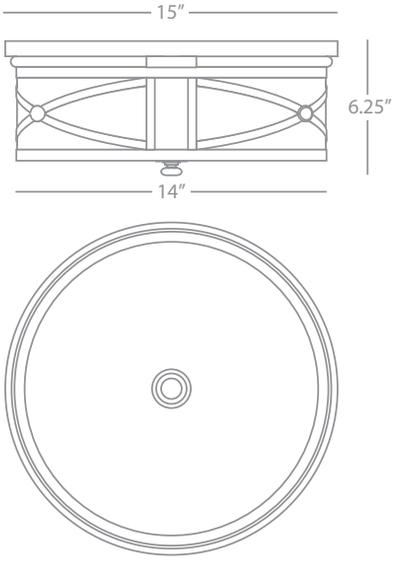

CHASE

D1986
Half Round Sconce

2 - 40W Max.
Bulb Type: A
Direct Wire Only
Dark Antique Nickel Finish
Frosted White Cased Glass Shade
Can Be Mounted Horizontally or Vertically

FINISH OPTIONS:
1986 Antique Brass
S1986 Polished Nickel
Z1986 Deep Patina Bronze

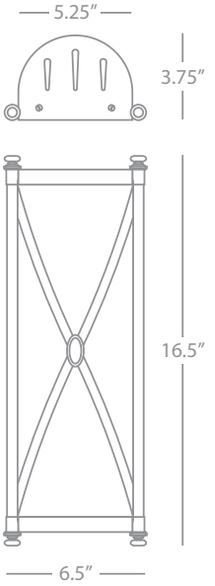

CHASE

S1987
Double Shade Bath Strip

4 - 60W Max.
Bulb Type: B11 Torpedo
Direct Wire Only
Polished Nickel Finish
Frosted White Cased Glass Shades
Can Be Mounted Horizontally or Vertically

FINISH OPTIONS:
1987 Antique Brass
D1987 Dark Antique Nickel
Z1987 Deep Patina Bronze

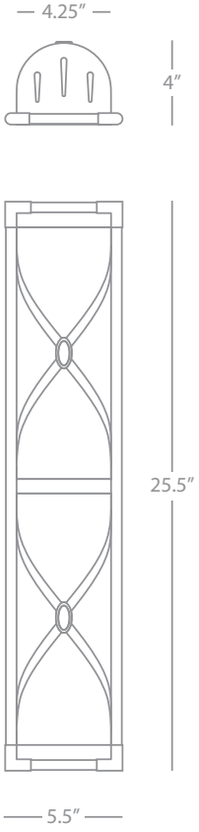

CHASE

Z1988
Triple Shade Bath Strip

6 - 60W Max.
Bulb Type: B11 Torpedo
Direct Wire Only
Deep Patina Bronze Finish
Frosted White Cased Glass Shades
Can Be Mounted Horizontally or Vertically

FINISH OPTIONS:
1988 Antique Brass
D1988 Dark Antique Nickel
S1988 Polished Nickel

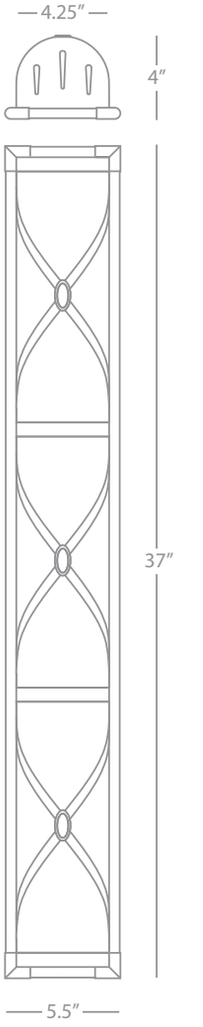



D2131



2130



D2133



2132

Axis

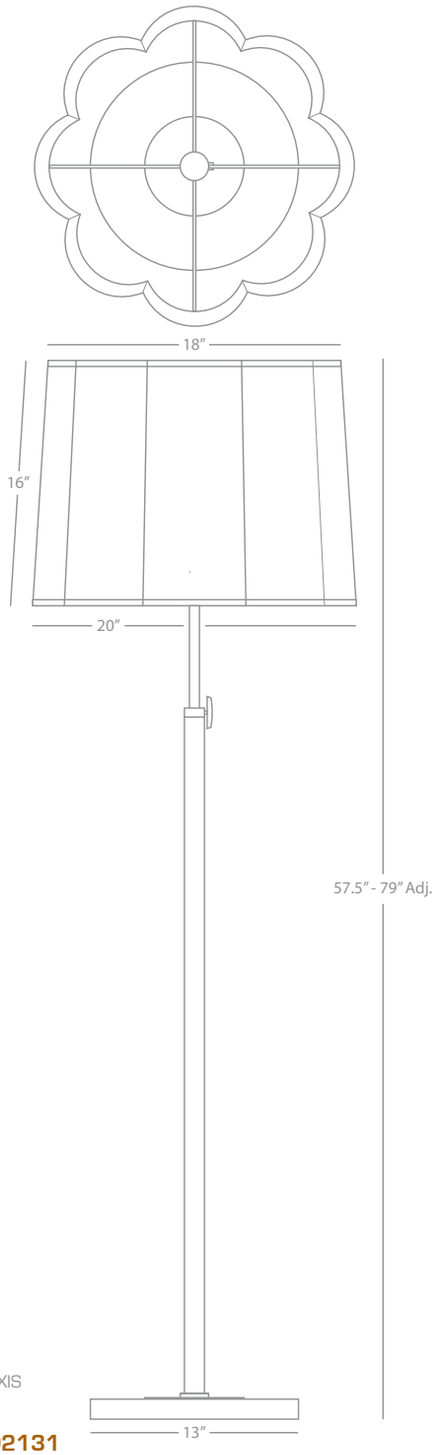

AXIS

D2131

Adjustable Floor Lamp

1 - 150W Max.
Bulb Type: A
Switch: 3-Way
Blackened Antique Nickel Finish w/
Matte Black Accents
Honed White Marble Base
Scalloped Ascot White Fabric Shade w/
Contrasting Trim

FINISH/SHADE OPTION:

2131 Aged Natural Brass Finish w/
Cocoa Brown Accents
Honed Travertine Base
Fondine Fabric Shade w/
Contrasting Trim

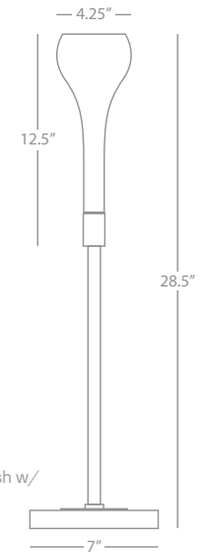

AXIS

D2133

Table Torchiere

1 - 60W Max.
Bulb Type: G16.5 Candelabra
Switch: On-Off Line Switch
Blackened Antique Nickel Finish w/
Matte Black Accents
Honed White Marble Base

FINISH/SHADE OPTION:

2133 Aged Natural Brass w/
Matte Black Accents
Honed Travertine Base

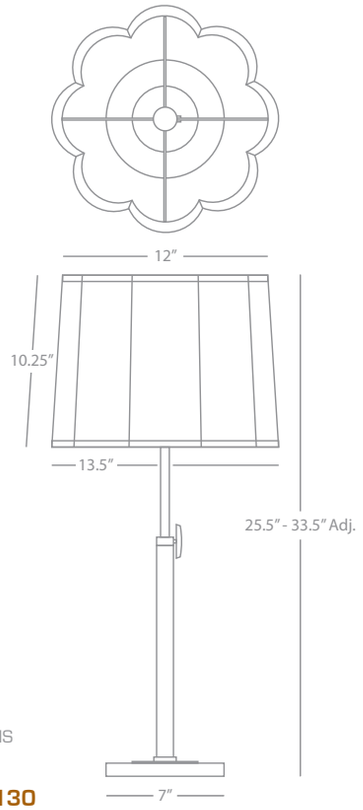

AXIS

2130

Adjustable Table Lamp

1 - 150W Max.
Bulb Type: A
Switch: 3-Way
Aged Natural Brass Finish w/
Cocoa Brown Accents
Honed Travertine Base
Scalloped Fondine Fabric Shade w/
Contrasting Trim

FINISH/SHADE OPTION:

D2130 Blackened Antique Nickel w/
Matte Black Accents
Honed White Marble Base
Ascot White Fabric Shade w/
Contrasting Trim

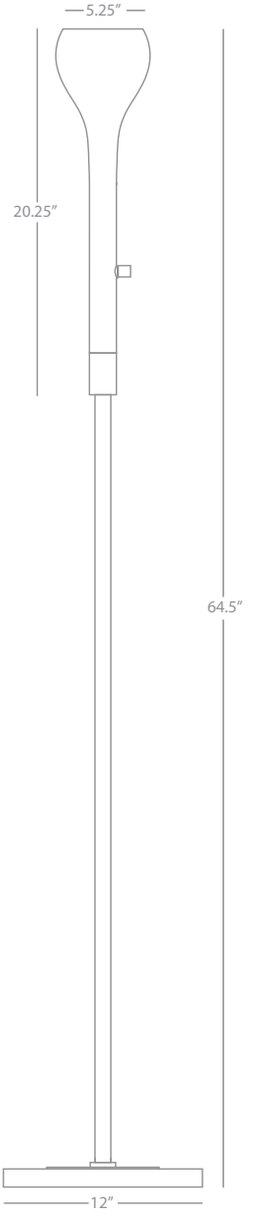

AXIS

2132

Floor Torchiere

1 - 150W Max.
Bulb Type: A
Switch: 3-Way
Aged Natural Brass Finish w/
Cocoa Brown Accents
Honed Travertine Base

FINISH/SHADE OPTION:

D2132 Blackened Antique Nickel w/
Matte Black Accents
Honed White Marble Base



D2128



2129

Axis

AXIS

D2128

Oval Chandelier

6 - 60W Max.
Bulb Type: B, Candelabra
Direct Wire
Blackened Antique Nickel Finish w/
Matte Black Accents
Oval Ascot White Fabric Shades w/
Contrasting Trim
Susp. Hardware: 1 pc. 5/8" x 6" & 2 pcs. 5/8" x 12" Aged Brass & 1 pc. 1" x 6" & 1 pc. 1" x 12" Cocoa Brown Extensions

FINISH/SHADE OPTION:

2128 Aged Brass w/
Cocoa Brown Accents
Fondine Shades w/
Contrasting Trim

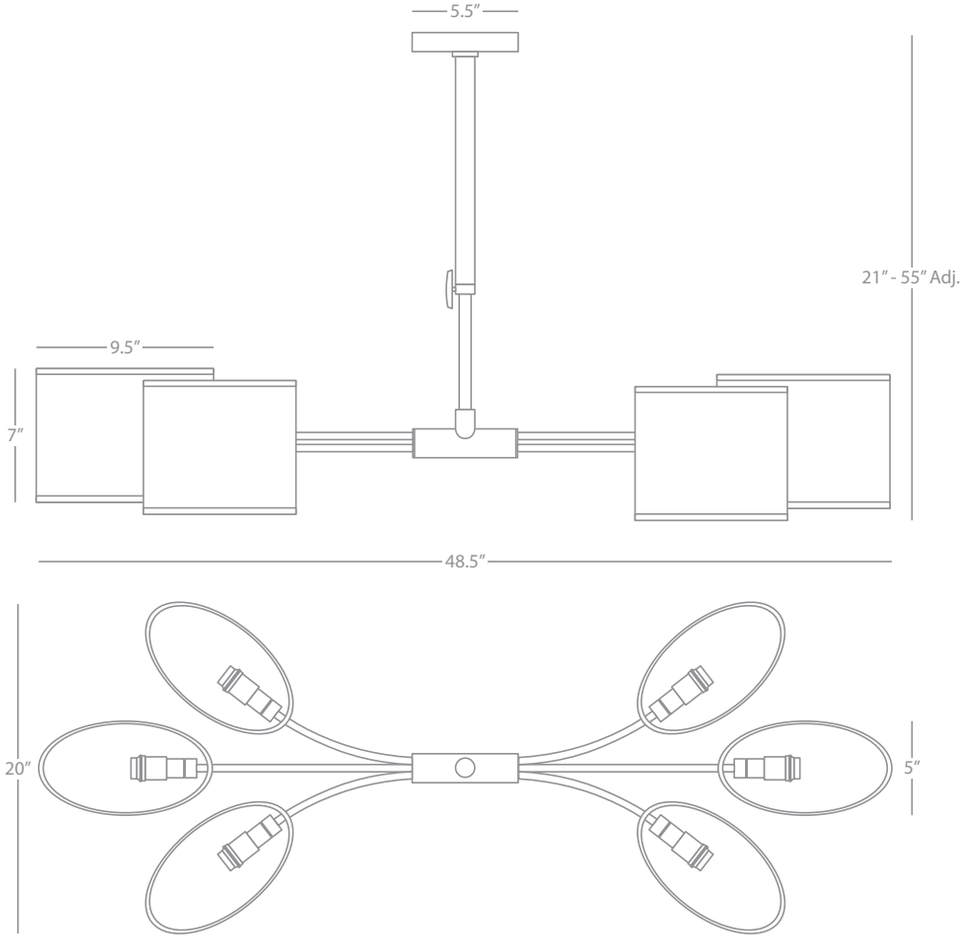

AXIS

2129

Double Shaded Pendant

4 - 100W Max.
Bulb Type: A
Direct Wire
Aged Brass Finish w/
Cocoa Brown Accents
Scalloped Fondine Fabric Shades w/
Contrasting Trim
15" Dia. White Acrylic Diffusers
Susp. Hardware: 1 pc. 5/8" x 6" & 2 pcs. 5/8" x 12" Aged Brass & 1 pc. 1" x 6" & 1 pc. 1" x 12" Cocoa Brown Extensions

FINISH/SHADE OPTION:

D2129 Blackened Antique Nickel w/
Matte Black Accents
Ascot White Shade w/ Contrasting Trim

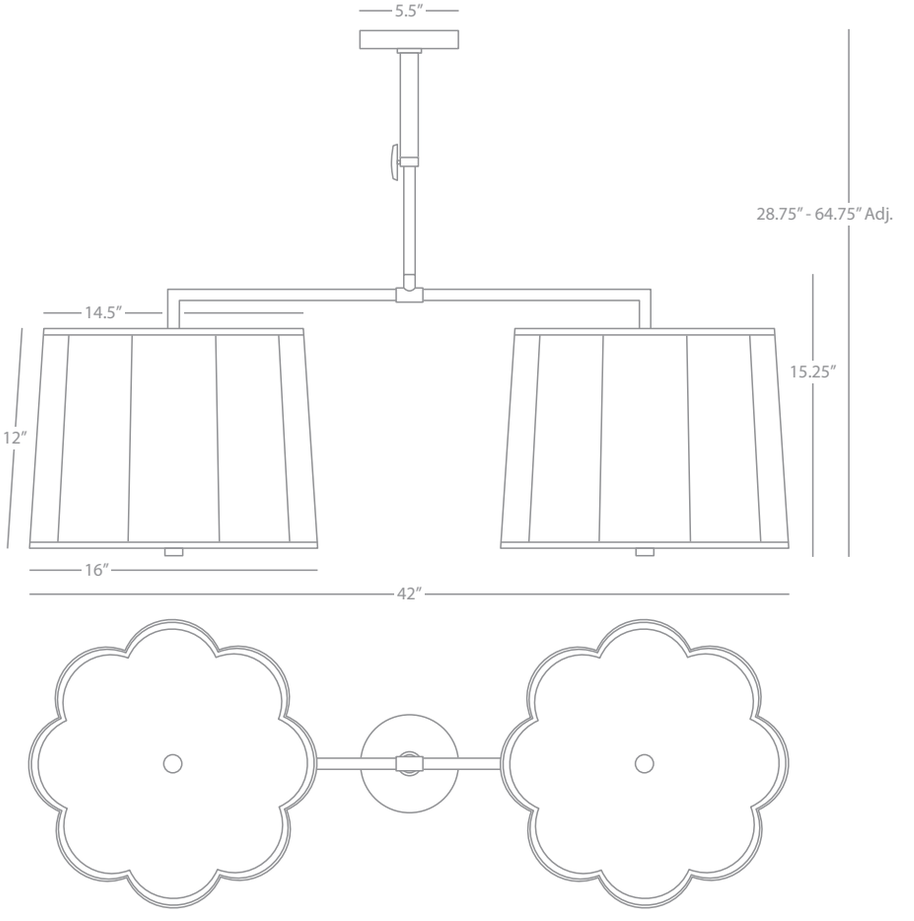



D2139



D2134



2138



2135



2136



D2137

Axis

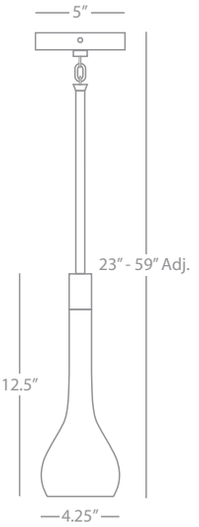

AXIS

D2134
Mini Pendant

1 - 60W Max.
Bulb Type: G16.5 Candelabra
Direct Wire Only
Blackened Antique Nickel Finish w/
Matte Black Accents
Susp. Hardware: 3 pcs. 1/2" x 12" &
1 pc. 1/2" x 6" Extensions

FINISH/SHADE OPTION:
2134 Aged Natural Brass w/
Cocoa Brown Accents

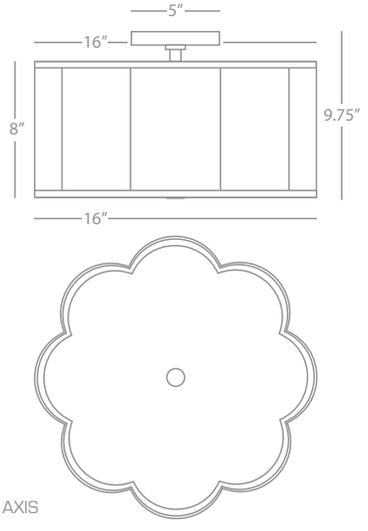

AXIS

D2139
Semi-Flush Mount

2 - 100W Max.
Bulb Type: A
Direct Wire
Blackened Antique Nickel Finish
Scalloped Ascot White Fabric Shade w/
Contrasting Trim
15" Dia. White Acrylic Diffuser

FINISH/SHADE OPTION:
2139 Aged Brass
Fondine Shade w/
Contrasting Trim

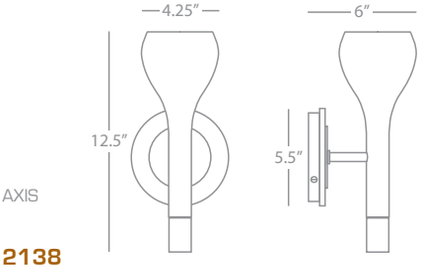

AXIS

2138
Wall Torchiere

1 - 60W Max.
Bulb Type: G16.5 Candelabra
Switch: On-Off
24" Cord Cover/Direct Wire
Aged Natural Brass Finish
Honed Travertine Back Plate

FINISH/SHADE OPTION:
D2138 Blackened Antique Nickel
Honed White Marble Back Plate

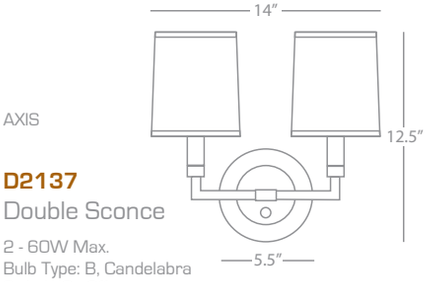

AXIS

D2137
Double Sconce

2 - 60W Max.
Bulb Type: B, Candelabra
Switch: On-Off
24" Cord Cover/Direct Wire
Blackened Antique Nickel Finish w/
Matte Black Accents
Honed White Marble Back Plate
Ascot White Fabric Shade w/
Contrasting Trim

FINISH/SHADE OPTION:
2137 Aged Natural Brass w/
Cocoa Brown Accents
Honed Travertine Back Plate
Fondine Fabric Shade w/
Contrasting Trim

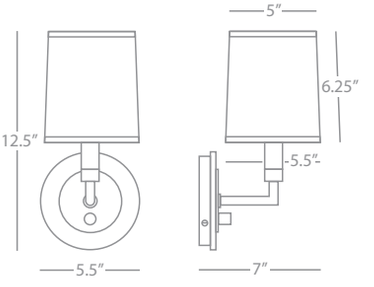

AXIS

2136
Single Sconce

1 - 60W Max.
Bulb Type: B, Candelabra
Switch: On-Off
24" Cord Cover/Direct Wire
Aged Natural Brass Finish w/
Cocoa Brown Accents
Honed Travertine Back Plate
Fondine Fabric Shade w/
Contrasting Trim

FINISH/SHADE OPTION:
D2136 Blackened Antique Nickel w/
Matte Black Accents
Honed White Marble Back Plate
Ascot White Fabric Shade w/
Contrasting Trim

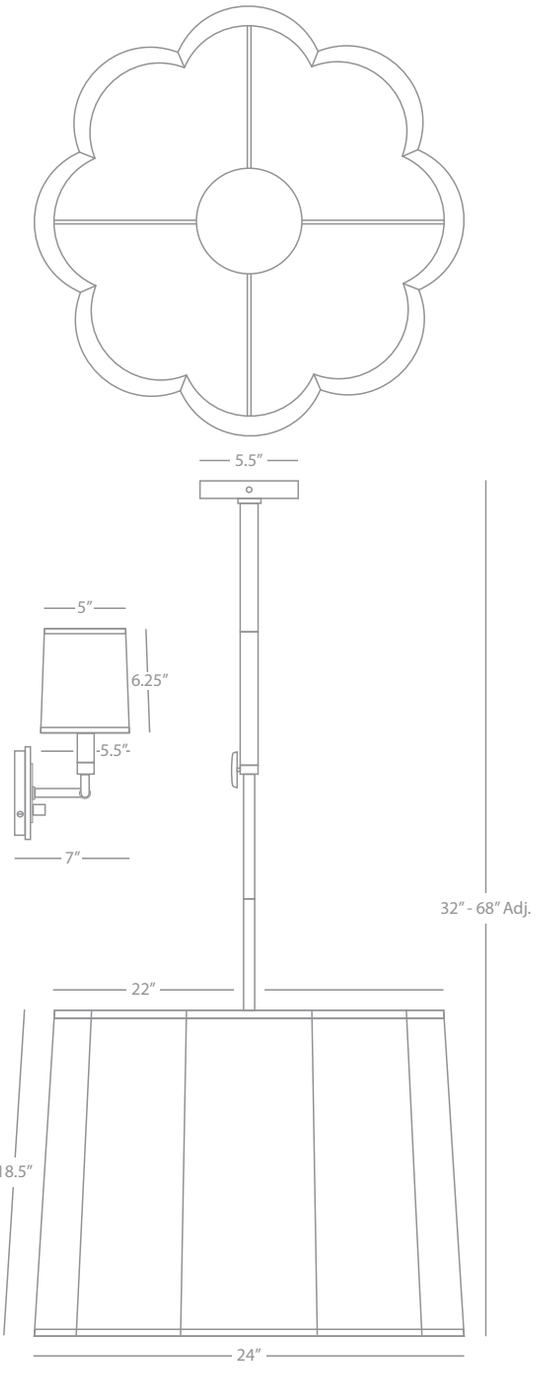

AXIS

2135
Shaded Pendant

3 - 100W Max.
Bulb Type: A
Direct Wire Only
Aged Natural Brass Finish w/ Cocoa Brown Accents
Scalloped Fondine Fabric Shade w/ Contrasting Trim
22.5" Dia. White Acrylic Diffuser
Susp. Hardware: 1 pc. 5/8" x 6" & 2 pcs. 5/8" x 12"
Aged Brass & 1 pc. 1" x 6" & 1 pc. 1" x 12" Cocoa Brown
Extensions

FINISH/SHADE OPTION:
D2135 Blackened Antique Nickel w/
Matte Black Accents
Ascot White Shade w/
Contrasting Trim

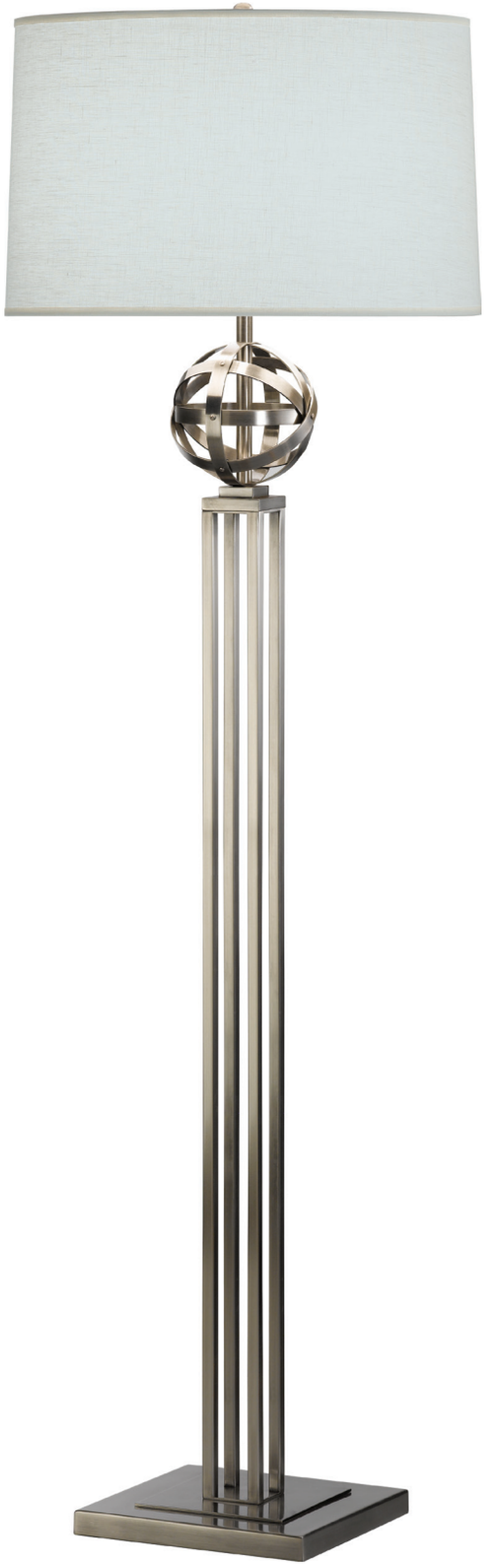

D2162



Z2160



D2161

Lucy

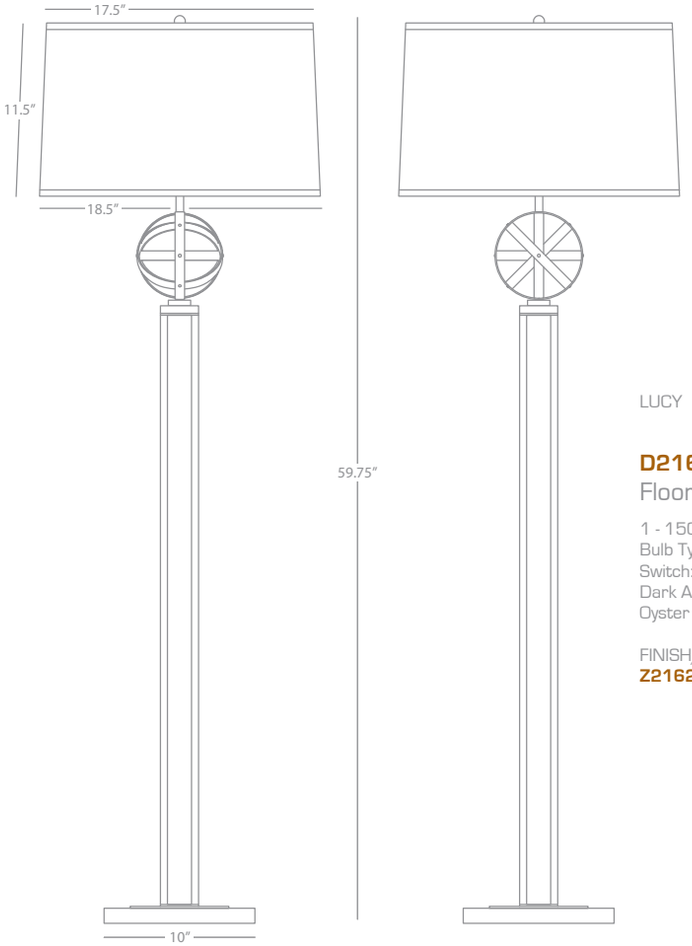

LUCY

D2162
Floor Lamp

1 - 150W Max.
Bulb Type: A
Switch: 3-Way
Dark Antique Nickel Finish
Oyster Linen Shade

FINISH/SHADE OPTION:
Z2162 Deep Patina Bronze
Driftwood Linen Shade

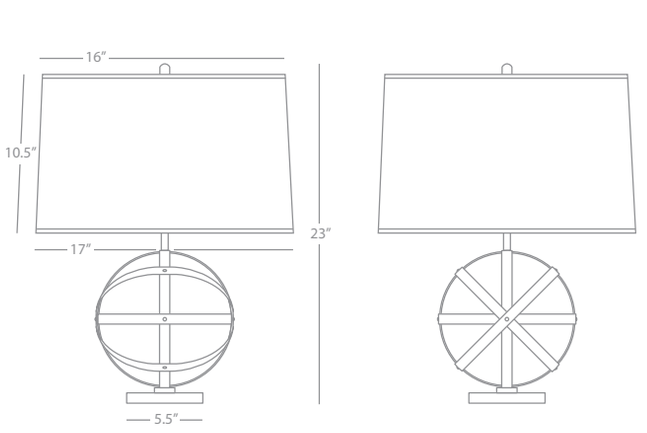

LUCY

Z2160
Table Lamp

1 - 150W Max.
Bulb Type: A
Switch: 3-Way
Deep Patina Bronze FInish
Driftwood Linen Shade

FINISH/SHADE OPTION:
D2160 Dark Antique Nickel
Oyster Linen Shade

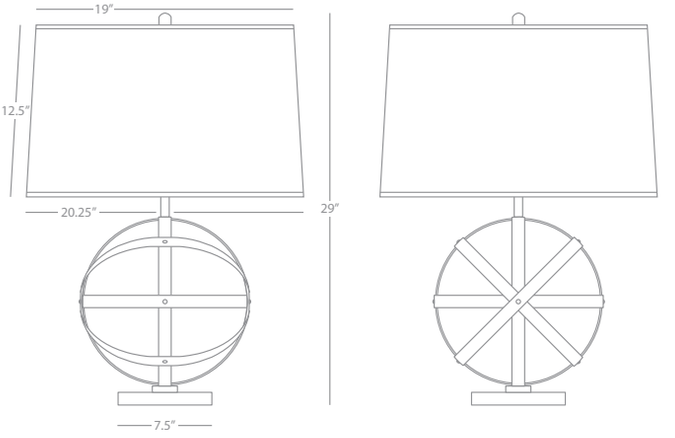

LUCY

D2161
Large Table Lamp

1 - 150W Max.
Bulb Type: A
Switch: 3-Way
Dark Antique Nickel Finish
Oyster Linen Shade

FINISH/SHADE OPTION:
Z2161 Deep Patina Bronze
Driftwood Linen Shade



Z2163



D2163



Z2164



D2165

Lucy

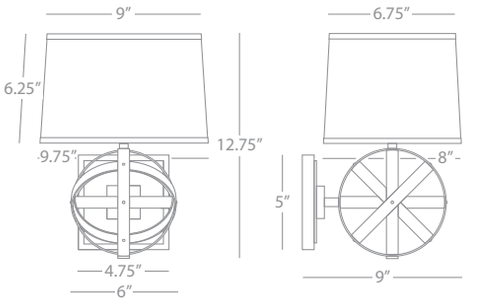

LUCY

D2163

Wall Sconce

1 - 60W Max.
Bulb Type: G16.5 Candelabra
Switch: On-Off Line Switch
24" Cord Cover/Direct Wire
Dark Antique Nickel Finish
Oval Oyster Linen Shade

FINISH/SHADE OPTION:
Z2163 Deep Patina Bronze
Driftwood Linen Shade

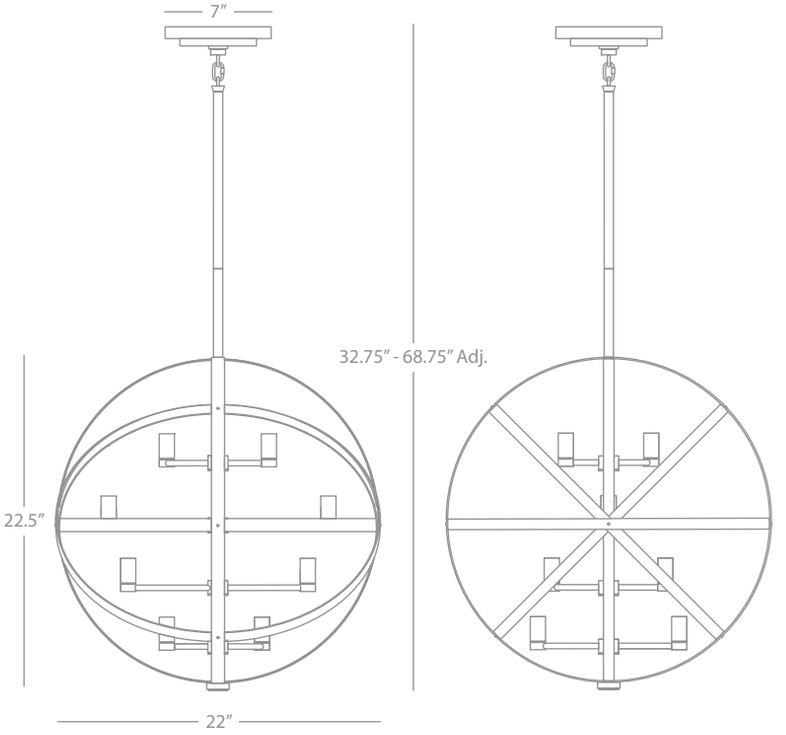

LUCY

Z2164

8-Light Pendant

8 - 60W Max.
Bulb Type: B, Candelabra
Direct Wire
Deep Patina Bronze Finish
Susp. Hardware: 3 pcs. 5/8" x 12" &
1 pc. 5/8" x 6" Extensions

FINISH OPTION:
D2164 Dark Antique Nickel

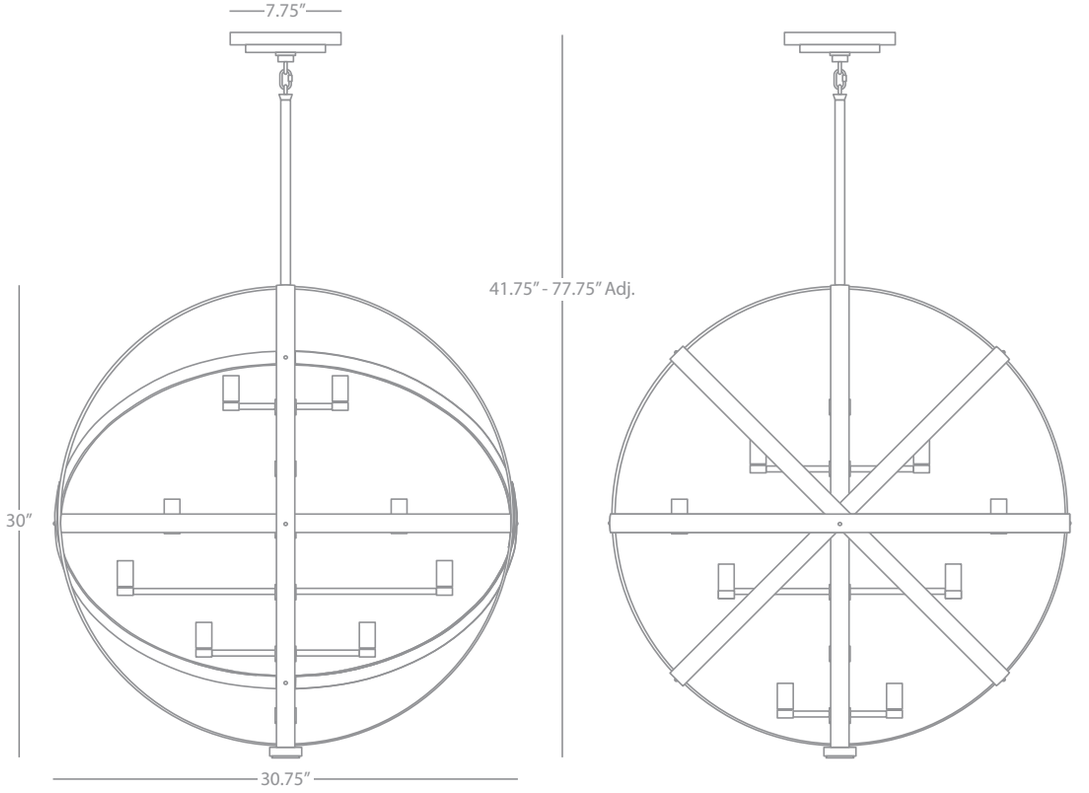

LUCY

D2165

12-Light Pendant

12 - 60W Max.
Bulb Type: B, Candelabra
Direct Wire
Dark Antique Nickel Finish
Susp. Hardware: 3 pcs. 5/8" x 12" &
1 pc. 5/8" x 6" Extensions

FINISH OPTION:
Z2165 Deep Patina Bronze



S2168



Z2169



Z2167

Petriolo

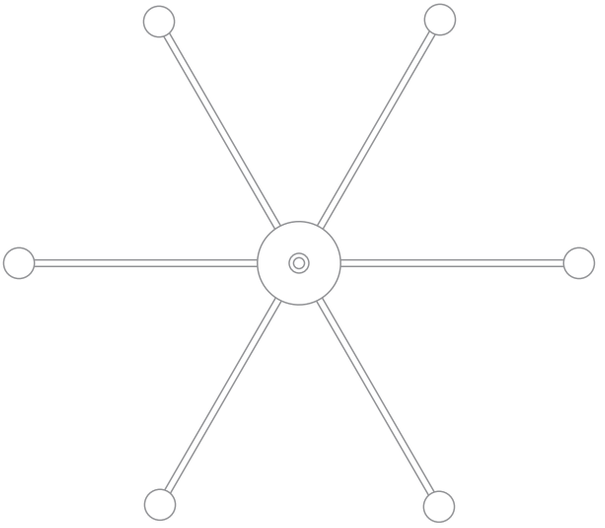

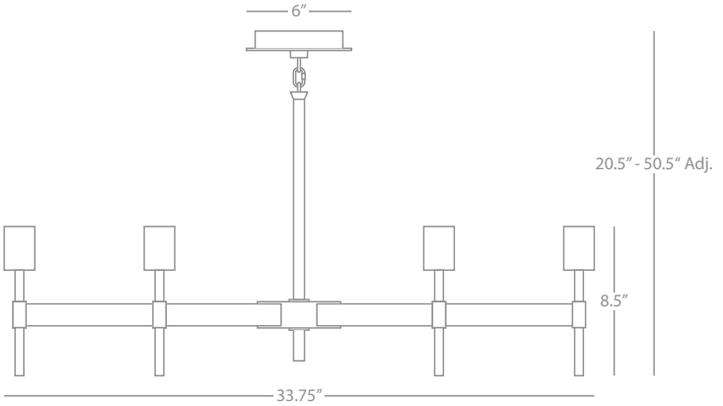

PETRIOLO

Z2169

Wall Sconce

1 - 60W Max.
Bulb Type: A
24" Cord Cover/Direct Wire
Deep Patina Bronze Finish

Photographed with Historical Bulb
SOLD SEPARATELY (Style # HIS01)
See Page 202

FINISH OPTION:
S2169 Stainless Steel

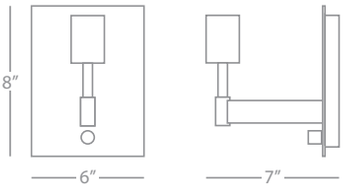

PETRIOLO

S2168

6-Light Chandelier

6 - 60W Max.
Bulb Type: A
Direct Wire
Stainless Steel Finish
Susp. Hardware: 3 pcs. 5/8" x 12" & 1 pc. 5/8" x 6" Extensions

Photographed with Historical Bulbs
SOLD SEPARATELY (Style # BUL06)
See Page 202

FINISH OPTION:
Z2168 Deep Patina Bronze

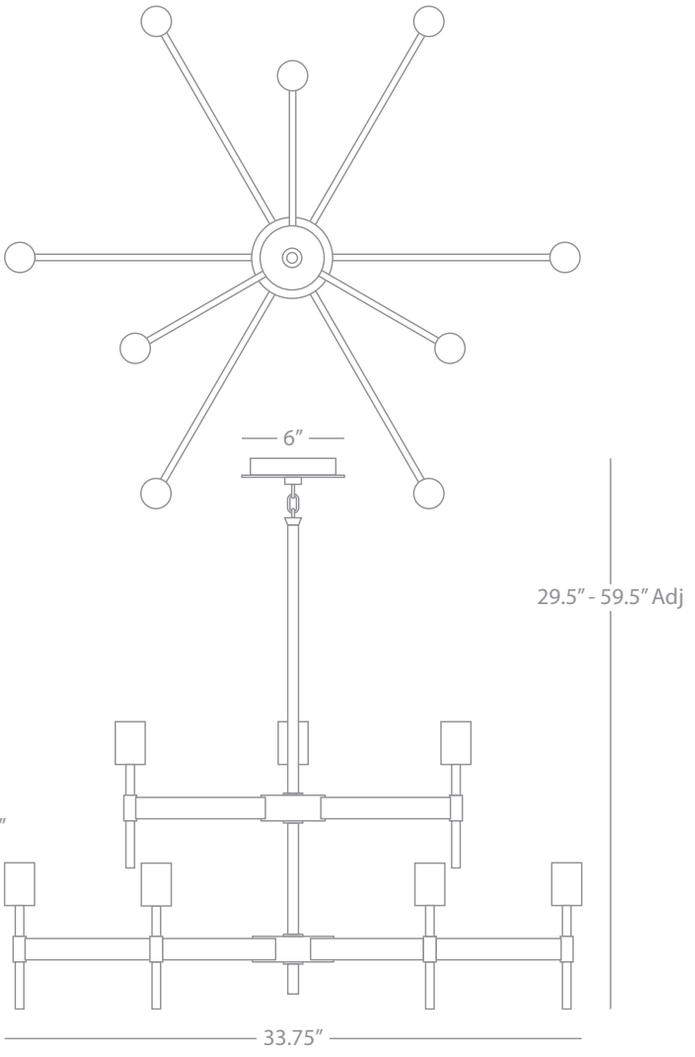

PETRIOLO

Z2167

2-Tier Chandelier

9 - 60W Max.
Bulb Type: A
Direct Wire
Deep Patina Bronze Finish
Susp. Hardware: 3 pcs. 5/8" x 12" & 1 pc. 5/8" x 6" Extensions

Photographed with Historical Bulbs
SOLD SEPARATELY (Style # BUL09)
See Page 202

FINISH OPTION:
S2167 Stainless Steel



Z2170



S2184



S2181



Z2175

Echo

ECHO

S2184
Accent Lamp

1 - 60W Max.
Bulb Type: G16.5 Candelabra
Switch: On-Off Line Switch
Stainless Steel Finish
Fondine Fabric Shade

FINISH OPTION:
Z2174 Deep Patina Bronze

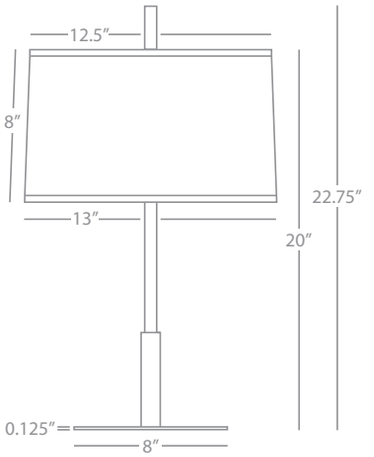

ECHO

Z2175
Buffet Lamp

1 - 60W Max.
Bulb Type: G16.5 Candelabra
Switch: On-Off Line Switch
Deep Patina Bronze Finish
Fondine Fabric Shade

FINISH OPTION:
S2185 Stainless Steel

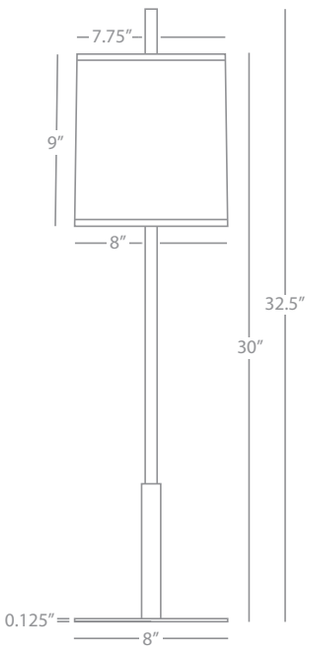

ECHO

Z2170
Table Lamp

1 - 150W Max.
Bulb Type: A
Switch: 3-Way
Deep Patina Bronze Finish
Fondine Fabric Shade

FINISH OPTION:
S2180 Stainless Steel

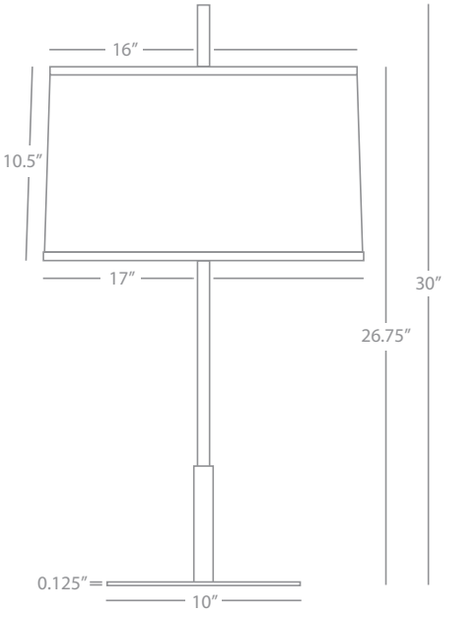

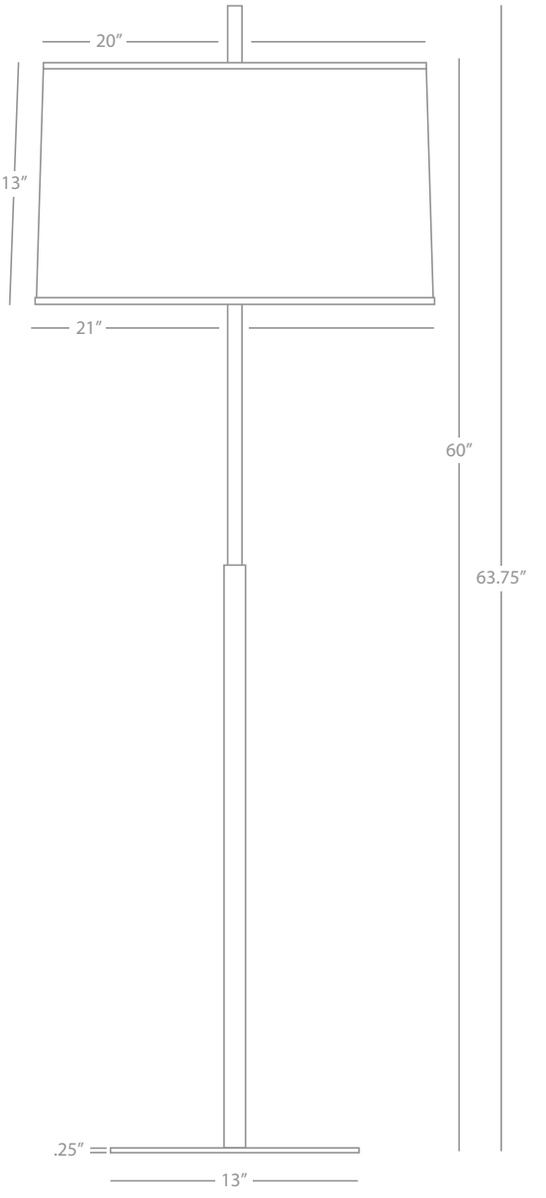

ECHO

S2181
Floor Lamp

1 - 150W Max.
Bulb Type: A
Switch: 3-Way
Stainless Steel Finish
Fondine Fabric Shade

FINISH OPTION:
Z2171 Deep Patina Bronze



Z2179



Z2172



S2186



S2188

Echo

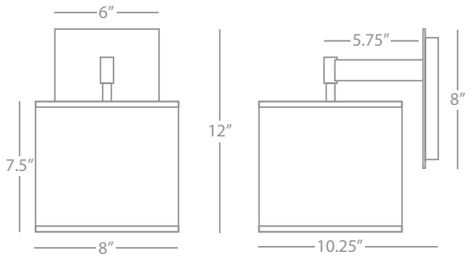

ECHO

Z2172
Wall Sconce

1 - 60W Max.
Bulb Type: B, Candelabra
Switch: On-Off Line Switch
24" Cord Cover/Direct Wire
Deep Patina Bronze Finish
Fondine Fabric Shade

FINISH OPTION:
S2182 Stainless Steel

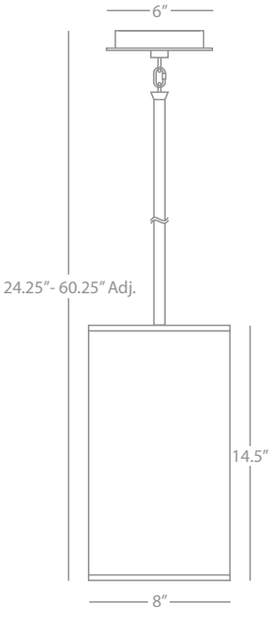

ECHO

S2186
Narrow Pendant

1 - 60W Max.
Bulb Type: B, Candelabra
Direct Wire Only
Stainless Steel Finish
Fondine Fabric Shade
Susp. Hardware: 3 pcs. 5/8" x 12" &
1 pc. 5/8" x 6" Extensions

FINISH OPTION:
Z2176 Deep Patina Bronze

ECHO

Z2179
Pendant

3 - 100W Max.
Bulb Type: A
Direct Wire Only
Deep Patina Bronze Finish
Fondine Fabric Shade
19" Dia. Acrylic Diffuser
Susp. Hardware: 3 pcs. 5/8" x 12" &
1 pc. 5/8" x 6" Extensions

FINISH OPTION:
S2189 Stainless Steel

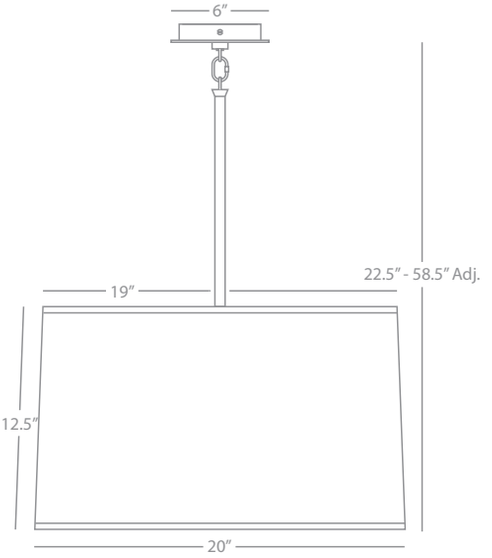

ECHO

S2188
6-Light Chandelier

6 - 60W Max.
Bulb Type: G16.5 Candelabra
Direct Wire Only
Stainless Steel Finish
Fondine Fabric Shades
Susp. Hardware: 3 pcs. 5/8" x 12"
& 1 pc. 5/8" x 6" Extensions

FINISH OPTION:
Z2178 Deep Patina Bronze

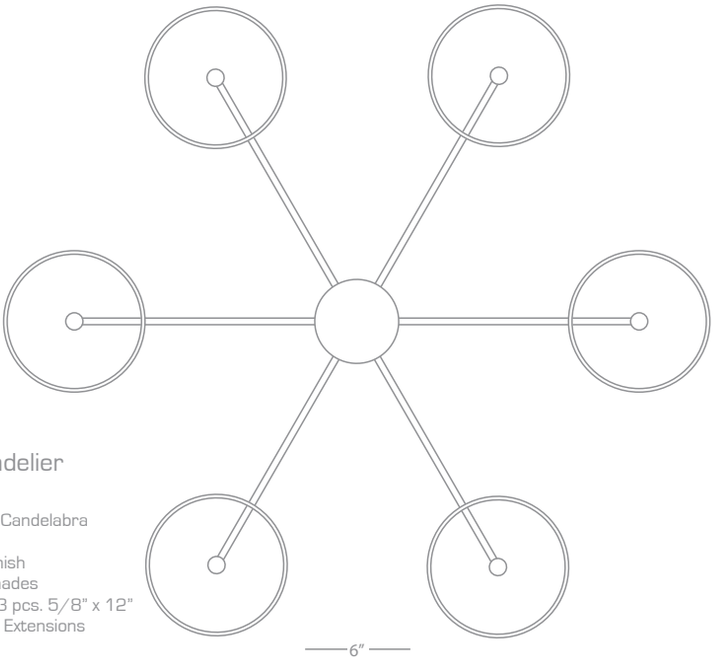

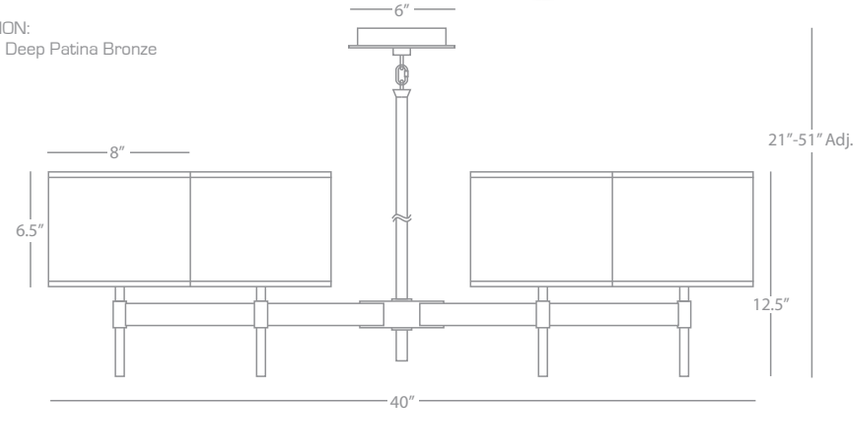



S2156



Z2156

Echo

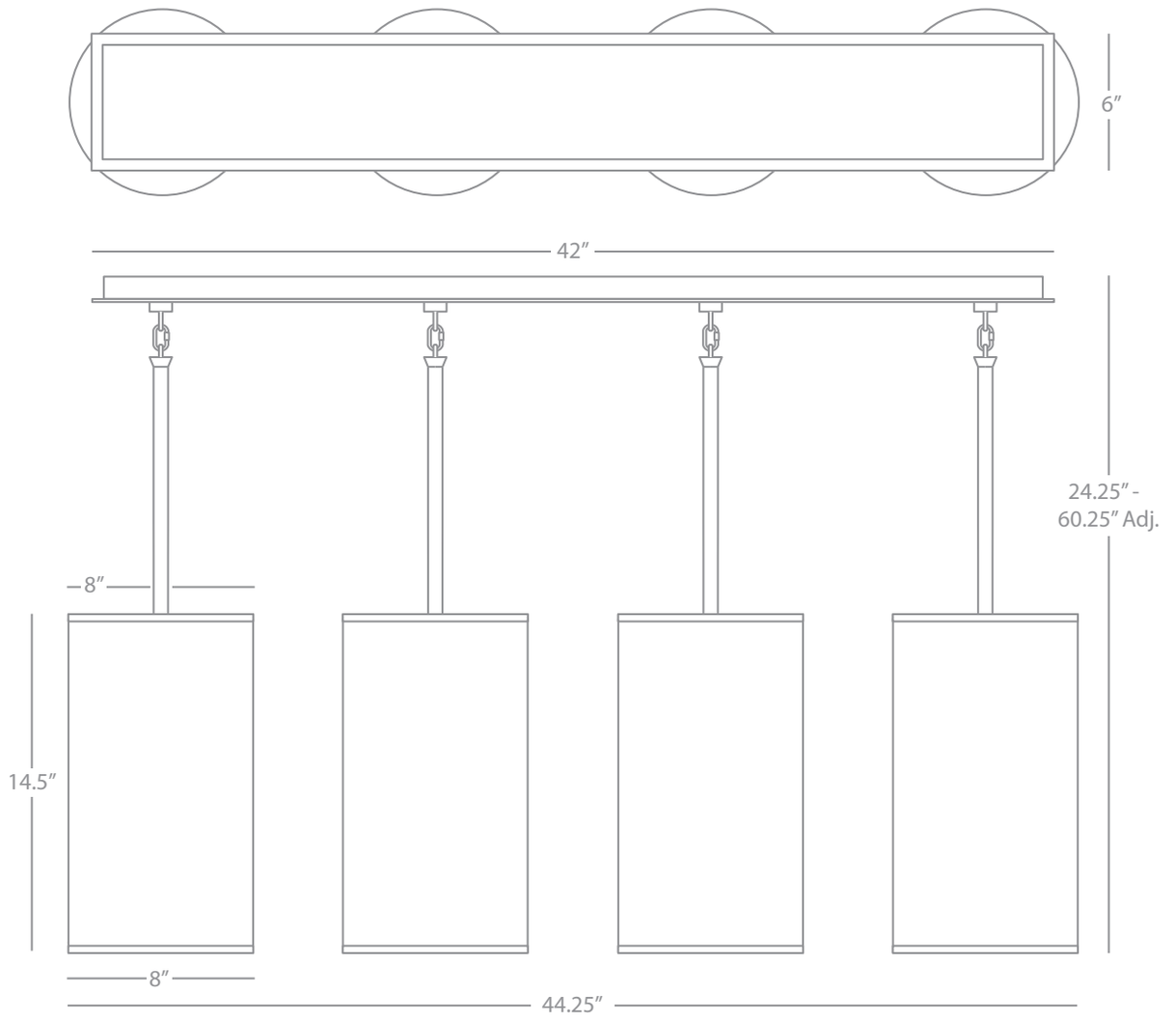

ECHO

S2156

Linear Chandelier

4 - 60W Max.
Bulb Type: B, Candelabra
Direct Wire
Stainless Steel Finish
Ascot White Fabric Shades
Susp. Hardware: 12 pcs. 5/8" x 12" &
4 pcs. 5/8" x 6" Extensions

FINISH OPTION:
Z2156 Deep Patina Bronze



S2190



Z2181



Z2184



S2195

Saturnia

SATURNIA

Z2184
Accent Lamp

1 - 60W Max.
Bulb Type: G16.5
Switch: On-Off Line Switch
Deep Patina Bronze Finish
Bronze Transparent Fabric Exterior Shade w/
Ascot White Fabric Interior Shade

FINISH/SHADE OPTION:
S2194 Stainless Steel Finish
Silver Transparent Fabric
Exterior Shade w/ Ascot White
Fabric Interior Shade

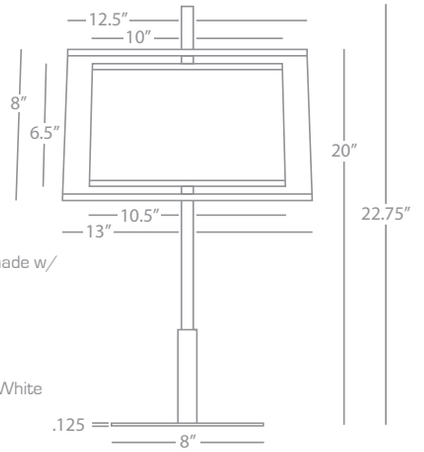

SATURNIA

S2195
Buffet Table Lamp

1 - 60W Max.
Bulb Type: G16.5
Switch: On-Off Line Switch
Stainless Steel Finish
Silver Transparent Fabric Exterior Shade w/
Ascot White Fabric Interior Shade

FINISH/SHADE OPTION:
Z2185 Deep Patina Bronze Finish
Bronze Transparent Fabric
Exterior Shade w/ Ascot White
Fabric Interior Shade

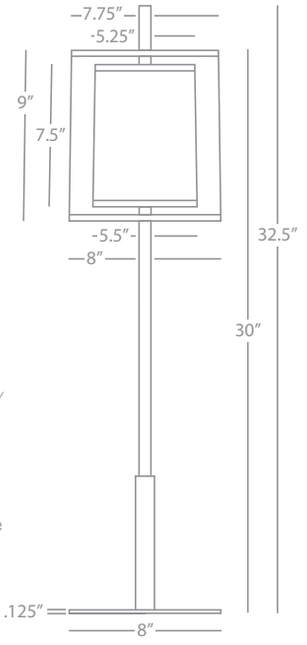

SATURNIA

S2190
Table Lamp

1 - 150W Max.
Bulb Type: A
Switch: 3-Way
Stainless Steel Finish
Silver Transparent Fabric Exterior Shade w/
Ascot White Fabric Interior Shade

FINISH/SHADE OPTION:
Z2180 Deep Patina Bronze Finish
Bronze Transparent Fabric
Exterior Shade w/ Ascot White
Fabric Interior Shade

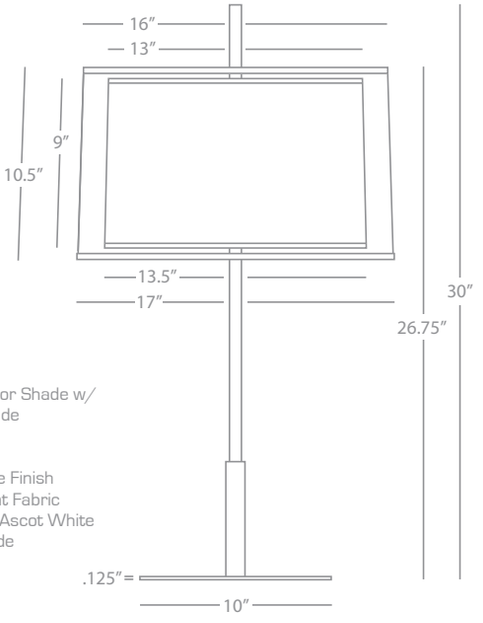

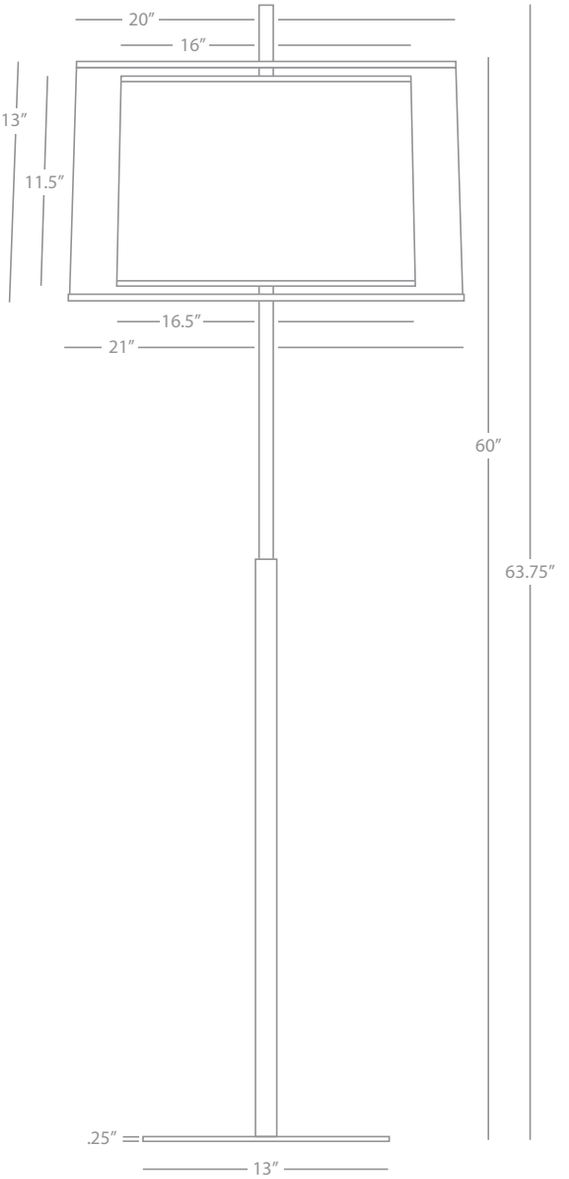

SATURNIA

Z2181
Floor Lamp

1 - 150W Max.
Bulb Type: A
Switch: 3-Way
Deep Patina Bronze Finish
Bronze Transparent Fabric Exterior Shade w/
Ascot White Fabric Interior Shade

FINISH/SHADE OPTION:
S2191 Stainless Steel Finish
Silver Transparent Fabric
Exterior Shade w/ Ascot White
Fabric Interior Shade



S2192



Z2187



S2193



S2196



Z2188

Saturnia

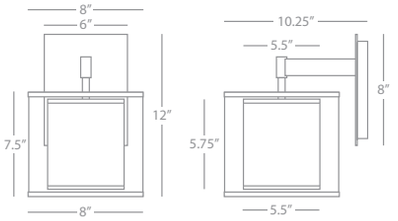

SATURNIA

S2192
Wall Sconce

1 - 60W Max.
Bulb Type: B, Candelabra
Switch: On-Off Line Switch
24" Cord Cover/Direct Wire
Stainless Steel Finish
Silver Transparent Fabric Exterior Shade
w/Ascot White Fabric Interior Shade

FINISH/SHADE OPTION:
Z2182 Deep Patina Bronze Finish
Bronze Transparent Fabric
Exterior Shade w/ Ascot
White Fabric Interior Shade

SATURNIA

Z2188
6-Light Chandelier

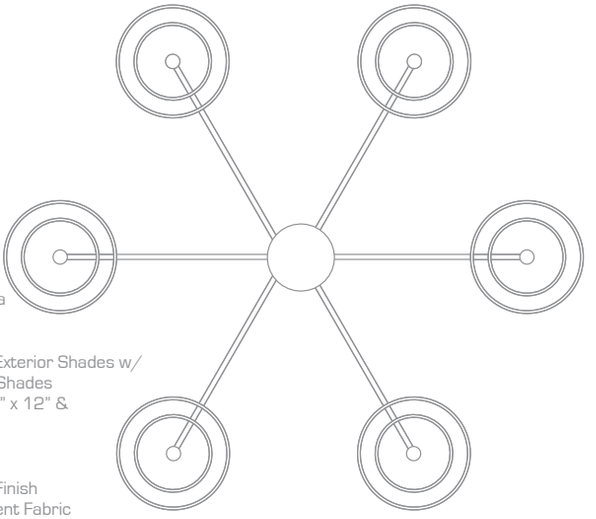

6 - 60W Max.
Bulb Type: G16.5 Candelabra
Direct Wire Only
Deep Patina Bronze Finish
Bronze Transparent Fabric Exterior Shades w/
Ascot White Fabric Interior Shades
Susp. Hardware: 3 pcs. 5/8" x 12" &
1 pc. 5/8" x 6" Extensions

FINISH/SHADE OPTION:
S2198 Stainless Steel Finish
Silver Transparent Fabric
Exterior Shade w/
Ascot White Fabric Interior Shades

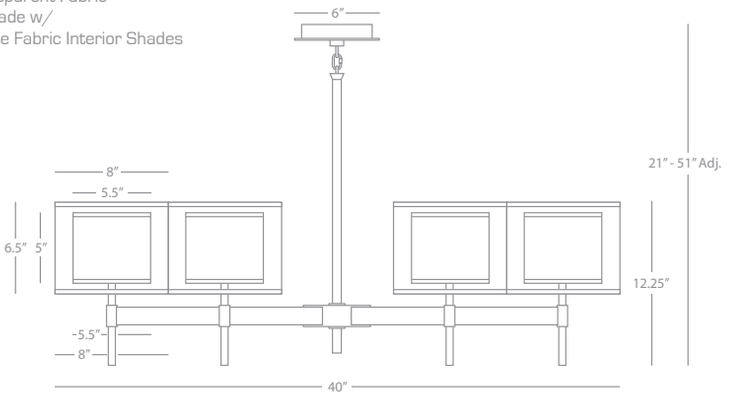

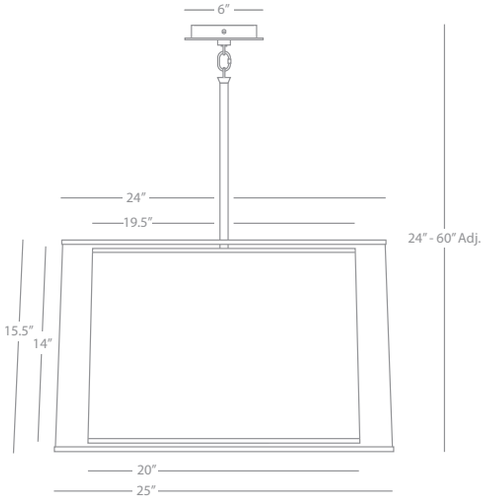

SATURNIA

S2193
Pendant

3 - 100W Max.
Bulb Type: A
Direct Wire Only
Stainless Steel Finish
Silver Transparent Fabric Exterior Shade w/
Ascot White Fabric Interior Shade
19" Dia. White Acrylic Diffuser
Susp. Hardware: 3 pcs. 5/8" x 12" &
1 pc. 5/8" x 6" Extensions

FINISH/SHADE OPTION:
Z2183 Deep Patina Bronze Finish
Bronze Transparent Fabric
Exterior Shade w/ Ascot White
Fabric Interior Shade

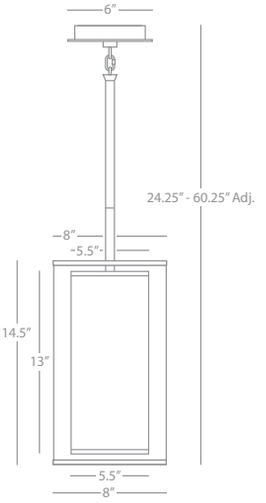

SATURNIA

S2196
Narrow Pendant

1 - 60W Max.
Bulb Type: B, Candleabra
Direct Wire Only
Stainless Steel Finish
Silver Transparent Fabric Exterior Shade
w/ Ascot White Fabric Interior Shade
Susp. Hardware: 3 pcs. 5/8" x 12" &
1 pc. 5/8" x 6" Extensions

FINISH/SHADE OPTION:
Z2186 Deep Patina Bronze Finish
Bronze Transparent Fabric
Exterior Shade w/ Ascot White
Fabric Interior Shade

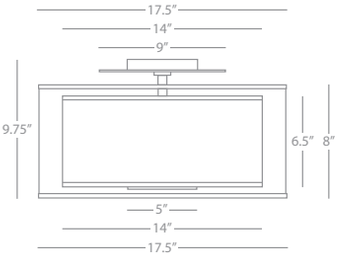

SATURNIA

Z2187
Semi-Flush Mount

2 - 100W Max.
Bulb Type: A
Direct Wire Only
Deep Patina Bronze Finish
Bronze Transparent Fabric Exterior Shade
w/ Ascot White Fabric Interior Shade
13.5" Dia. White Acrylic Diffuser

FINISH/SHADE OPTION:
S2197 Stainless Steel Finish
Silver Transparent Fabric
Exterior Shade w/ Ascot White
Fabric Interior Shade



S2155



Z2155

Saturnia

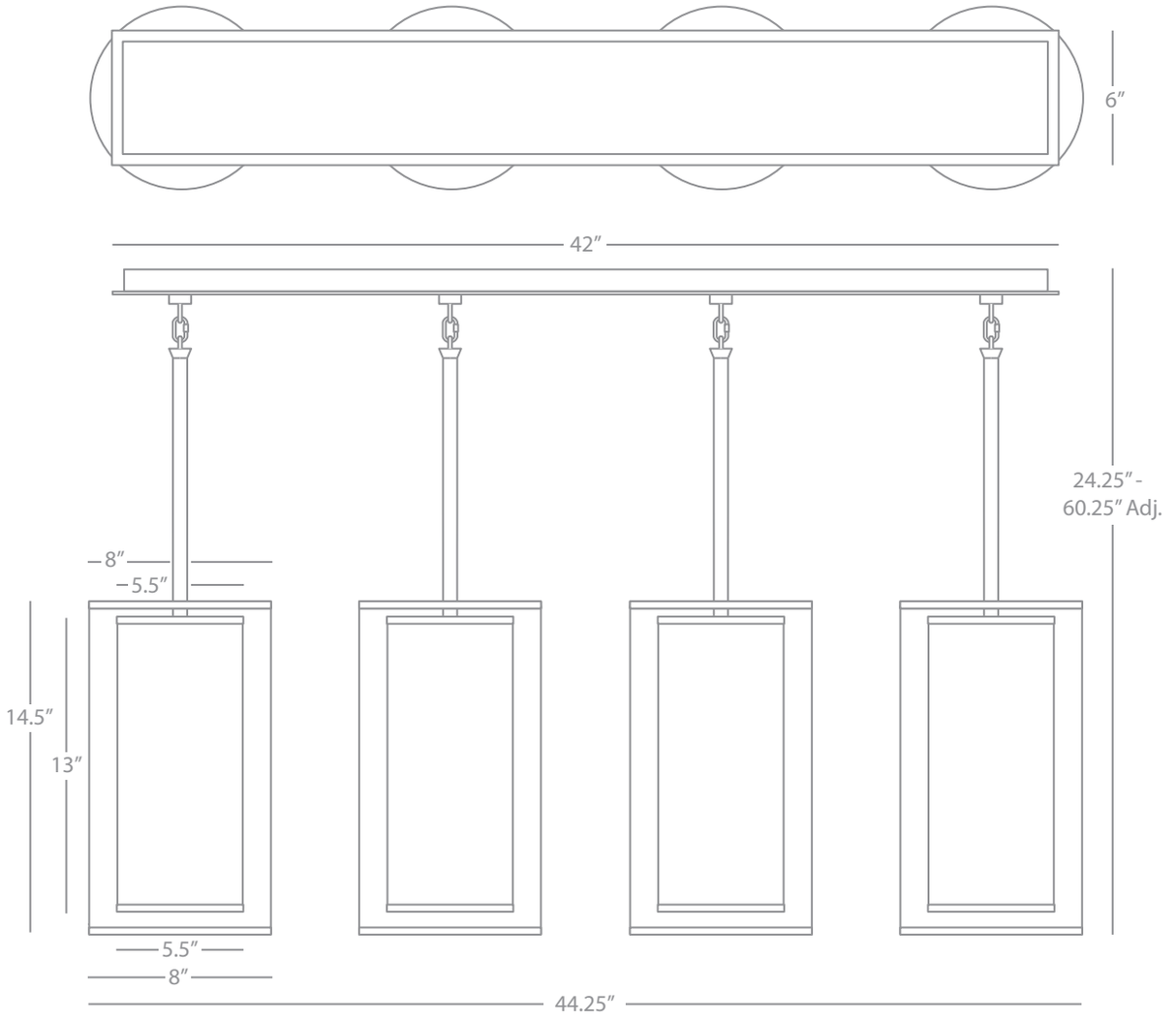

SATURNIA

S2155

Linear Chandelier

4 - 60W Max.
Bulb Type: B, Candelabra
Direct Wire
Stainless Steel Finish
Silver Transparent Fabric Exterior
Shade w/ Ascot White Fabric Interior Shade
Susp. Hardware: 12 pcs. 5/8" x 12" &
4 pcs. 5/8" x 6" Extensions

FINISH/SHADE OPTION:

Z2155 Deep Patina Bronze
Bronze Transparent Fabric
Exterior Shade w/ Ascot
White Fabric Interior Shade

Logan



2258



2792



2295B

Logan

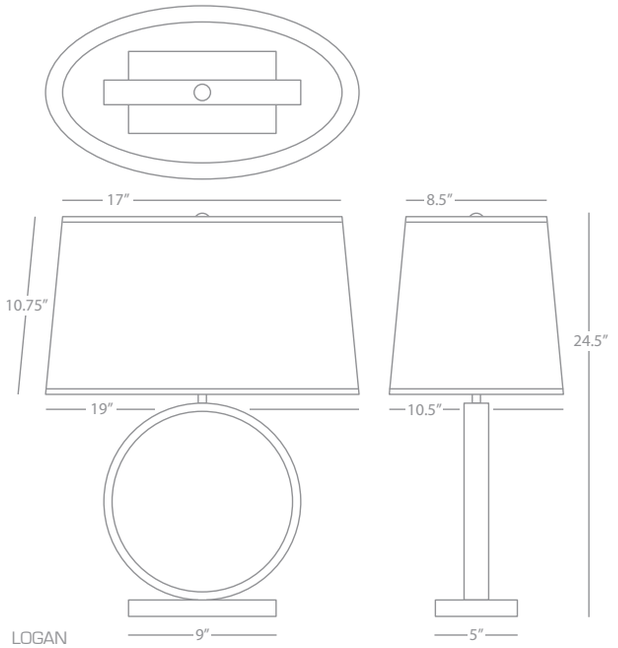

LOGAN

2295B

Table Lamp

1 - 150W Max.
Bulb Type: A
Switch: Hi-Lo Dimming
Aged Brass Finish
Travertine Stone Base
Oval Black Painted Opaque Parchment
Shade w/ Copper Foil Lining

FINISH/SHADE OPTIONS:

2295 Aged Brass/Travertine Stone
Oval Fondine Fabric Shade

2791 Polished Nickel/Carrera Marble
Ascot White Fabric

2791B Polished Nickel/Carrera Marble
Black Painted Opaque Parchment
w/ Silver Foil Lining

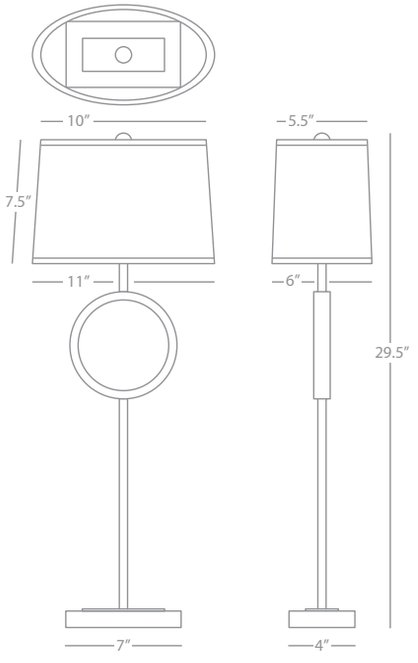

LOGAN

2792

Buffet Table Lamp

1 - 60W Max.
Bulb Type: B, Candelabra
Switch: Hi-Lo Line Switch
Polished Nickel Finish
Carrera Marble Base
Oval Ascot White Fabric Shade

FINISH/SHADE OPTIONS:

2792B Polished Nickel/Carrera Marble
Black Painted Opaque Parchment
w/ Silver Foil Lining

2257 Aged Brass/Travertine Stone
Fondine Fabric

2257B Aged Brass/Travertine Stone
Black Painted Opaque Parchment
w/ Copper Foil Lining

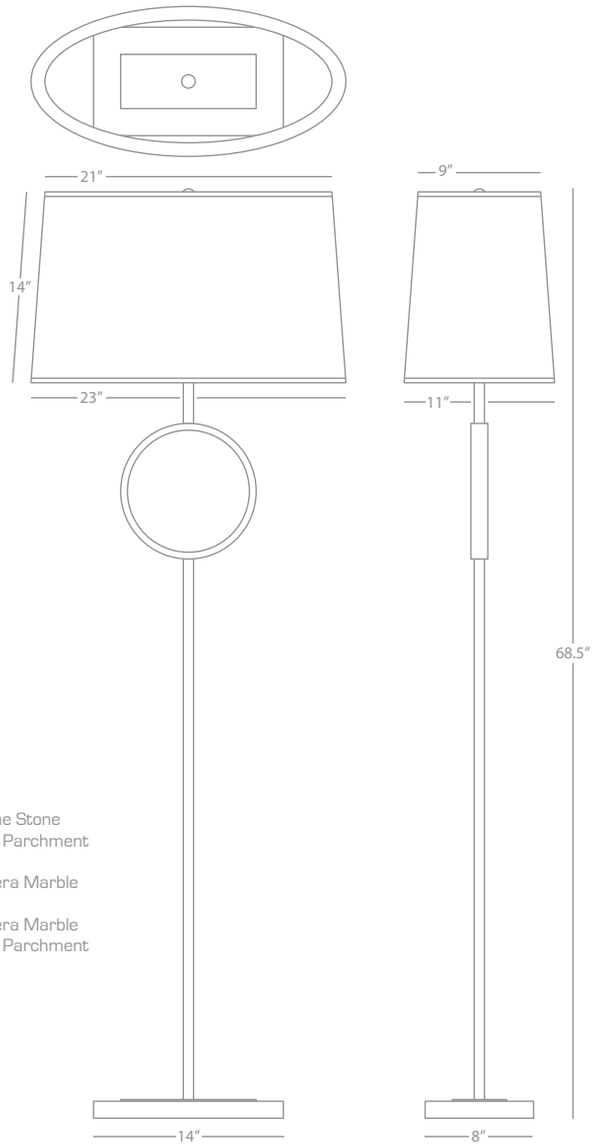

LOGAN

2258

Floor Lamp

1 - 150W Max.
Bulb Type: A
Switch: Hi-Lo Dimming
Aged Brass Finish
Travertine Stone Base
Oval Fondine Fabric Shade

FINISH/SHADE OPTIONS:

2258B Aged Brass/Travertine Stone
Black Painted Opaque Parchment
w/ Copper Foil Lining

2793 Polished Nickel/Carrera Marble
Ascot White Fabric

2793B Polished Nickel/Carrera Marble
Black Painted Opaque Parchment
w/ Silver Foil Lining



S2286

Archer

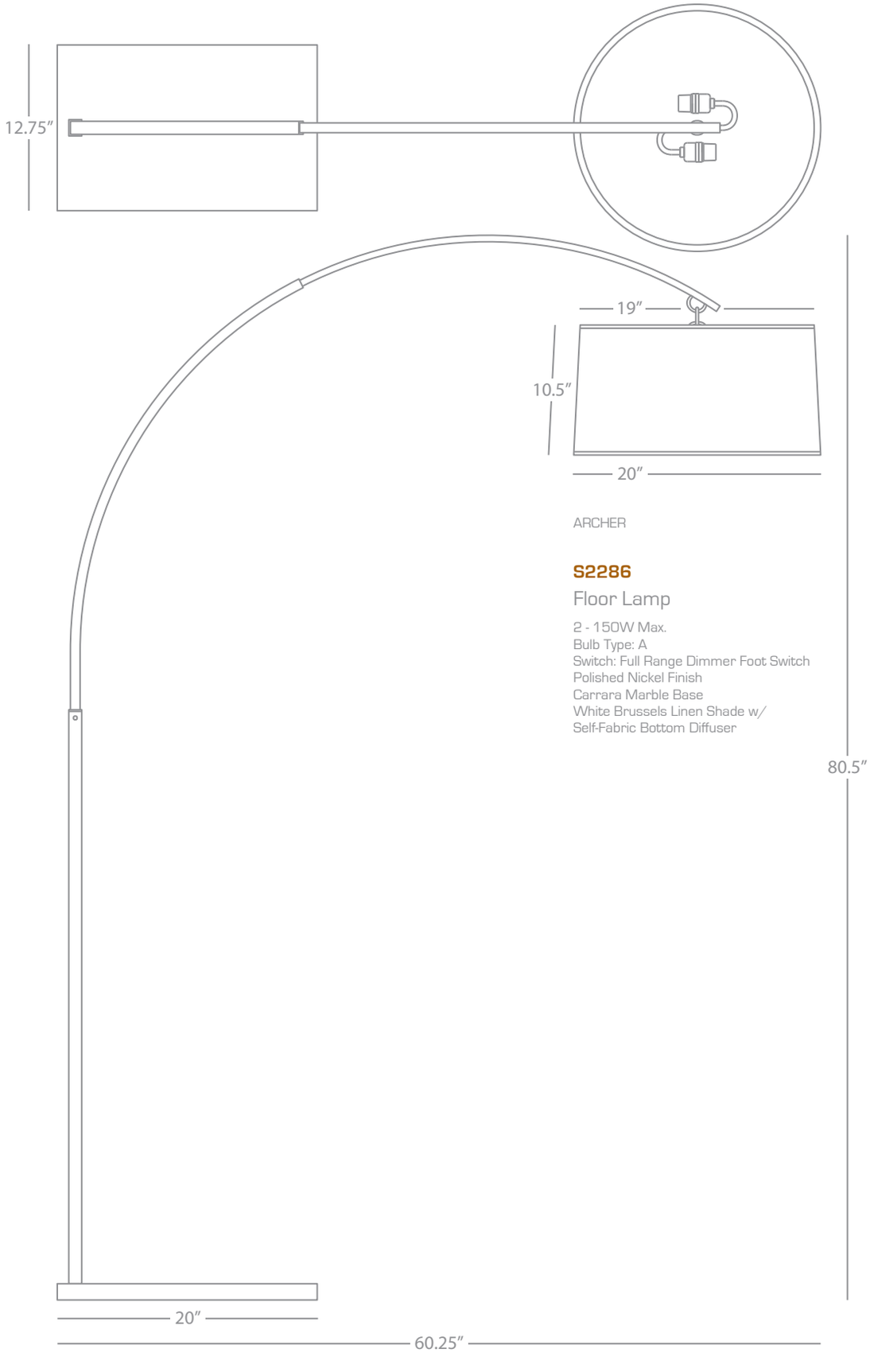

ARCHER

S2286

Floor Lamp

2 - 150W Max.
Bulb Type: A
Switch: Full Range Dimmer Foot Switch
Polished Nickel Finish
Carrara Marble Base
White Brussels Linen Shade w/
Self-Fabric Bottom Diffuser



S2355



2355

Wesley

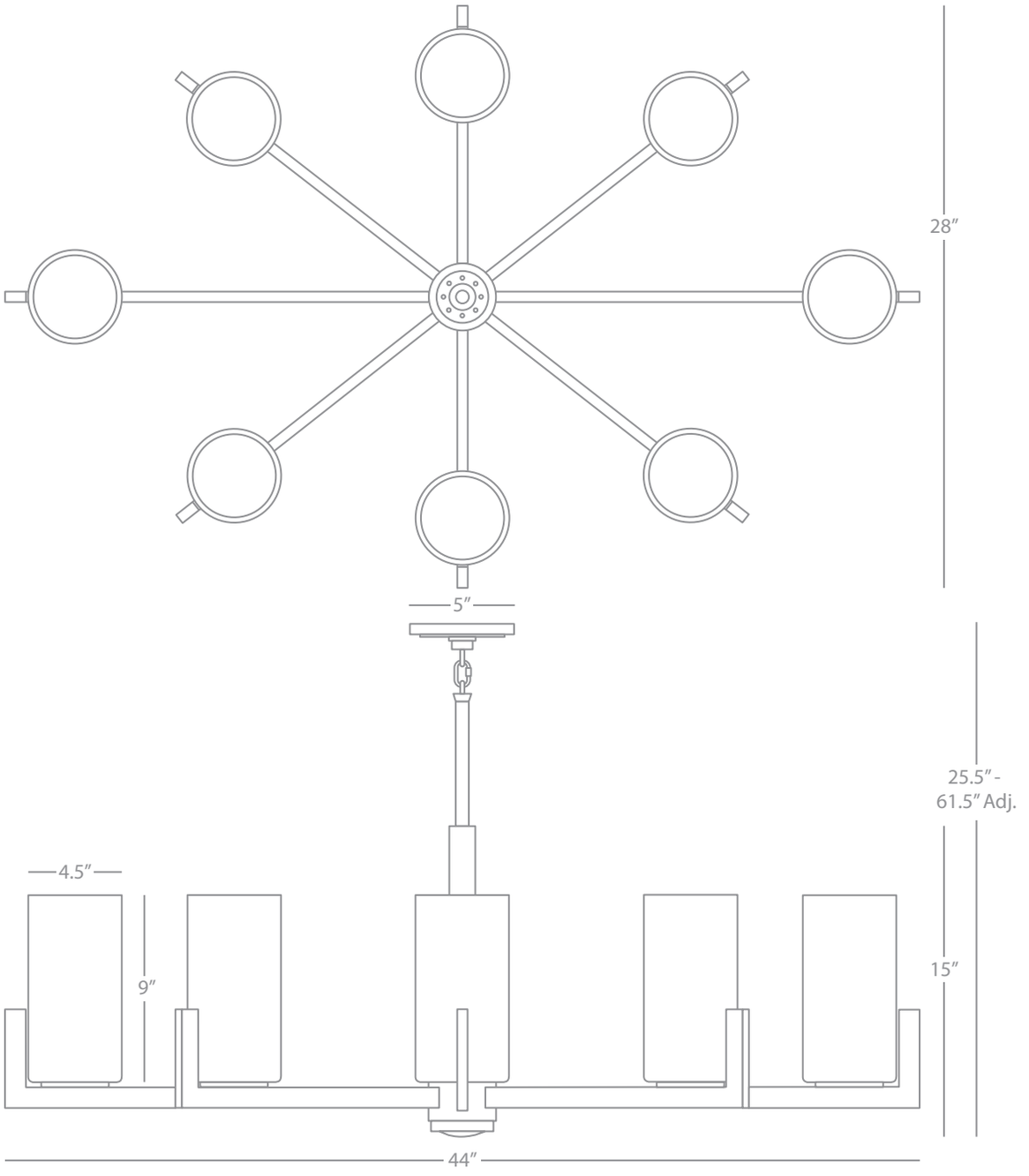

WESLEY

2355

Chandelier

8 - 60W Max.
Bulb Type: A
1 - 35W Max. for Down Light
Bulb Type: GU10 MR16 Halogen
Direct Wire
Aged Brass Finish
Frosted, White Cased Glass Shades
Susp. Hardware: 3 pcs. 5/8" x 12" &
1 pc. 5/8" x 6" Extensions

FINISH OPTION:
S2355 Polished Nickel

Mary McDonald Regine



2420



2421

Mary McDonald Regine

MARY MCDONALD REGINE

2420

Table Lamp

1 - 150W Max.
Bulb Type: A
Switch: Hi-Lo Dimming
Patina Nickel Finish
Antique Brass Accents
Patina Nickel Metal Shade

FINISH OPTION:
2421 Antique Brass Finish w/ Black Marble Accents

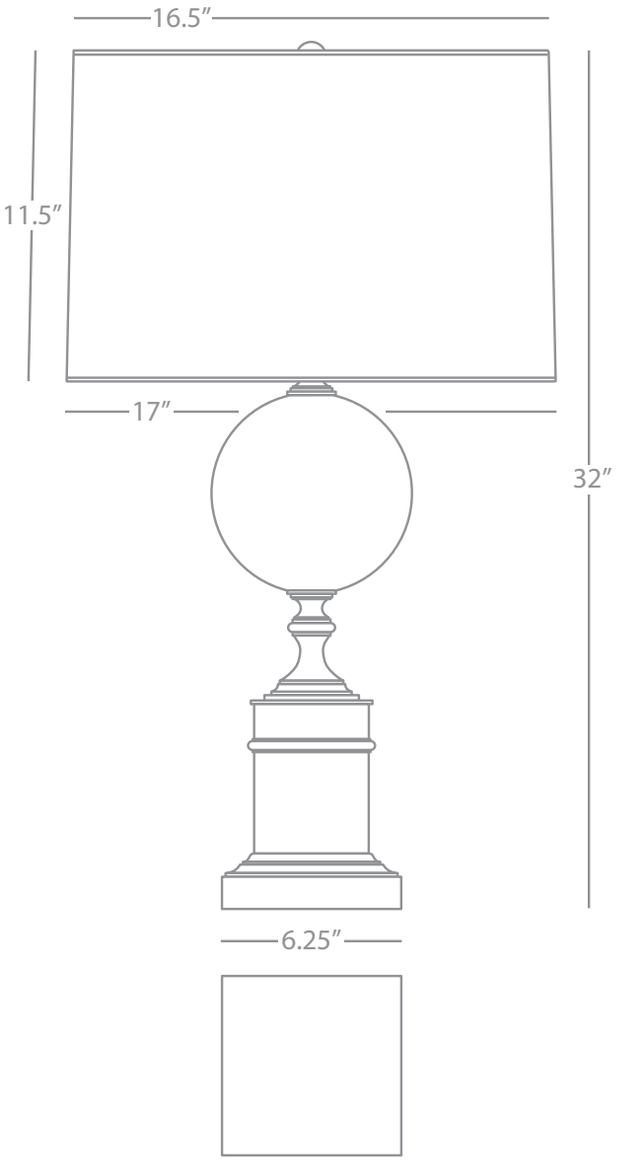



S2432



2433





2430

S2431

Zoltar

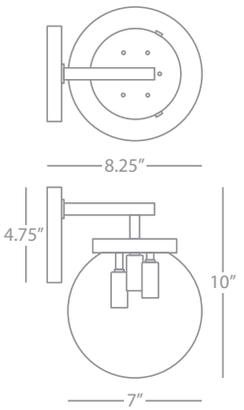

ZOLTAR

S2432

Wall Sconce

3 - 25W Max.
Bulb Type: B, Candelabra
Switch: On-Off Line Switch
24" Cord Cover/Direct Wire
Polished Nickel Finish
Clear Glass Shade

FINISH OPTION:
2432 Antique Brass

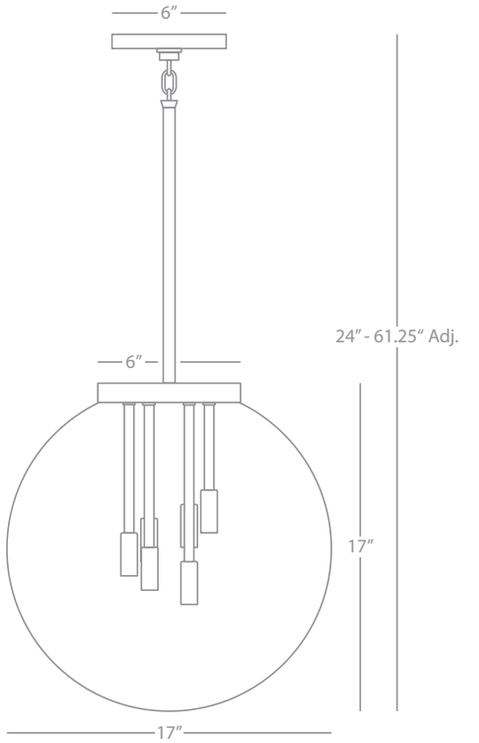

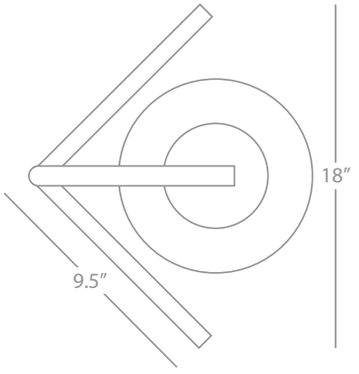

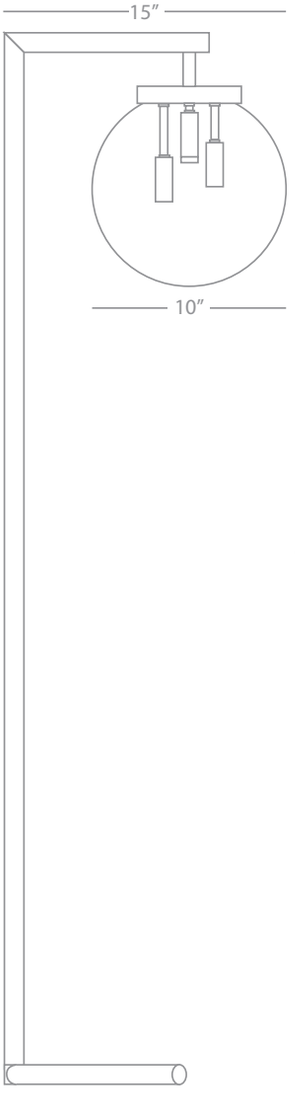

ZOLTAR

S2431

Floor Lamp

4 - 25W Max.
Bulb Type: B, Candelabra
Switch: Full Range Dimmer Foot Switch
Polished Nickel Finish
Clear Glass Shade

FINISH OPTION:
2431 Antique Brass

ZOLTAR

2433

Pendant

6 - 25W Max.
Bulb Type: B, Candelabra
Direct Wire
Antique Brass Finish
Clear Glass Shade
Susp. Hardware: 3 pcs. 5/8" x 12"
& 1 pc. 5/8" x 6" Extensions

FINISH OPTION:
S2433 Polished Nickel

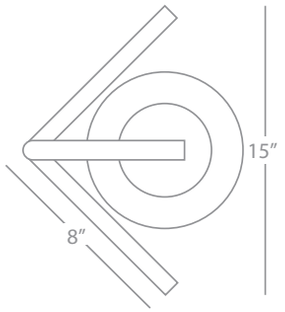

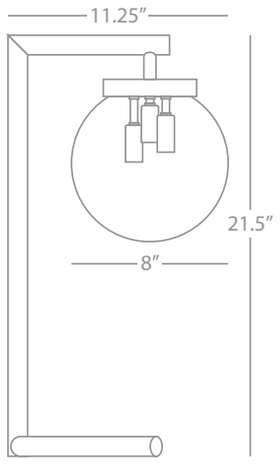

ZOLTAR

2430

Table Lamp

3 - 25W Max.
Bulb Type: B, Candelabra
Switch: Full Range Dimmer Line Switch
Antique Brass Finish
Clear Glass Shade

FINISH OPTION:
S2430 Polished Nickel

Mary McDonald Annika



2506X



2605



2504



2604X



2501



2503X



2600

Mary McDonald Annika

MARY MCDONALD ANNIKA

2506X
Accent Lamp

1 - 60W Max.
Bulb Type: B, Candelabra
Switch: On-Off Line Switch
Chocolate Lacquered Paint w/
Natural Brass & Ivory Crackle Accents
Cloud Cream Silk Shade

FINISH/SHADE OPTIONS:

2504	Cobalt Lacquered Paint Cobalt Painted Parchment Shade
2504X	Cobalt Lacquered Paint Cloud Cream Silk Shade
2505	Red Lacquered Paint Red Painted Parchment Shade
2505X	Red Lacquered Paint Cloud Cream Silk Shade
2506	Chocolate Lacquered Paint Chocolate Painted Parchment Shade
2507	Black Lacquered Paint Black Painted Parchment Shade
2507X	Black Lacquered Paint Cloud Cream Silk Shade
2603	Tangerine Lacquered Paint Tangerine Painted Parchment Shade
2603X	Tangerine Lacquered Paint Cloud Cream Silk Shade
2604	Ivory Lacquered Paint Ivory Painted Parchment Shade
2604X	Ivory Lacquered Paint Cloud Cream Silk Shade
2605	Blush Lacquered Paint Blush Painted Parchment Shade
2605X	Blush Lacquered Paint Cloud Cream Silk Shade

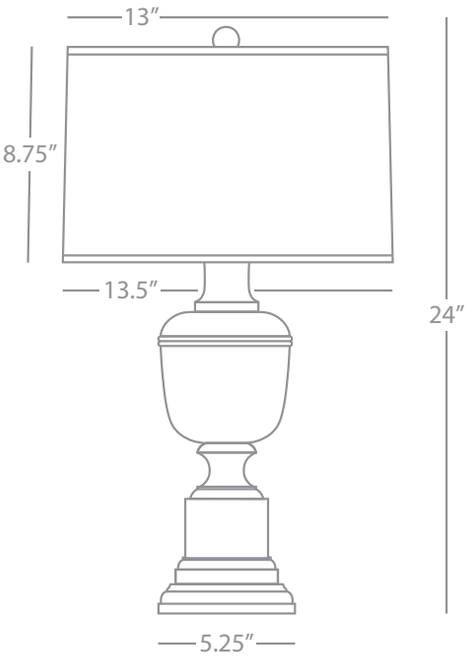

MARY MCDONALD ANNIKA

2501
Table Lamp

1 - 150W Max.
Bulb Type: A
Switch: 3-Way
Red Lacquered Paint w/
Natural Brass & Ivory Crackle Accents
Red Painted Opaque Parchment Shade w/ Matte Gold Lining

FINISH/SHADE OPTIONS:

2500	Cobalt Lacquered Paint Cobalt Painted Parchment Shade
2500X	Cobalt Lacquered Paint Cloud Cream Silk Shade
2501X	Red Lacquered Paint Cloud Cream Silk Shade
2502	Chocolate Lacquered Paint Chocolate Painted Parchment Shade
2502X	Chocolate Lacquered Paint Cloud Cream Silk Shade
2503	Black Lacquered Paint Black Painted Parchment Shade
2503X	Black Lacquered Paint Cloud Cream Silk Shade
2600	Tangerine Lacquered Paint Tangerine Painted Parchment Shade
2600X	Tangerine Lacquered Paint Cloud Cream Silk Shade
2601	Ivory Lacquered Paint Ivory Painted Parchment Shade
2601X	Ivory Lacquered Paint Cloud Cream Silk Shade
2602	Blush Lacquered Paint Blush Painted Parchment Shade
2602X	Blush Lacquered Paint Cloud Cream Silk Shade

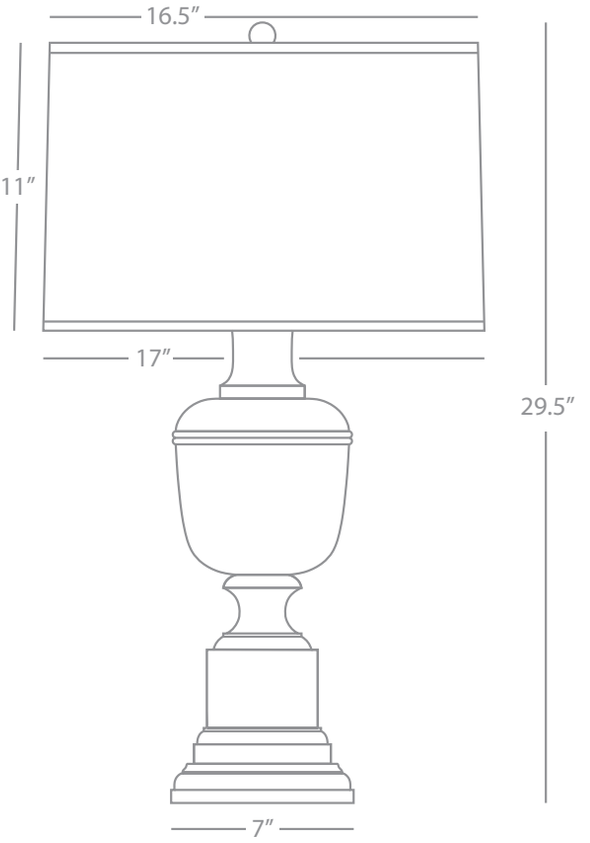

Mary McDonald Ondine



2513R



2517



2514



2516B



2515T

Mary McDonald Ondine

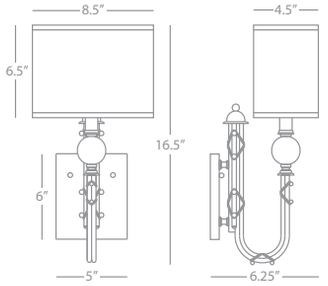

MARY MCDONALD ONDINE

2513R
Small Wall Sconce

1 - 60W Max.
Bulb Type: B, Candelabra
Direct Wire Only
Natural Brass Finish w/ Crystal Accents
Rectangular Ruby Red Side Pleat Silk Shade

FINISH/SHADE OPTIONS:

2513 Natural Brass
Off-White Silk Shade

2513B Natural Brass
Black Opaque Parchment Shade w/
Gold Tortoise Lining

2518 Silver Plate
Off-White Silk Shade

2518B Silver Plate
Black Opaque Parchment Shade w/
Silver Tortoise Lining

2518T Silver Plate
Taupe Opaque Parchment Shade w/
Matte Silver Lining

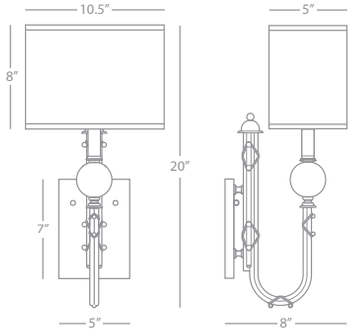

MARY MCDONALD ONDINE

2514
Large Wall Sconce

1 - 60W Max.
Bulb Type: B, Candelabra
Direct Wire Only
Natural Brass Finish w/ Crystal Accents
Rectangular Off-White Silk Shade

FINISH/SHADE OPTIONS:

2514B Natural Brass
Black Opaque Parchment Shade w/
Gold Tortoise Lining

2514R Natural Brass
Ruby Red Side Pleat Silk Shade

2519 Silver Plate
Off-White Silk Shade

2519B Silver Plate
Black Opaque Parchment Shade w/
Silver Tortoise Lining

2519T Silver Plate
Taupe Opaque Parchment Shade w/
Matte Silver Lining

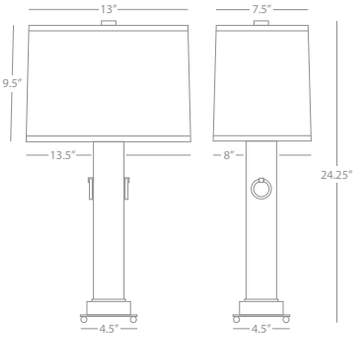

MARY MCDONALD ONDINE

2515T
Accent Lamp

1 - 100W Max.
Bulb Type: A
Switch: Hi-Lo
Silver Plate Finish
Rectangular Taupe Painted Opaque Parchment
Shade w/ Matte Silver Lining

SHADE OPTIONS:

2515 Off-White Silk Shade

2515B Black Opaque Parchment Shade w/
Silver Tortoise Lining

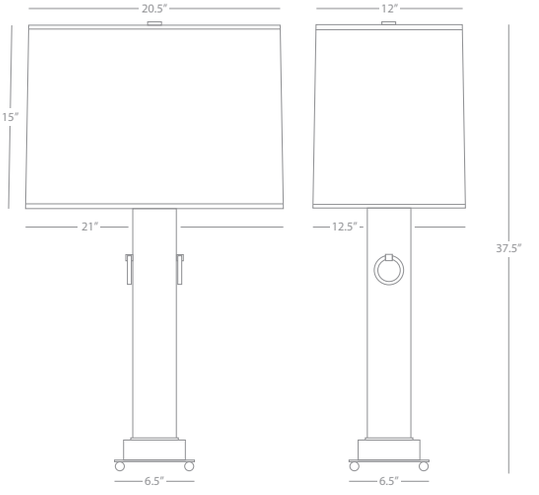

MARY MCDONALD ONDINE

2516B
Table Lamp

2 - 100W Max.
Bulb Type: A
Switch: On-Off Pull Chains
Silver Plate Finish
Rectangular Black Painted Opaque Parchment
Shade w/ Silver Tortoise Lining

SHADE OPTIONS:

2516 Off-White Silk Shade

2516T Taupe Opaque Parchment Shade w/
Matte Silver Lining

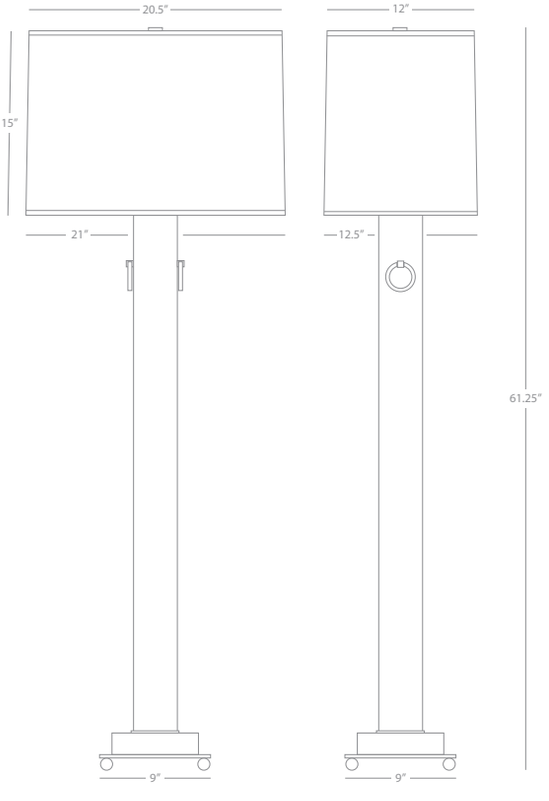

MARY MCDONALD ONDINE

2517
Floor Lamp

2 - 100W Max.
Bulb Type: A
Switch: On-Off Pull Chains
Silver Plate Finish
Rectangular Off-White Silk Shade

SHADE OPTIONS:

2517B Black Opaque Parchment Shade w/
Silver Tortoise Lining

2517T Taupe Opaque Parchment Shade w/
Matte Silver Lining

Mary McDonald Leopold



2531X



2531



2530



2530X

Mary McDonald Leopold

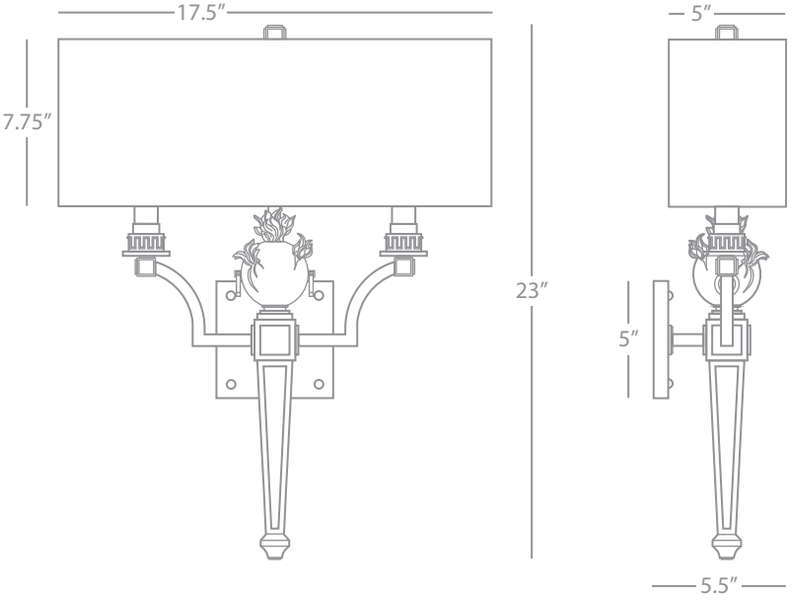

MARY MCDONALD LEOPOLD

2531
Wall Sconce

2 - 60W Max.
Bulb Type: B, Candelabra
Direct Wire Only
Natural Brass
Rectangular Ivory Cotton Shade w/
Rolled Edge Hem

SHADE OPTION:
2531X Charcoal Gray Cotton

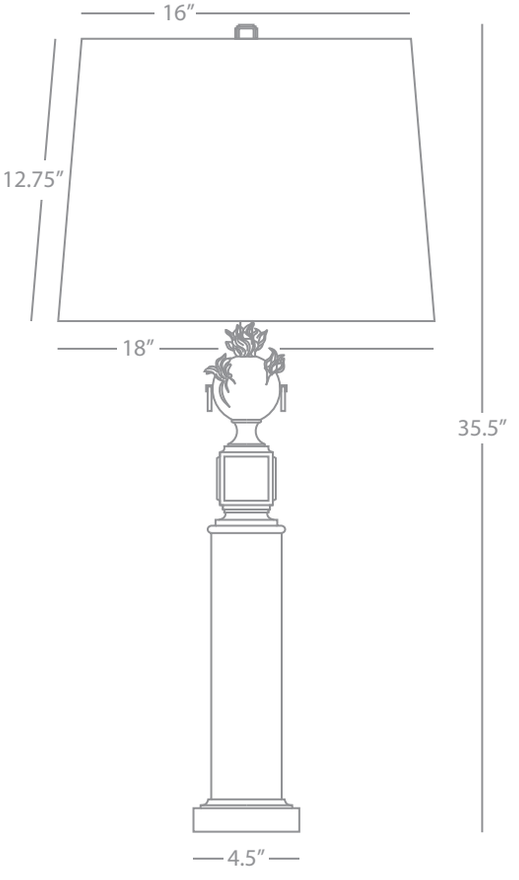

MARY MCDONALD LEOPOLD

2530X
Table Lamp

1 - 150W Max.
Bulb Type: A
Switch: 3-Way
Natural Brass
Charcoal Gray Cotton Shade w/
Rolled Edge Hem

SHADE OPTION:
2530 Ivory Cotton

Mary McDonald Cylindricus



2541



Z2541



2540B



Z2540

Mary McDonald Cylindricus

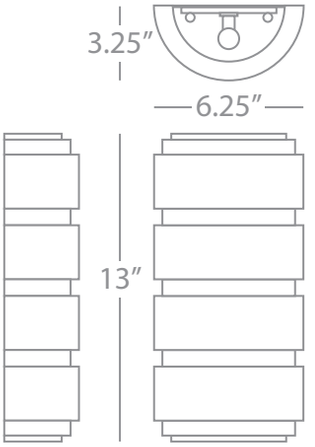

MARY MCDONALD CYLINDRICUS

2541

Half Round Sconce

2 - 60W Max.
Bulb Type: B, Candelabra
Direct Wire Only
Aged Brass Finish
Metal Shade

FINISH OPTION:
Z2541 Deep Patina Bronze

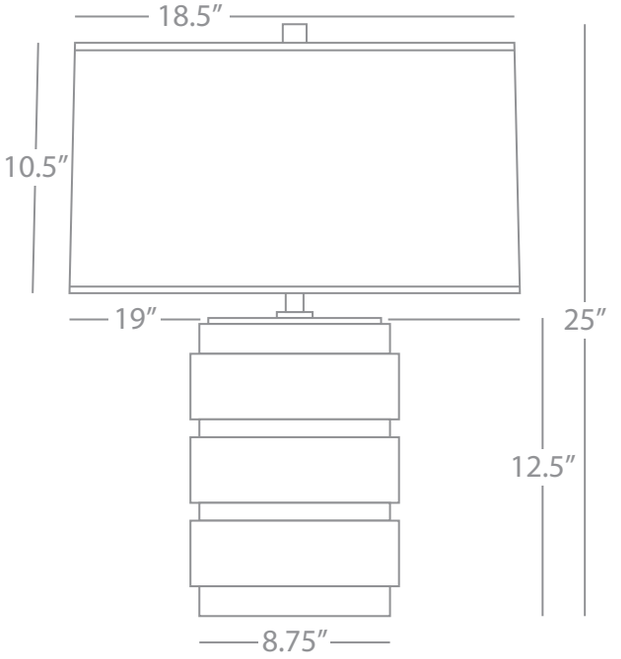

MARY MCDONALD CYLINDRICUS

2540B

Table Lamp

1 - 150W Max.
Bulb Type: A
Switch: Hi-Lo Dimming
Aged Brass Finish
Black Painted Opaque Parchment Shade
w/ Gold Tortoise Lining

FINISH/SHADE OPTIONS:
2540 Aged Brass
White Mont Blanc Parchment
Z2540 Deep Patina Bronze
White Mont Blanc Parchment

Mary McDonald Firenze



2546



2546B

Mary McDonald Firenze

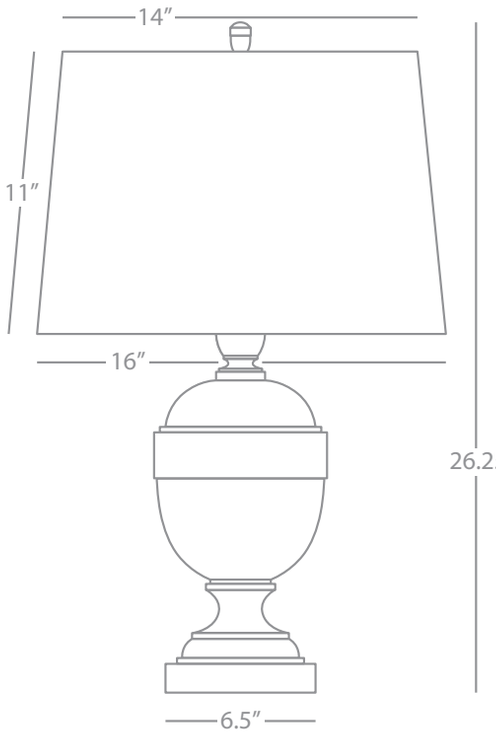

MARY MCDONALD FIRENZE

2546

Table Lamp

1 - 150W Max.
Bulb Type: A
Switch: Hi-Lo Dimming
Faux Malachite Lacquer &
Antique Brass Finish
Black and Ivory Accents
Cloud Cream Silk Shade

SHADE OPTION:
2546B Black Opaque Parchment w/
Matte Gold Lining

Mary McDonald Empire



E2547



G2547



B2547

Mary McDonald Empire

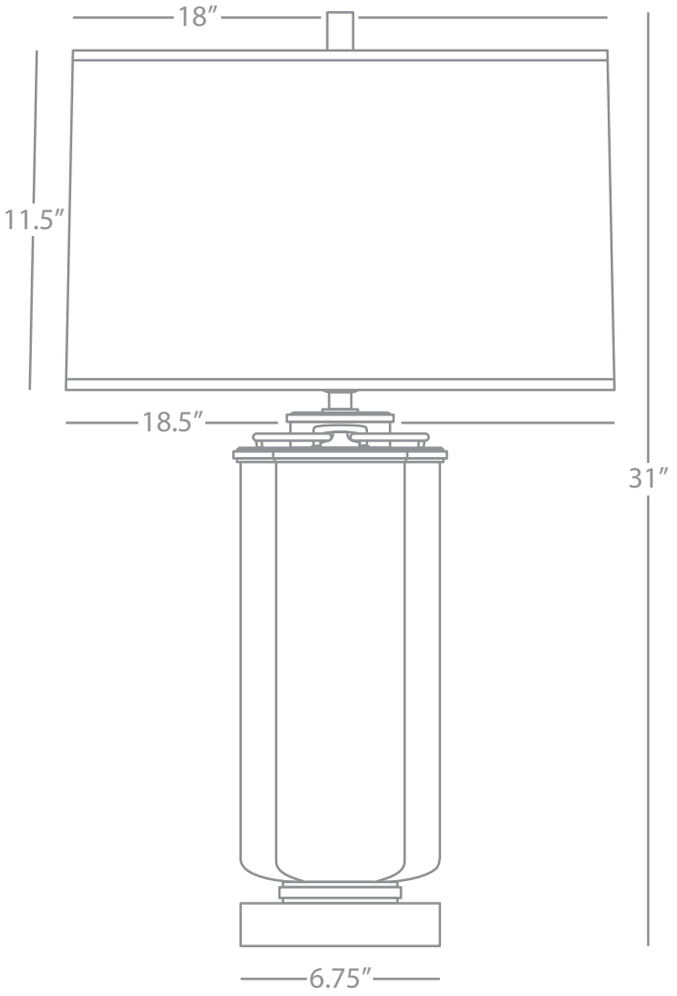

MARY MCDONALD EMPIRE

B2547

Table Lamp

1 - 150W Max.
Bulb Type: A
Switch: Hi-Lo Dimming
Cadet Blue Glazed Ceramic
Deep Patina Bronze Base
Aged Brass Accents
Oyster Linen Shade

COLOR OPTIONS:

E2547	Eggplant Ceramic
G2547	Cactus Green Ceramic

Mary McDonald Directoire



2562X



2561X



2553



2554



2550B



2565

Mary McDonald Directoire

MARY MCDONALD DIRECTOIRE

2562X
Large Flush Mount



3 - 60W Max.
Bulb Type: A
Direct Wire
Silver Plate Finish
White Glass Accents

FINISH/SHADE OPTION:
2552 Antique Brass w/ Black Glass Accents



MARY MCDONALD DIRECTOIRE

2553
Small Flush Mount



2 - 60W Max.
Bulb Type: A
Direct Wire
Antique Brass Finish
Black Glass Accents

FINISH/SHADE OPTION:
2563X Silver Plate w/ White Glass Accents

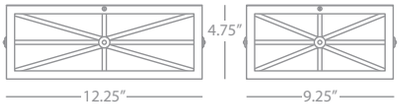

MARY MCDONALD DIRECTOIRE

2561X
Wall Sconce

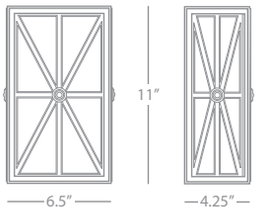

2 - 60W Max.
Bulb Type: B, Medium Base
Direct Wire Only
Silver Plate Finish
White Glass Accents

FINISH/SHADE OPTION:
2551 Antique Brass w/ Black Glass Accents

MARY MCDONALD DIRECTOIRE

2565
Swing Arm Sconce

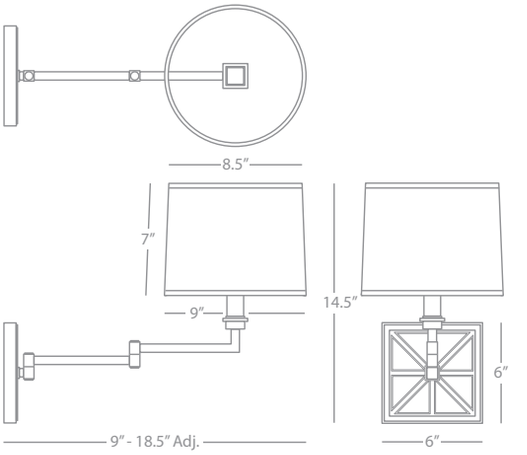

1 - 60W Max.
Bulb Type: B, Candelabra
Switch: On-Off Line Switch
24" Cord Cover/Direct Wire
Silver Plate Finish
Gray Glass Accents
Translucent White Mont Blanc Parchment Shade

FINISH/SHADE OPTIONS:
2555 Antique Brass w/ Black Glass Accents
Mont Blanc Parchment
2555B Antique Brass w/ Black Glass Accents
Black Painted Opaque Parchment

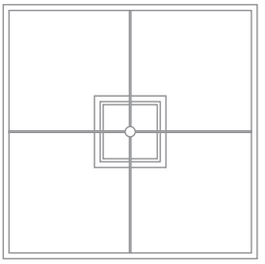

MARY MCDONALD DIRECTOIRE

2550B
Table Lamp

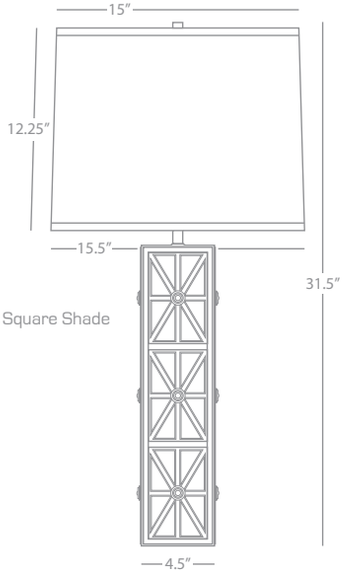

1 - 150W Max.
Bulb Type: A
Switch: 3-Way
Antique Brass Finish w/ Black Glass Accents
Black Painted Opaque Parchment Square Shade

SHADE OPTION:
2550 Mont Blanc Parchment

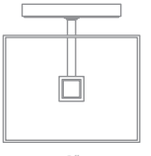

MARY MCDONALD DIRECTOIRE

2554
Wall Sconce

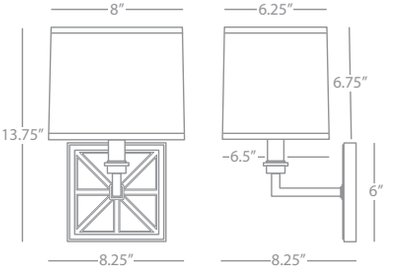

1 - 60W Max.
Bulb Type: B, Candelabra
Switch: On-Off Line Switch
24" Cord Cover/Direct Wire
Antique Brass Finish
Black Glass Accents
Rectangular Mont Blanc Parchment Shade

FINISH/SHADE OPTIONS:
2554B Antique Brass w/ Black Glass Accents
Black Painted Opaque Parchment
2654 Silver Plate w/ Gray Glass Accents
White Mont Blanc Parchment

Mary McDonald Spence



2573



2572



2571



2570

Mary McDonald Spence

MARY MCDONALD SPENCE

2573

Swing Arm Sconce

1 - 100W Max.
Bulb Type: A
Switch: Hi-Lo Dimming
24" Cord Cover/Direct Wire
Ecru Faux Ostrich Leather w/
Silver Plate Accents
White Mont Blanc Parchment Shade

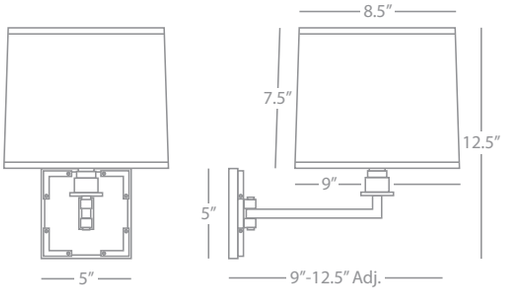

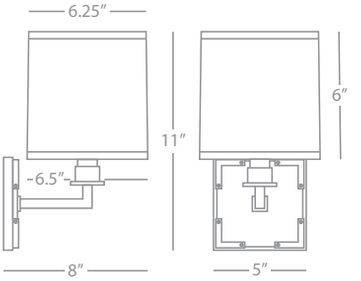

MARY MCDONALD SPENCE

2572

Wall Sconce

1 - 60W Max.
Bulb Type: B, Candelabra
Switch: On-Off Line Switch
24" Cord Cover/Direct Wire
Ecru Faux Ostrich Leather w/
Silver Plate Accents
White Mont Blanc Parchment Shade

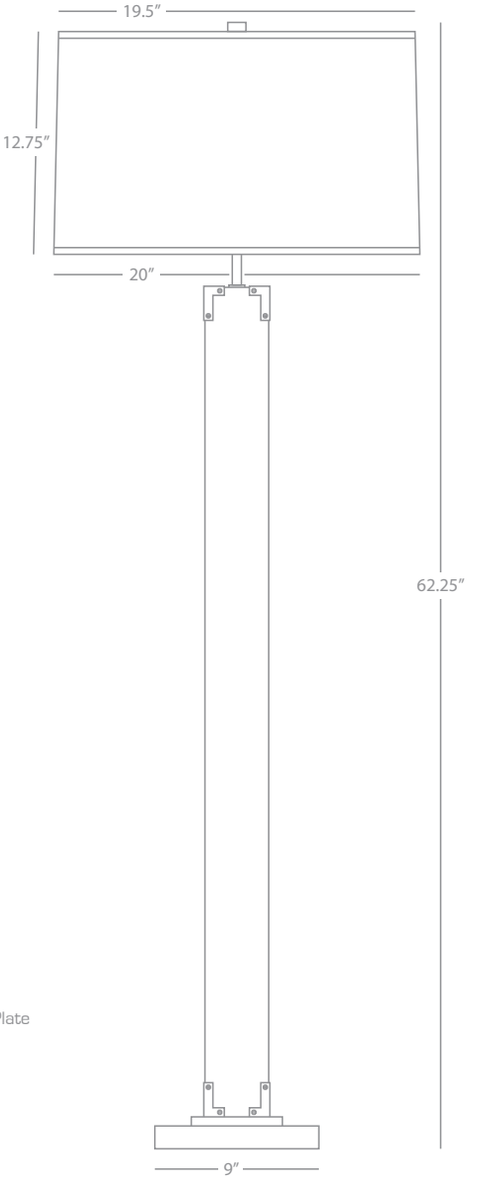

MARY MCDONALD SPENCE

2571

Floor Lamp

1 - 150W Max.
Bulb Type: A
Switch: 3-Way
Ecru Faux Ostrich Leather w/ Silver Plate
Accents & Crystal Base
White Mont Blanc Parchment Shade

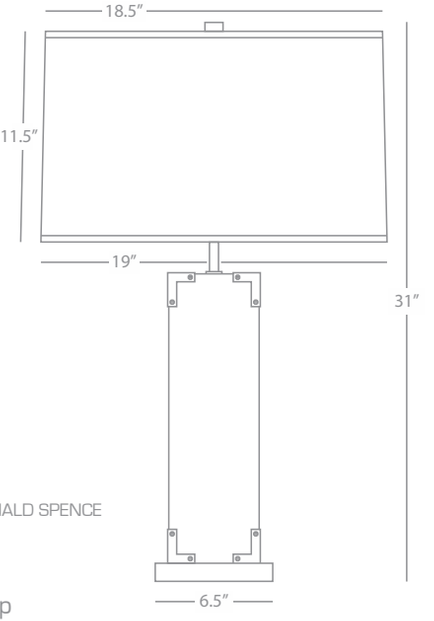

MARY MCDONALD SPENCE

2570

Table Lamp

1 - 150W Max.
Bulb Type: A
Switch: 3-Way
Ecru Faux Ostrich Leather w/
Silver Plate Accents & Crystal Base
White Mont Blanc Parchment Shade

Mary McDonald Baudelaire



S2596



S2585



2595



2586

Mary McDonald Baudelaire

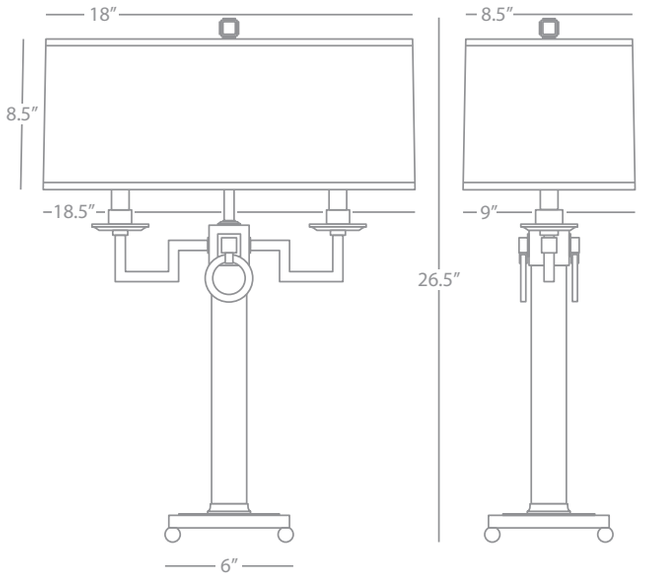

MARY MCDONALD BAUDELAIRE

2595

Table Lamp

2 - 60W Max.
Bulb Type: B, Candelabra
Switch: Hi-Lo Line Switch
Antique Brass Finish
Rectangular Ivory Silk Box Pleat Shade
w/ Off-White Silk Lining

FINISH/SHADE OPTIONS:

2585 Antique Brass
Ivory Silk Shade w/
Off-White Silk Lining

S2585 Polished Nickel
White Silk Shade w/
White Silk Lining

S2595 Polished Nickel
White Silk Box Pleat Shade
w/ White Silk Lining

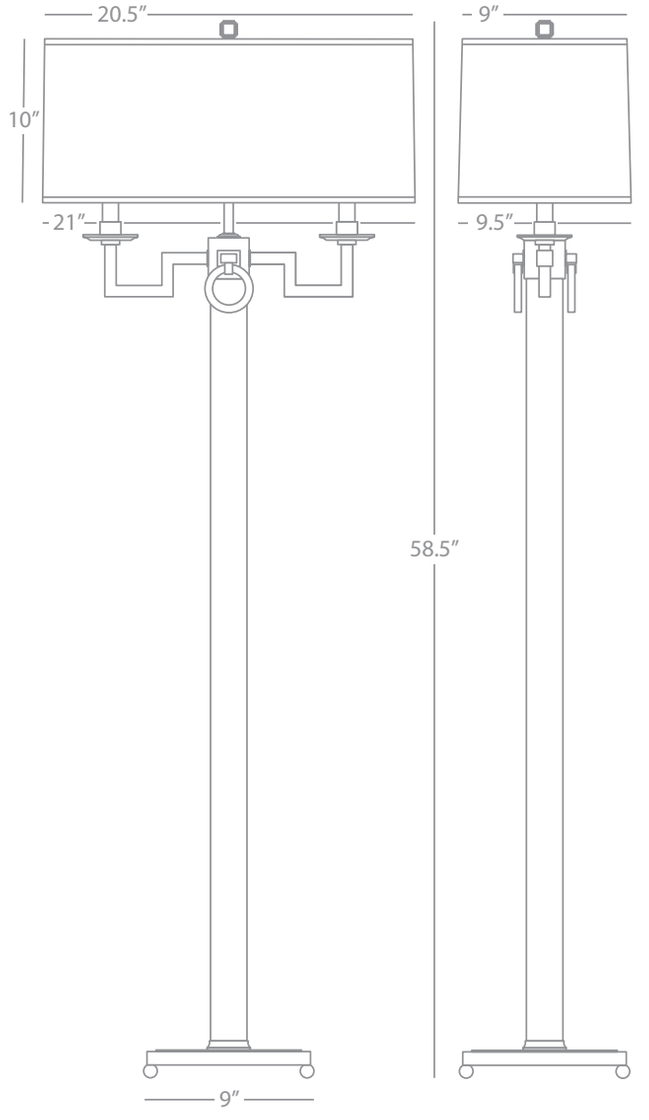

MARY MCDONALD BAUDELAIRE

2586

Floor Lamp

2 - 100W Max.
Bulb Type: A
Switch: On-Off Foot Switch
Antique Brass Finish
Rectangular Ivory Silk Shade
w/ Off-White Silk Lining

FINISH/SHADE OPTIONS:

2596 Antique Brass
Ivory Silk Box Pleat Shade
w/ Off-White Silk Lining

S2586 Polished Nickel
White Silk Shade w/
White Silk Lining

S2596 Polished Nickel
White Silk Box Pleat Shade
w/ White Silk Lining

Mary McDonald Santorini



2591



2590



2592



2593

Mary McDonald Santorini

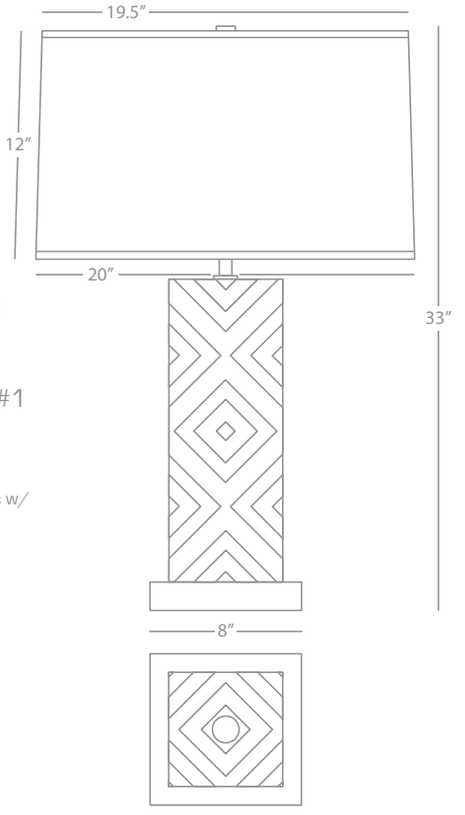

MARY MCDONALD SANTORINI

2591

Table Lamp - Pattern #1

1 - 150W Max.
Bulb Type: A
Switch: Hi-Lo Dimming
Blue and White Glazed Ceramic w/
Satin Brass Finished Accents
Lucite Base
Translucent White Mont Blanc
Parchment Shade

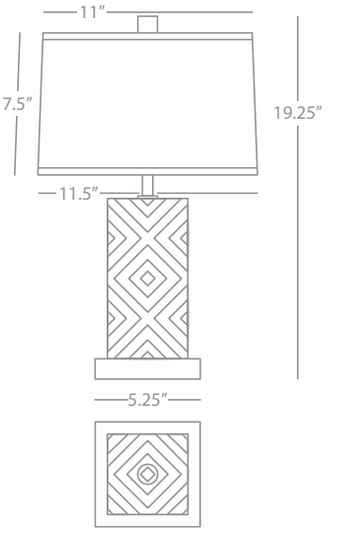

MARY MCDONALD SANTORINI

2590

Accent Lamp - Pattern #1

1 - 60W Max.
Bulb Type: G16.5 Candelabra
Switch: Hi-Lo Line Switch
Blue and White Glazed Ceramic w/
Satin Brass Finished Accents
Lucite Base
Translucent White Mont Blanc Parchment
Shade w/ Self-Fabric Top Diffuser

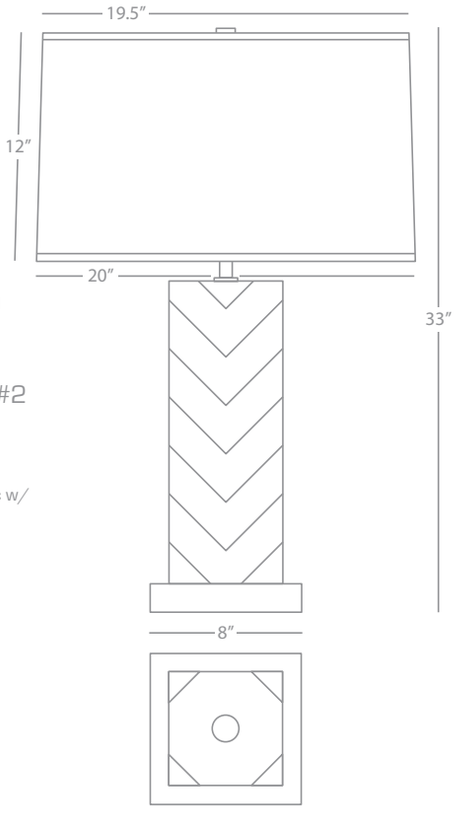

MARY MCDONALD SANTORINI

2593

Table Lamp - Pattern #2

1 - 150W Max.
Bulb Type: A
Switch: Hi-Lo Dimming
Blue and White Glazed Ceramic w/
Satin Brass Finished Accents
Lucite Base
Translucent White Mont Blanc
Parchment Shade

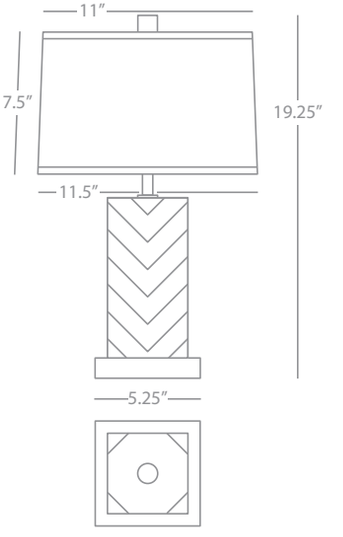

MARY MCDONALD SANTORINI

2592

Accent Lamp - Pattern #2

1 - 60W Max.
Bulb Type: G16.5 Candelabra
Switch: Hi-Lo Line Switch
Blue and White Glazed Ceramic w/
Satin Brass Finished Accents
Lucite Base
Translucent White Mont Blanc Parchment
Shade w/ Self-Fabric Top Diffuser



2607



2609X



2606X

Wilton

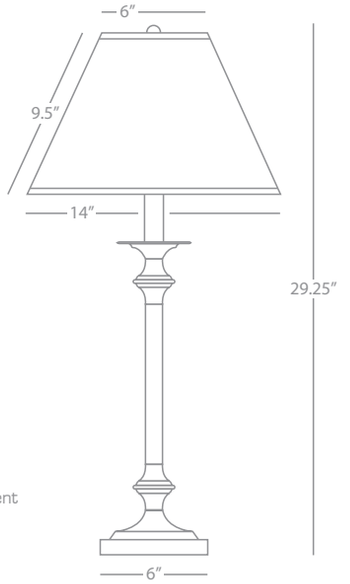

WILTON

2609X

Table lamp

1 - 150W Max.
Bulb Type: A
Switch: 3-Way
Antique Rust Finish
Golden Saki Fabric Shade

SHADE OPTION:
2609CLP Cloud Parchment

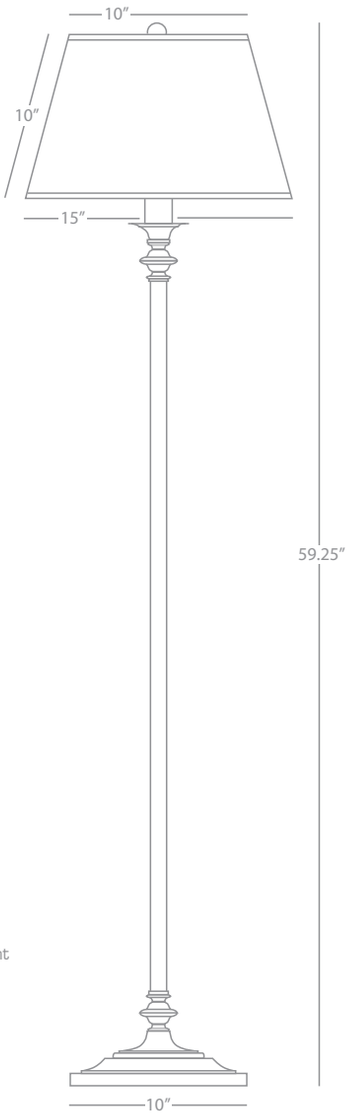

WILTON

2606X

Club Floor Lamp

1 - 150W Max.
Bulb Type: A
Switch: 3-Way
Antique Rust Finish
Golden Saki Fabric Shade

SHADE OPTION:
2606 Cloud Parchment

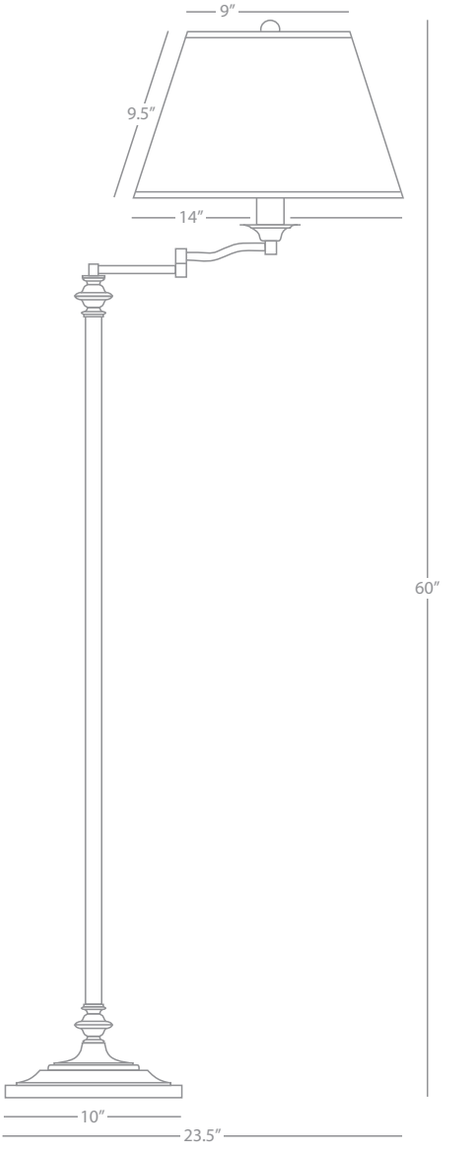

WILTON

2607

Swing Arm Floor Lamp

1 - 150W Max.
Bulb Type: A
Switch: 3-Way
Antique Rust Finish
Cloud Parchment Shade

SHADE OPTION:
2607X Golden Saki Fabric

Mary McDonald Pythagoras



S2671



2671



2670



S2672

Mary McDonald Pythagoras

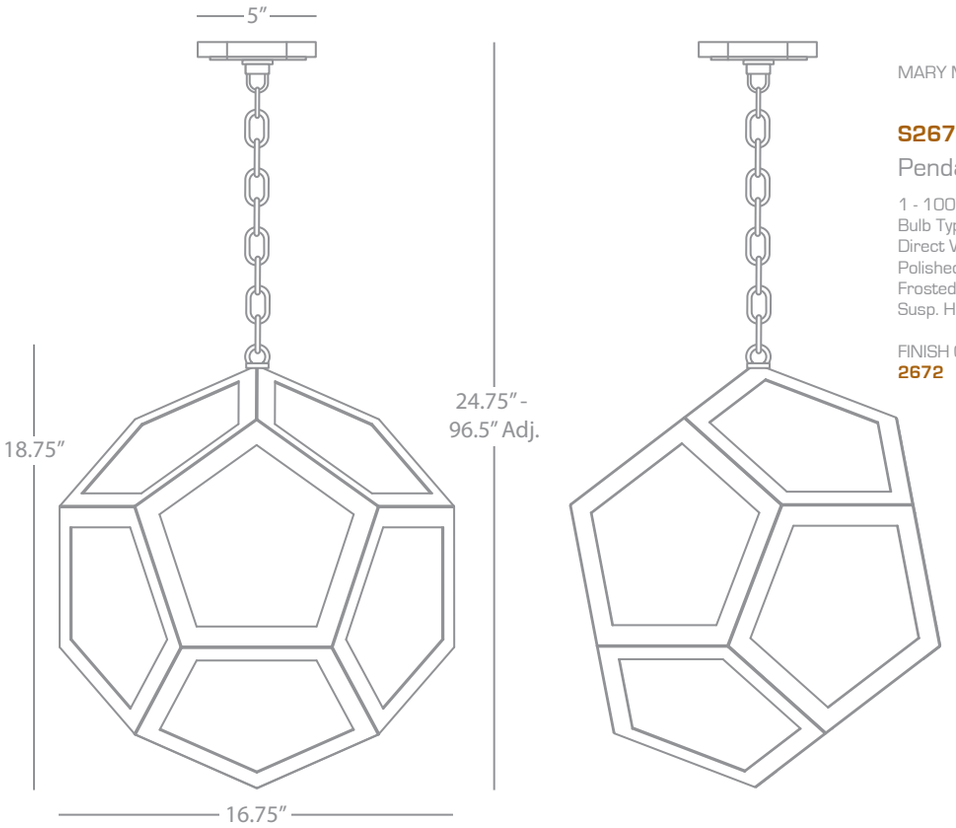

MARY MCDONALD PYTHAGORAS

S2672

Pendant

1 - 100W Max.
Bulb Type: A
Direct Wire
Polished Nickel Finish
Frosted Glass Shade Panels
Susp. Hardware: 6 Ft. Chain

FINISH OPTION:
2672 Matte Brass

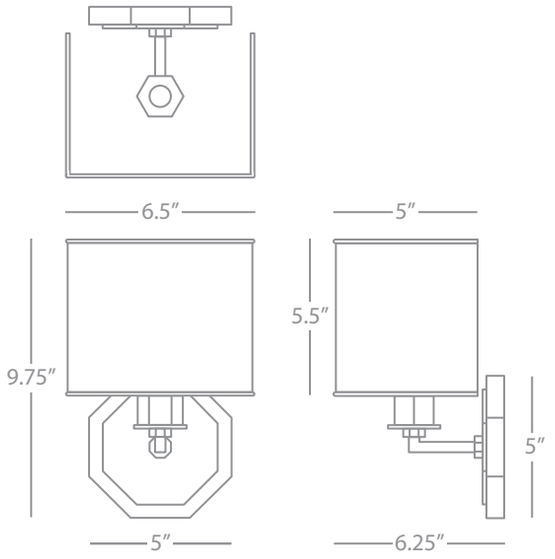

MARY MCDONALD PYTHAGORAS

2671

Wall Sconce

1 - 60W Max.
Bulb Type: B, Candelabra
24" Cord Cover/Direct Wire
Matte Brass Finish
Rectangular Metal Shade

FINISH OPTION:
S2671 Polished Nickel

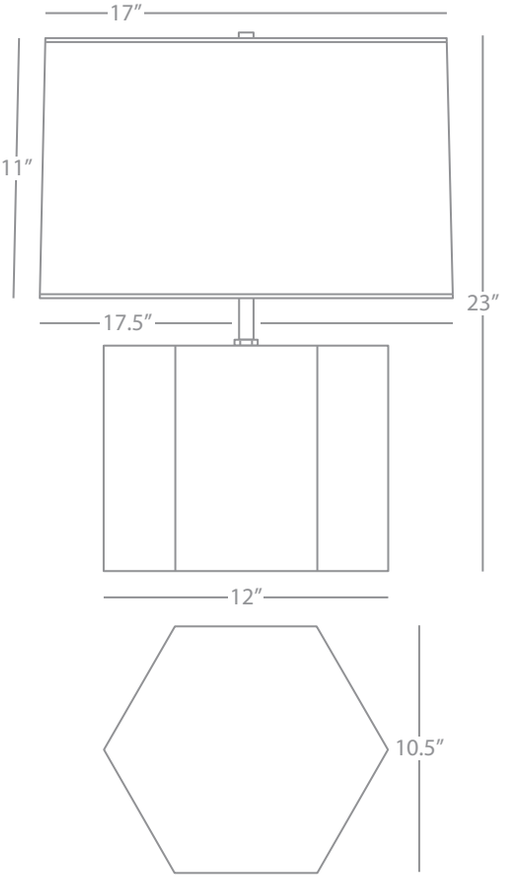

MARY MCDONALD PYTHAGORAS

2670

Table Lamp

1 - 150W Max.
Bulb Type: A
Switch: Hi-Lo Dimming
Matte Brass Finish
Matching Metal Shade

FINISH OPTION:
S2670 Polished Nickel



2703

Binary

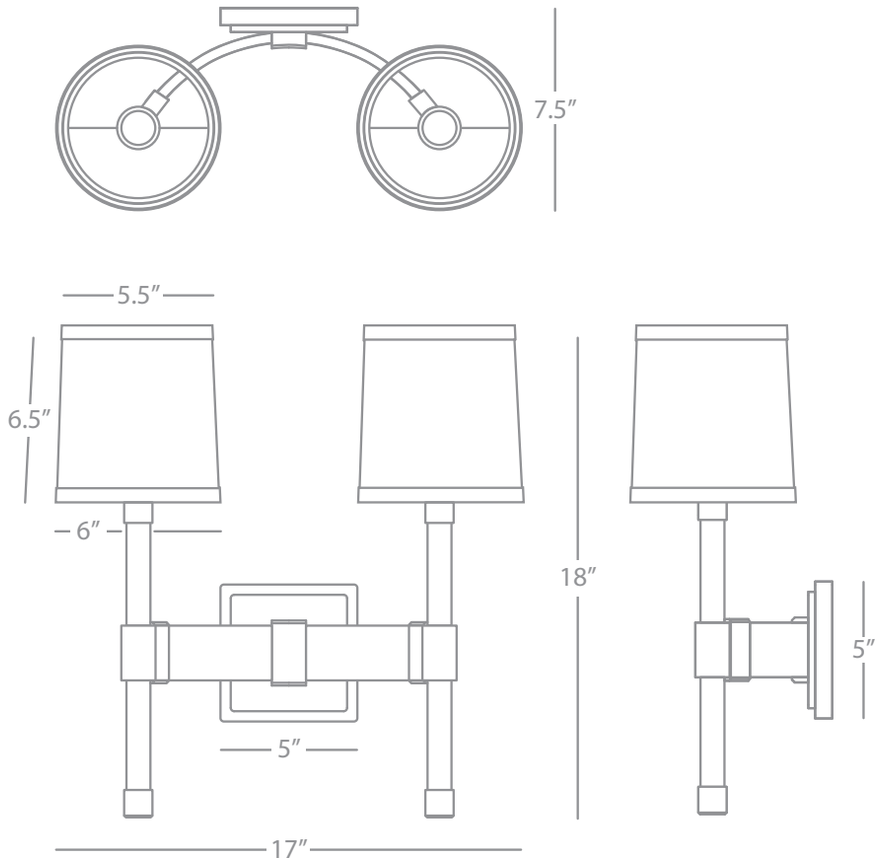

BINARY

2703

Double Sconce

2 - 60W Max.
Bulb Type: B, Candelabra
Direct Wire Only
Dark Natural Brass Finish w/
Ebonized Wood Accents
Eggshell Linen Shades



2742



S2743



S2741



2740

Edwin

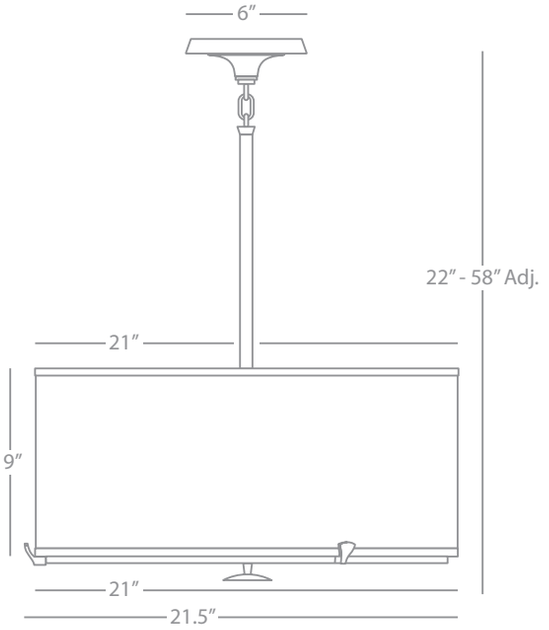

EDWIN

2742

Pendant

2 - 100W Max.
Bulb Type: A
Direct Wire
Aged Brass Finish
Walnut Finished Wood Canopy
Cream Brussels Linen Shade
18.5" Dia. White Acrylic Diffuser
Susp. Hardware: 3 pcs. 5/8" x 12" &
1 pc. 5/8" x 6" Extensions

FINISH/SHADE OPTION:
S2742 Polished Nickel/Dark Walnut Wood
Bisque Linen

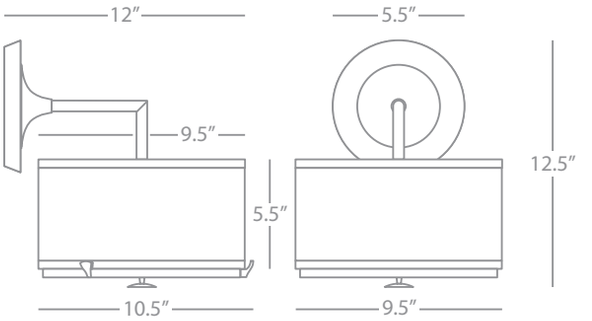

EDWIN

S2743

Wall Sconce

1 - 60W Max.
Bulb Type: G16, Candelabra Base
Direct Wire Only
Polished Nickel Finish w/
Dark Walnut Wood Accents
Bisque Linen Shade w/
Self-Fabric Top Diffuser
8" Dia. Acrylic Bottom Diffuser

FINISH/SHADE OPTION:
2743 Aged Brass/Walnut Wood
Cream Brussels Linen

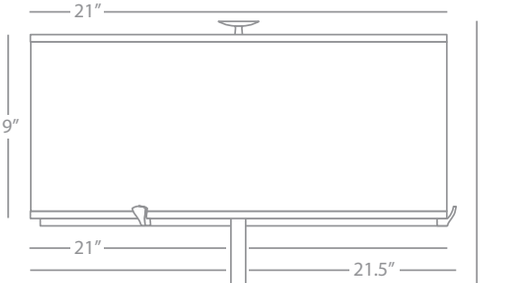

EDWIN

S2741

Floor Lamp

2 - 100W Max.
Bulb Type: A
Switch: On-Off Foot Switch
Polished Nickel Finish
Dark Walnut Wood Finished Base
Bisque Linen Shade w/
Self-Fabric Top Diffuser

FINISH/SHADE OPTION:
2741 Aged Brass/Walnut Wood
Cream Brussels Linen

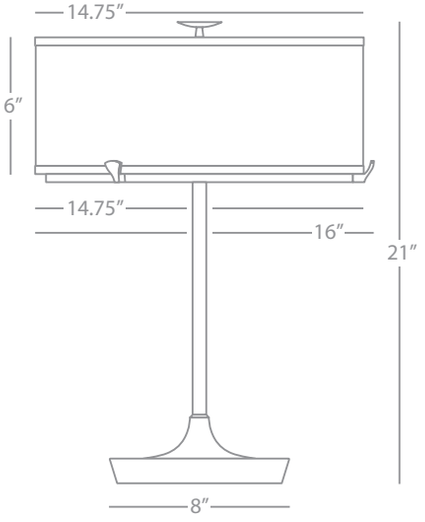

EDWIN

2740

Table Lamp

2 - 60W Max.
Bulb Type: A
Switch: Hi-Lo Line Switch
Aged Brass Finish
Walnut Wood Finished Base
Cream Brussels Linen Shade w/
Self-Fabric Top Diffuser

FINISH/SHADE OPTION:
S2740 Polished Nickel/Dark Walnut
Bisque Linen



2811



2812



2810

Trenton

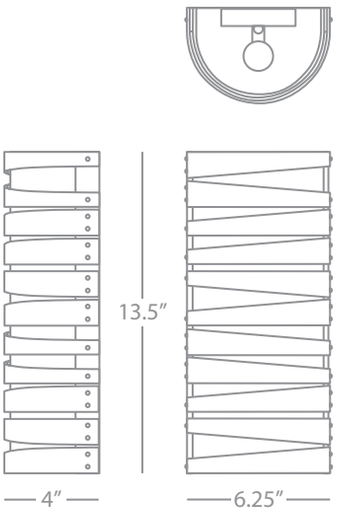

TRENTON

2812

Half Round Sconce

2 - 60W Max.
Bulb Type: B, Candelabra
Direct Wire Only
Wrought Iron Finish
Frosted White Cased Glass Shade

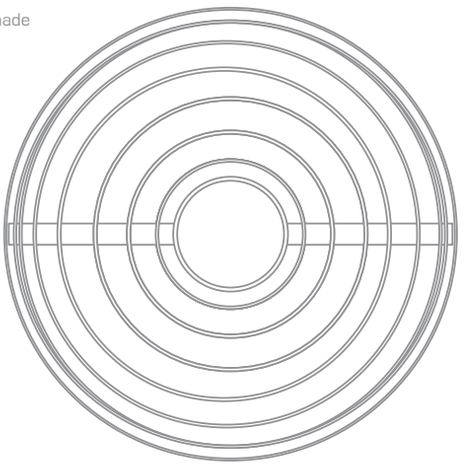

TRENTON

2811

Pendant

1 - 150W Max.
Bulb Type: A
Direct Wire
Wrought Iron Finish
White Frosted Glass Shade
Susp. Hardware: 3 pcs. 5/8" x 12" &
1 pc. 5/8" x 6" Extensions

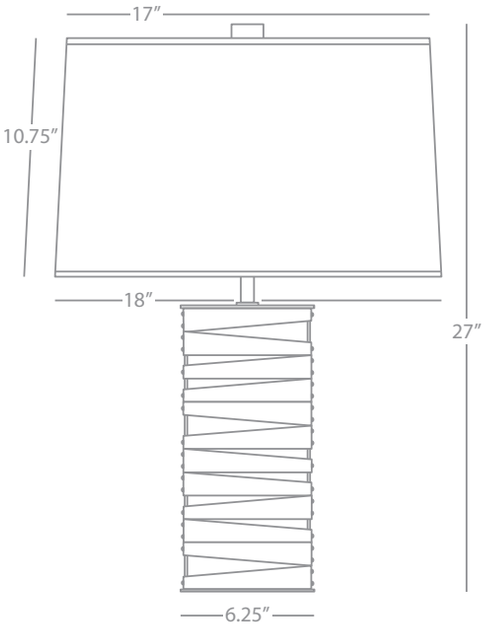

TRENTON

2810

Table Lamp

1 - 150W Max.
Bulb Type: A
Switch: Hi-Lo Dimming
Wrought Iron Finish
Raw Linen Shade



2824



D2823

Z2821



2820



Z2822

Sofia

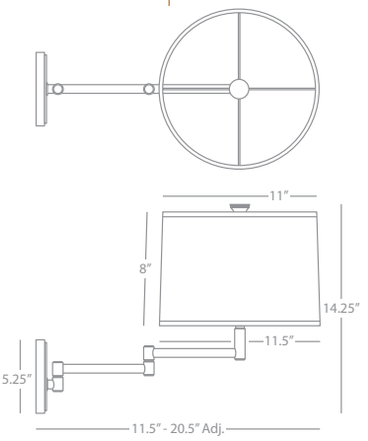

SOFIA

2824

Swing Arm Sconce

1 - 100W Max.
Bulb Type: A
Switch: Hi-Lo Dimming
24″ Cord Cover/Direct Wire
Antique Brass Finish
Open Weave White Linen Shade

FINISH/SHADE OPTIONS:

D2824 Dark Antique Nickel
Open Weave White Linen

Z2824 Deep Patina Bronze
Open Weave Heather Linen

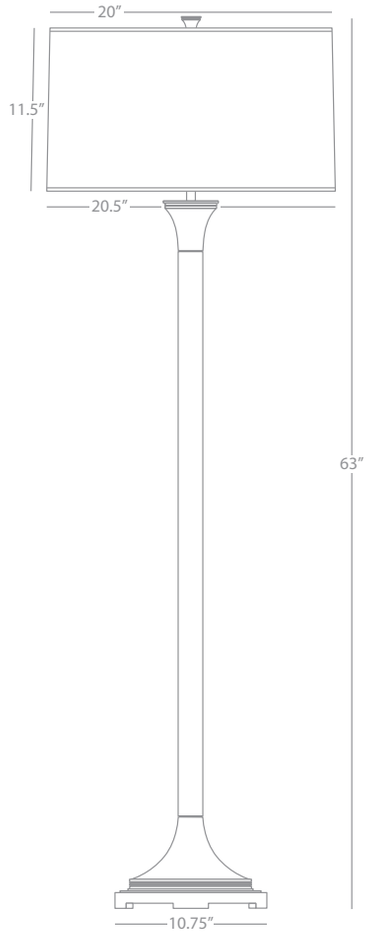

SOFIA

2820

Table Lamp

1 - 150W Max.
Bulb Type: A
Switch: Hi-Lo Dimming
Antique Brass Finish
Open Weave White Linen Shade

FINISH/SHADE OPTIONS:

D2820 Dark Antique Nickel
Open Weave White Linen

Z2820 Deep Patina Bronze
Open Weave Heather Linen

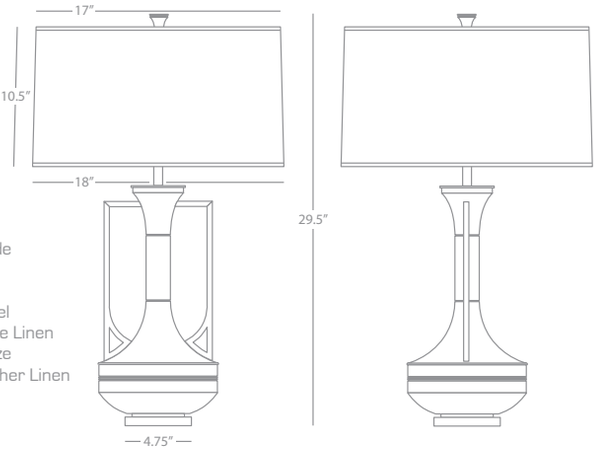

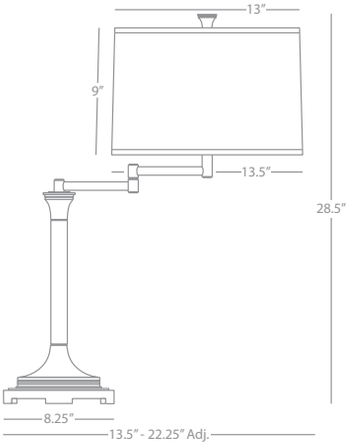

SOFIA

Z2821

Swing Arm Table Lamp

1 - 150W Max.
Bulb Type: A
Switch: Hi-Lo Dimming
Deep Patina Bronze Finish
Open Weave Heather Linen Shade

FINISH/SHADE OPTIONS:

2821 Antique Brass
Open Weave White Linen

D2821 Dark Antique Nickel
Open Weave White Linen

SOFIA

Z2822

Floor Lamp

2 - 150W Max.
Bulb Type: A
Switch: Hi-Lo Pull Chains
Deep Patina Bronze Finish
Open Weave Heather Linen Shade

FINISH/SHADE OPTIONS:

2822 Antique Brass
Open Weave White Linen

D2822 Dark Antique Nickel
Open Weave White Linen

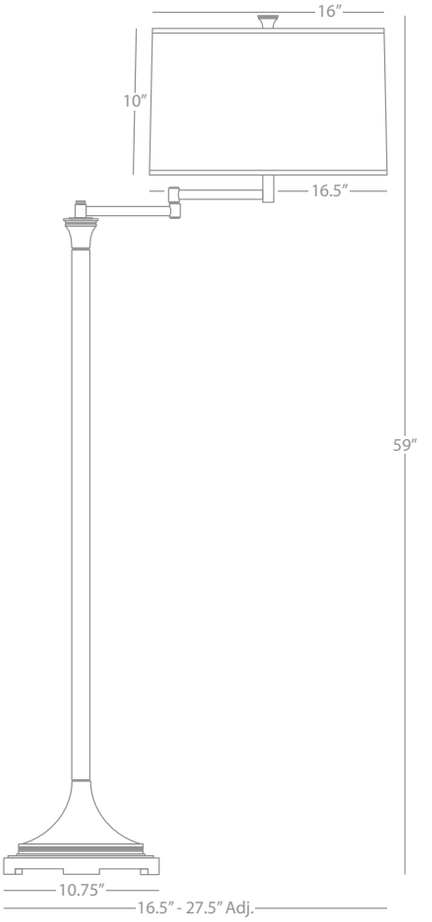

SOFIA

D2823

Swing Arm Floor Lamp

1 - 150W Max.
Bulb Type: A
Switch: Hi-Lo Dimming
Dark Antique Nickel Finish
Open Weave White Linen Shade

FINISH/SHADE OPTIONS:

2823 Antique Brass
Open Weave White Linen

Z2823 Deep Patina Bronze
Open Weave Heather Linen



Z2851

Z2850



S2851

S2850

Max

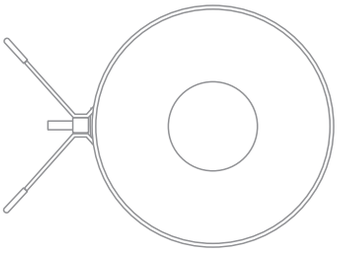

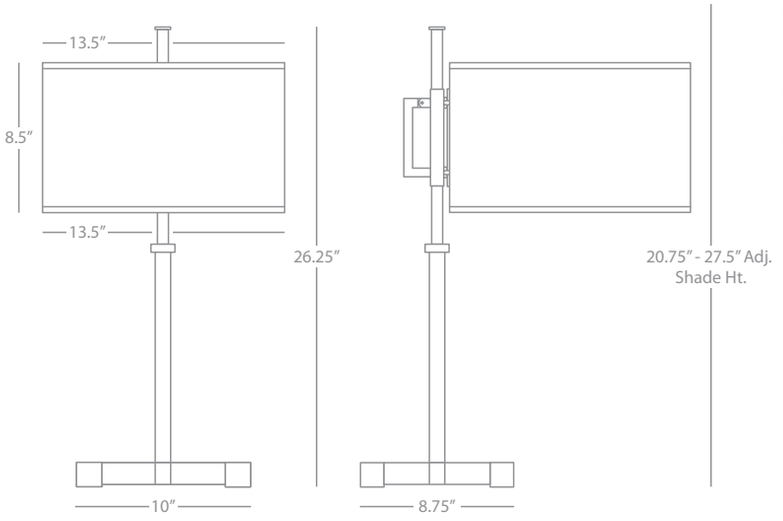

MAX

S2850

Adjustable Shade Table Lamp

1 - 150W Max.
Bulb Type: A
Switch: Hi-Lo Dimming
Polished Nickel Finish
Ascot White Fabric Shade w/
Self-Fabric Top Diffuser

FINISH/SHADE OPTION:
Z2850 Deep Patina Bronze
Fondine Fabric

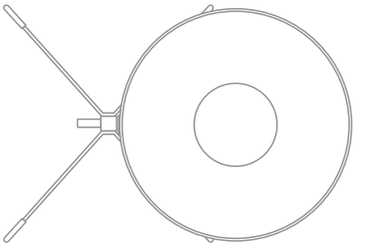

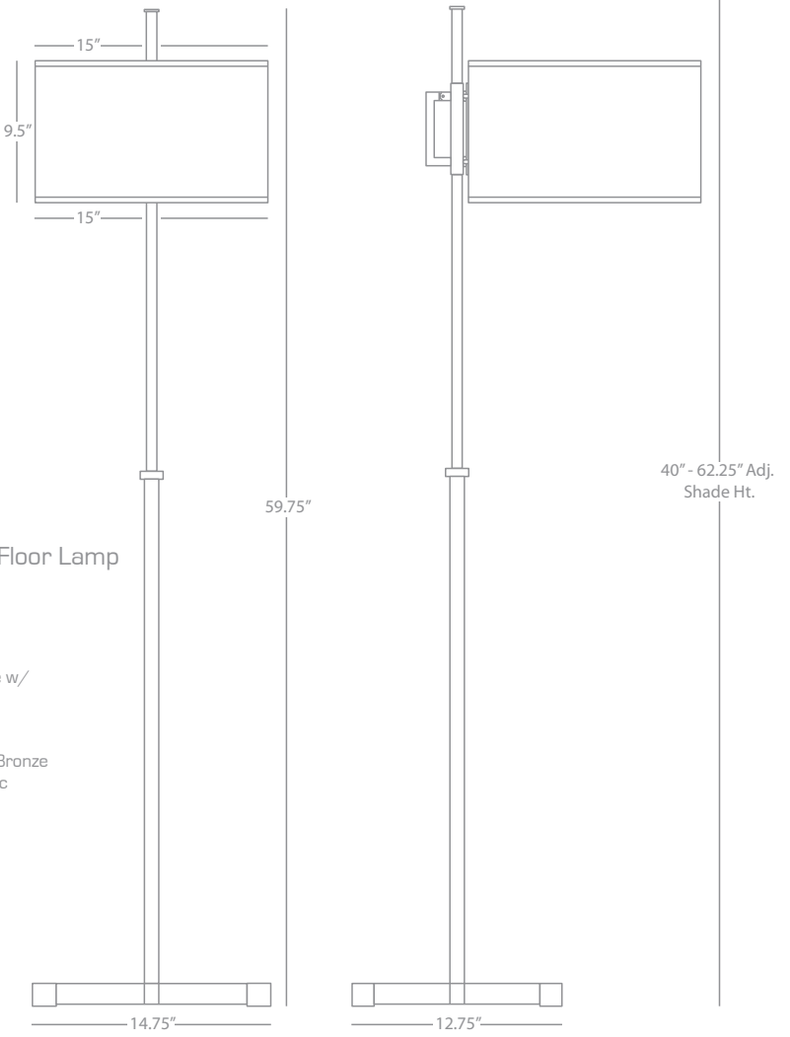

MAX

S2851

Adjustable Shade Floor Lamp

1 - 150W Max.
Bulb Type: A
Switch: Hi-Lo Dimming
Polished Nickel Finish
Ascot White Fabric Shade w/
Self-Fabric Top Diffuser

FINISH/SHADE OPTION:
Z2851 Deep Patina Bronze
Fondine Fabric



S2856



Z2857



Z2855

Colonnade

COLONNADE

S2856

Tray Table Floor Lamp

1 - 150W Max.
Bulb Type: A
Switch: Hi-Lo Dimming
Polished Nickel Finish w/
Carrara Marble Base
Oval Tempered Glass Tray
Oval Open Weave White Linen Shade

FINISH/SHADE OPTION:
Z2856 Deep Patina Bronze w/
Travertine Stone Base
Open Weave Heather Linen

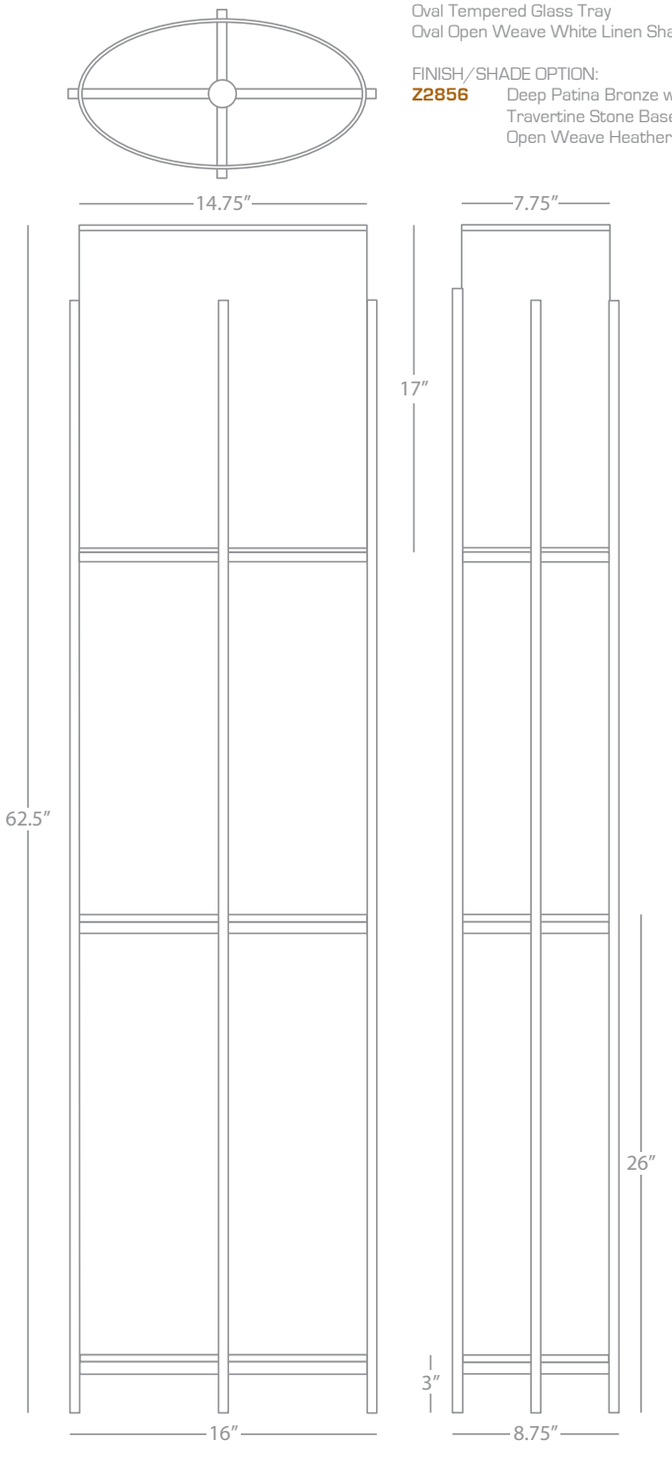

COLONNADE

Z2857

Wall Sconce

1 - 60W Max.
Bulb Type: B, Candelabra
Switch: On/Off Line Switch
24" Cord Cover/Direct Wire
Deep Patina Bronze Finish
Oval Open Weave Heather Linen Shade

FINISH/SHADE OPTION:
S2857 Polished Nickel
Open Weave White Linen

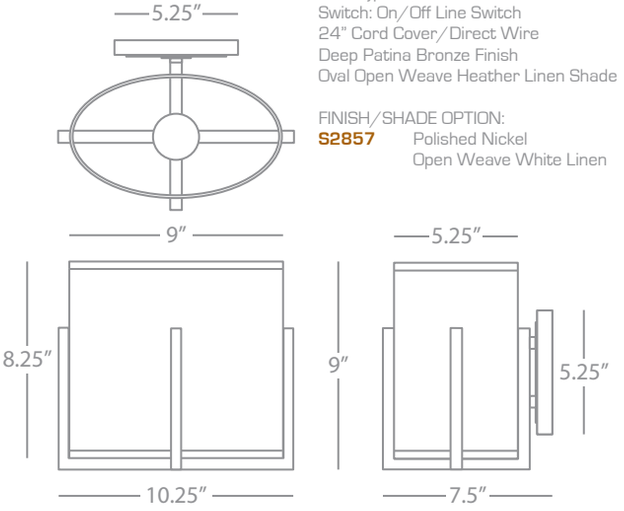

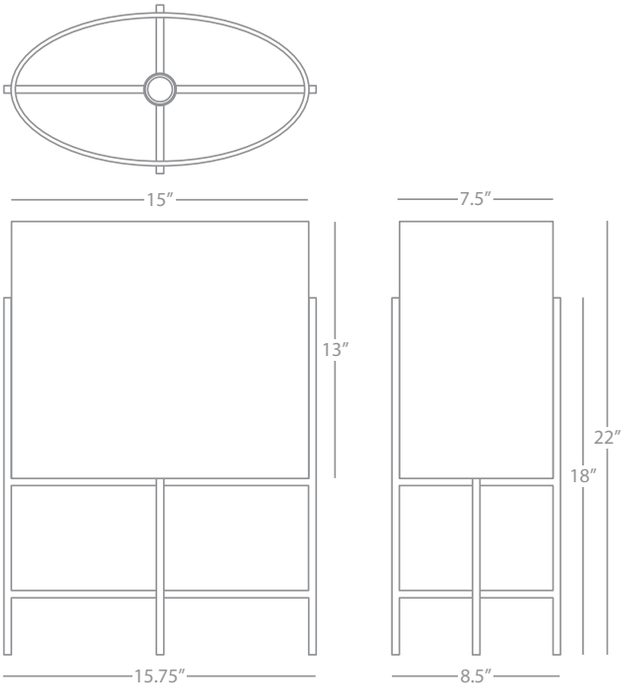

COLONNADE

Z2855

Table Lamp

1 - 100W Max.
Bulb Type: A
Switch: Hi-Lo Line Switch
Deep Patina Bronze Finish
Oval Open Weave Heather Linen Shade

FINISH/SHADE OPTION:
S2855 Polished Nickel
Open Weave White Linen



3307



3306

Goddess

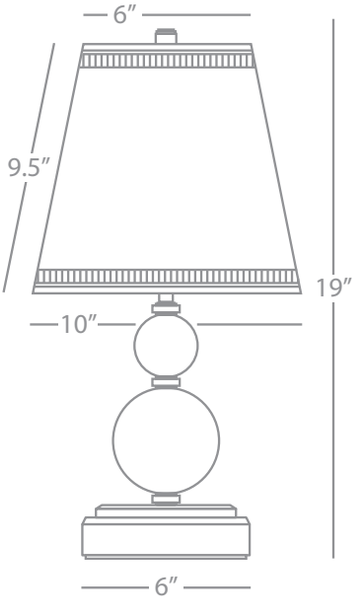

GODDESS

3306

Juno Accent Lamp

1 - 60W Max.
Bulb Type: B, Candelabra
Switch: Hi-Lo Dimming
Lead Crystal w/ Silver Plated Accents
White Mont Blanc Parchment Shade w/
Grosgrain Trim

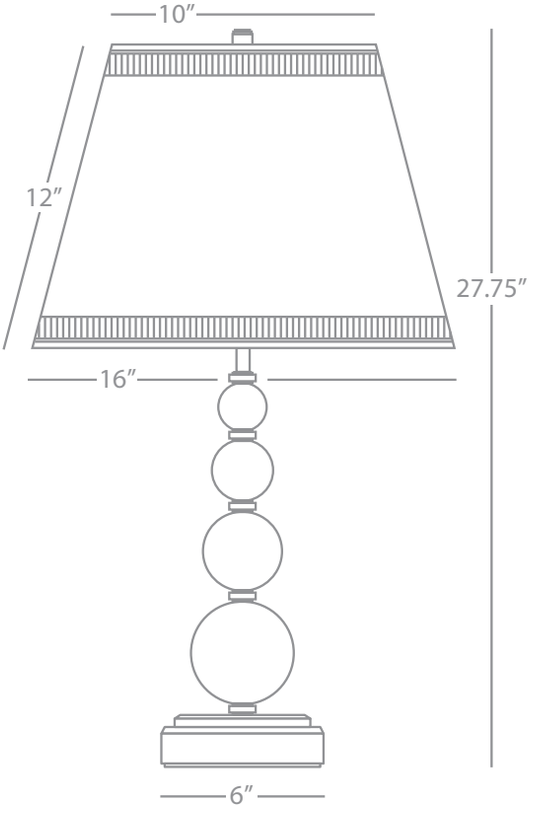

GODDESS

3307

Venus Table Lamp

1 - 150W Max.
Bulb Type: A
Switch: Full Range Dimmer
Lead Crystal w/ Silver Plated Accents
White Mont Blanc Parchment Shade w/
Grosgrain Trim



3316



3315



3317



3314

Muse

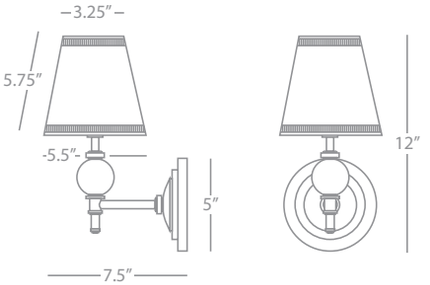

MUSE

3314
Calliope Wall Sconce

1 - 60W Max.
Bulb Type: B, Candelabra
Direct Wire Only
Lead Crystal w/ Silver Plated Accents
White Mont Blanc Parchment
Shade w/ Grosgrain Trim

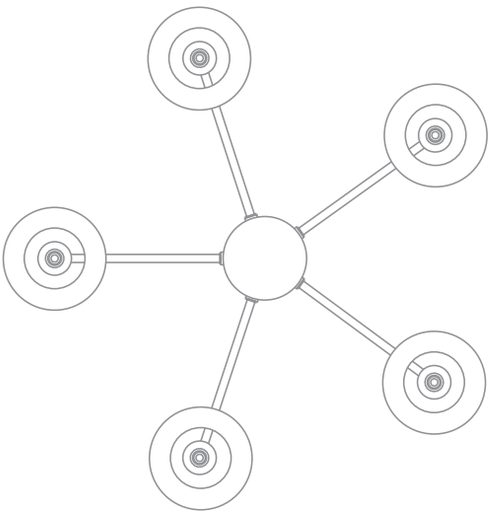

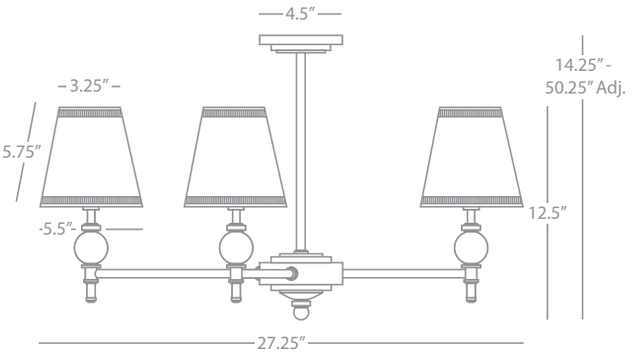

MUSE

3317
Thalia Chandelier

5 - 60W Max.
Bulb Type: B, Candelabra
Direct Wire Only
Lead Crystal w/ Silver Plated Accents
White Mont Blanc Parchment
Shade w/ Grosgrain Trim
Susp. Hardware: 3 pcs. 1/2" x 12" &
1 pc. 1/2" x 6" Extensions

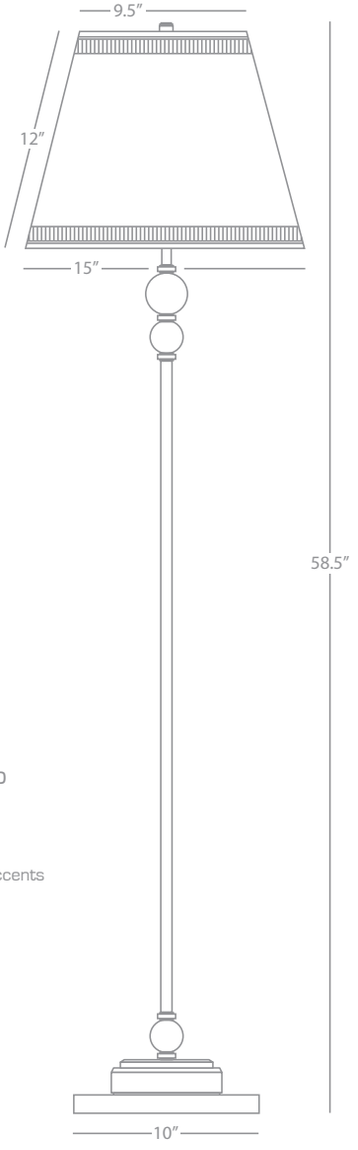

MUSE

3316
Erato Club Floor Lamp

1 - 150W Max.
Bulb Type: A
Switch: Full Range Dimmer
Lead Crystal w/ Silver Plate Accents
White Mont Blanc Parchment
Shade w/ Grosgrain Trim

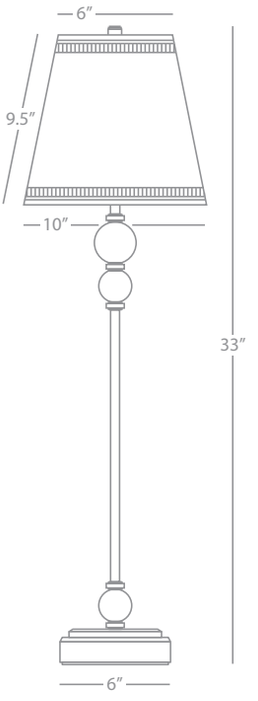

MUSE

3315
Urania Buffet Table Lamp

1 - 100W Max.
Bulb Type: A
Switch: Full Range Dimmer
Lead Crystal w/ Silver Plated Accents
White Mont Blanc Parchment
Shade w/ Grosgrain Trim



D3320

Andre



Z3318

Wells



D3319

Andre | Wells

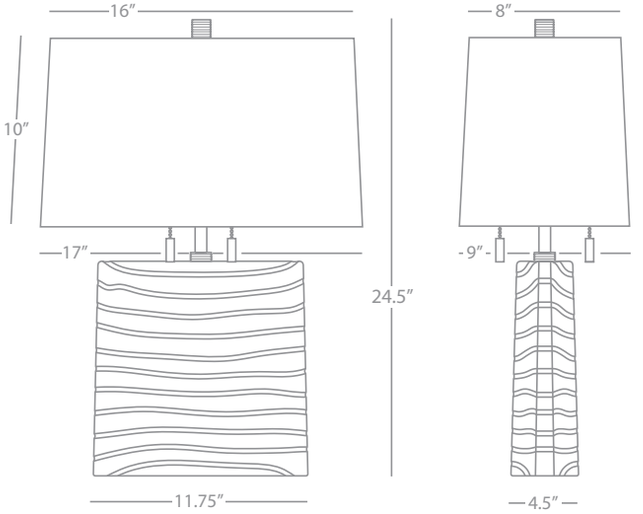

WELLS

D3319

Table Lamp

2 - 60W Max.
Bulb Type: A
Switch: On-Off Double Pull Chains
Clear Seeded Glass w/
Dark Antique Nickel Accents
Oval Off-White Linen Shade w/
Rolled Edge Hem

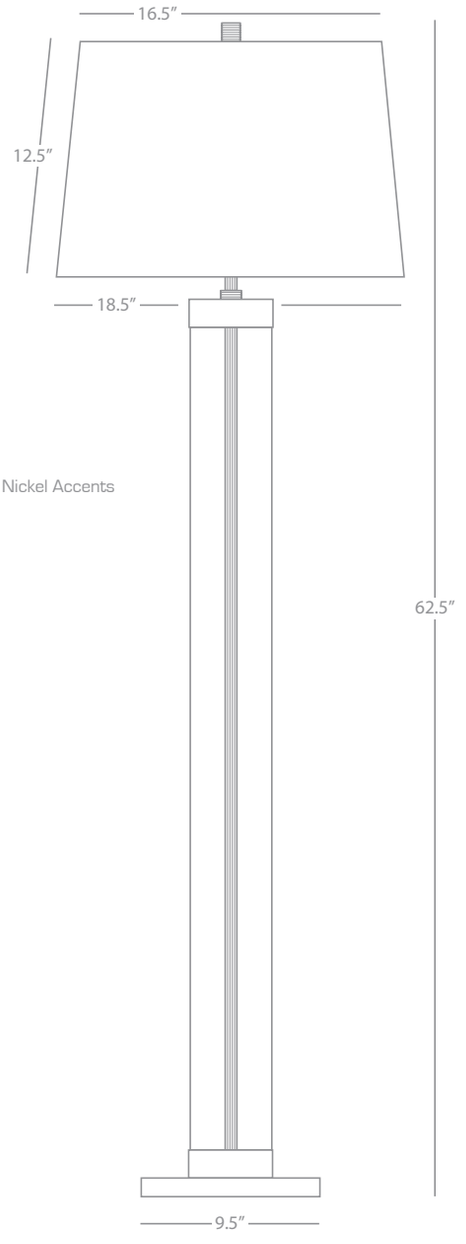

ANDRE

D3320

Floor Lamp

1 - 150W Max.
Bulb Type: A
Switch: Full Range Dimmer
Clear Glass Column w/Dark Antique Nickel Accents
Off-White Cotton Shade
w/ Rolled Edge Hem

FINISH OPTION:
Z3320 Deep Patina Bronze

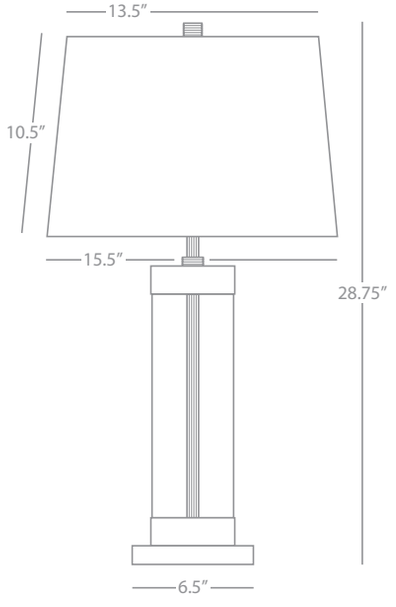

ANDRE

Z3318

Table Lamp

1 - 150W Max.
Bulb Type: A
Switch: Full Range Dimmer
Clear Glass Cylinder w/
Deep Patina Bronze Accents
Off-White Cotton Shade w/
Rolled Edge Hem

FINISH OPTION:
D3318 Dark Antique Nickel

Glass Harriet



W3323



M3323



3323



T3323



B3323

Glass Harriet

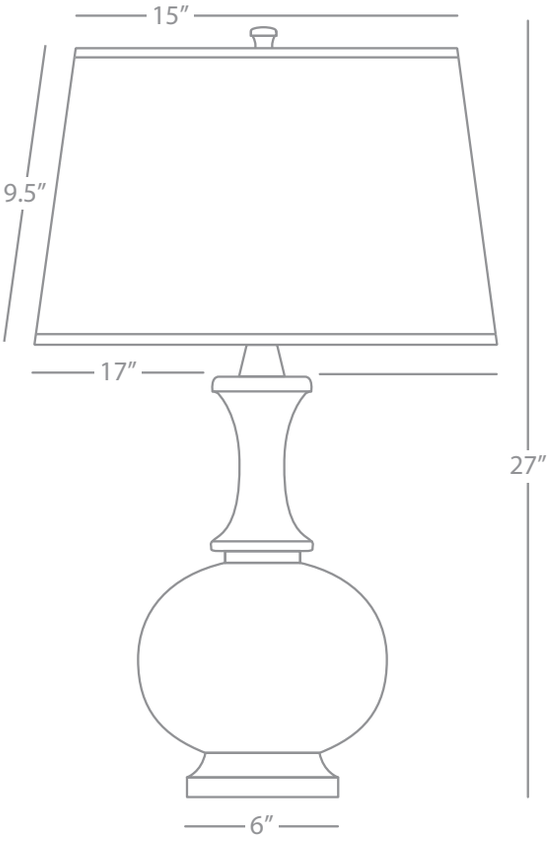

GLASS HARRIET

3323
Table Lamp

1 - 150W Max.
Bulb Type: A
Switch: Full Range Dimmer
Clear Glass w/ Polished Nickel Accents
Off-White Cotton Shade w/
Rolled Edge Hem

FINISH OPTIONS:

B3323	Smoky Blue Glass
M3323	Antique Mercury Glass
T3323	Smoky Brown Glass
W3323	White Glass



3329



3324W



3324B

Artemis

ARTEMIS

3329

Accent Lamp

1 - 60W Max.
Bulb Type: B11 Torpedo
Switch: Full Range Dimmer
Clear Lead Crystal w/ Silver Plate Accents
Rectangular Cafe Dupioni Silk Shade

SHADE OPTIONS:
3329B Black Dupioni Silk Shade
3329W Off-White Dupioni Silk Shade

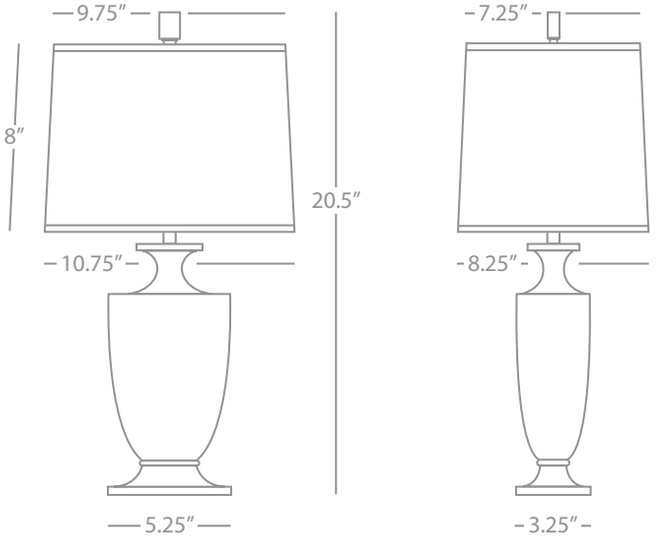

ARTEMIS

3324W

Table Lamp

1 - 150W Max.
Bulb Type: A
Switch: Full Range Dimmer
Clear Lead Crystal w/ Silver Plate Accents
Rectangular Off-White Dupioni Silk Shade

SHADE OPTIONS:
3324 Cafe Dupioni Silk Shade
3324B Black Dupioni Silk Shade

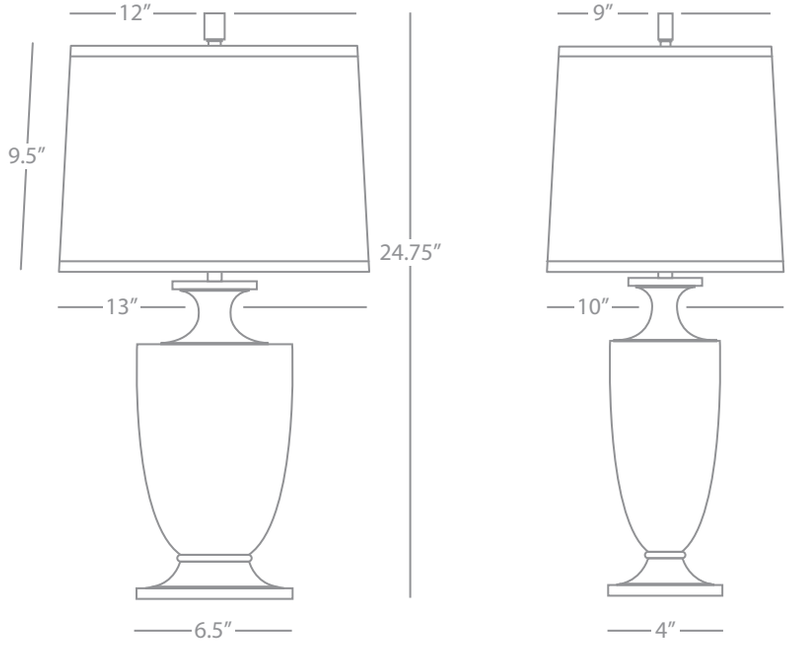



S3336



S3337

Cole

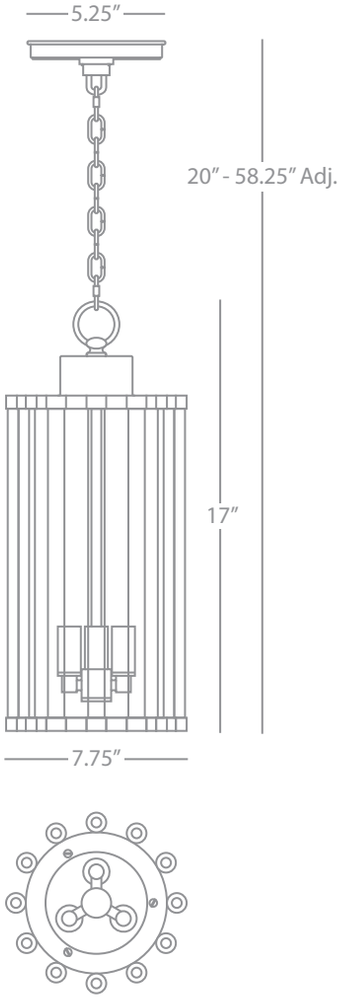

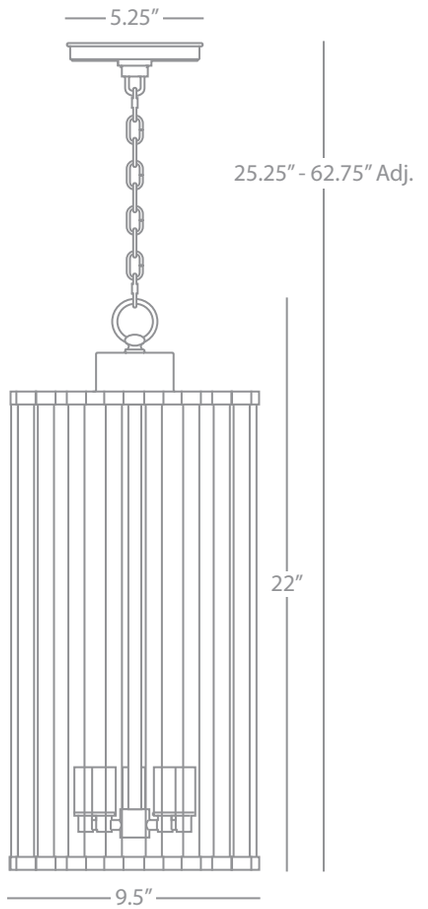

COLE

S3336

Small Pendant

3 - 60W Max.
Bulb Type: B, Candelabra
Direct Wire Only
Clear Glass Rods w/ Clear Inner Glass Shade
Polished Nickel Finished Accents
Susp. Hardware: 3 Ft. Chain

COLE

S3337

Large Pendant

5 - 60W Max.
Bulb Type: B, Candelabra
Direct Wire Only
Clear Glass Rods w/ Clear Inner Glass Shade
Polished Nickel Finished Accents
Susp. Hardware: 3 Ft. Chain



S3361



S3360



Z3338



3362

Blake

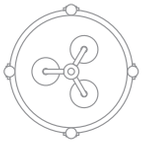

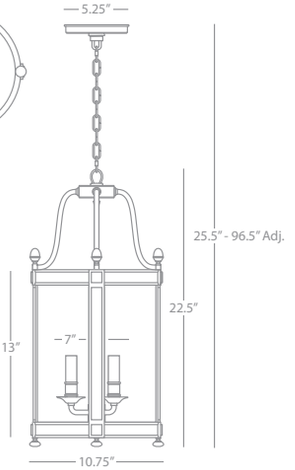

BLAKE

S3360

10" Dia. Entry Pendant

3 - 60W Max.
Bulb Type: B, Candelabra
Direct Wire Only
Polished Nickel Finish
4 Clear Glass Shade Panels
Susp. Hardware: 6 Ft. Chain

FINISH OPTIONS:
3360 Antique Brass
Z3360 Deep Patina Bronze

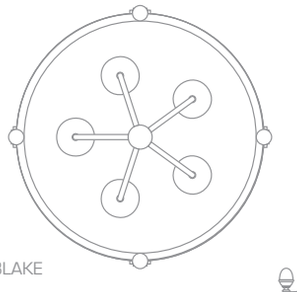

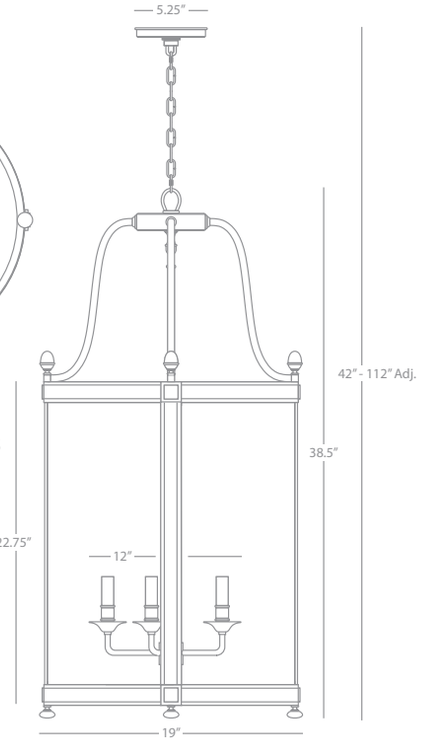

BLAKE

Z3338

18" Dia. Entry Pendant

5 - 60W Max.
Bulb Type: B, Candelabra
Direct Wire Only
Deep Patina Bronze Finish
4 Clear Glass Shade Panels
Susp. Hardware: 6 Ft. Chain

FINISH OPTIONS:
3338 Antique Brass
S3338 Polished Nickel

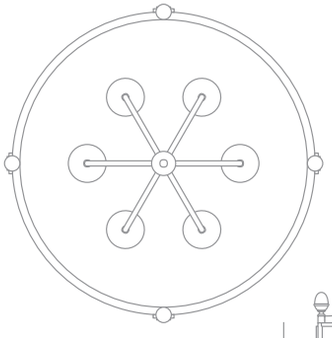

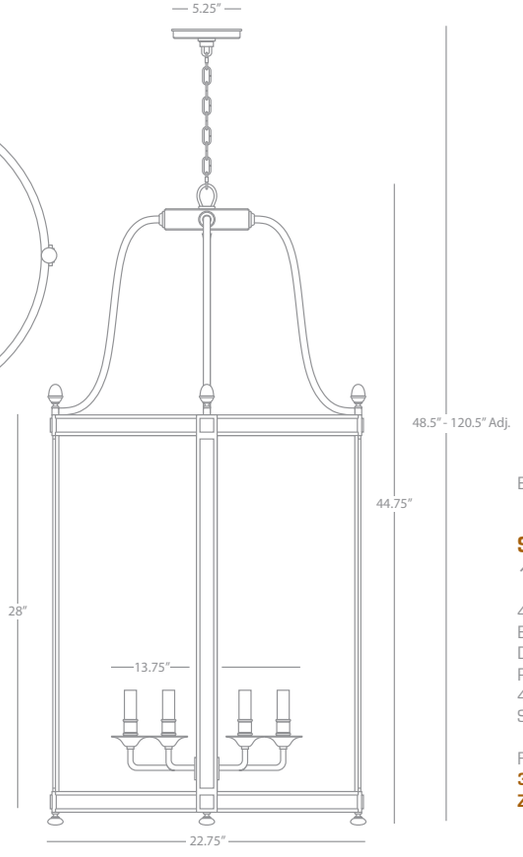

BLAKE

3362

22" Dia. Entry Pendant

6 - 60W Max.
Bulb Type: B, Candelabra
Direct Wire Only
Antique Brass Finish
4 Clear Glass Shade Panels
Susp. Hardware: 6 Ft. Chain

FINISH OPTIONS:
S3362 Polished Nickel
Z3362 Deep Patina Bronze

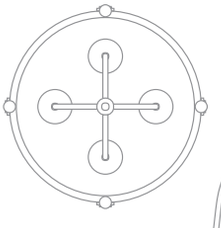

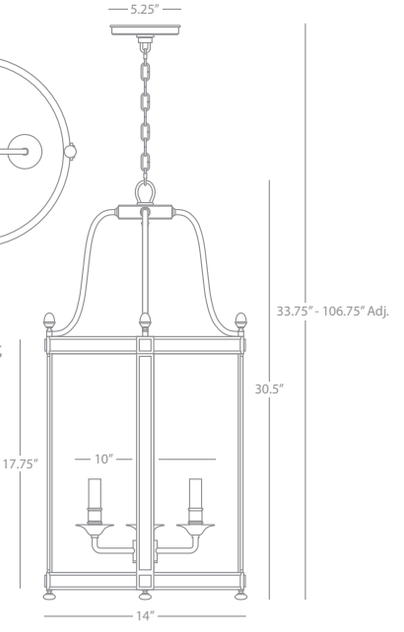

BLAKE

S3361

14" Dia. Entry Pendant

4 - 60W Max.
Bulb Type: B, Candelabra
Direct Wire Only
Polished Nickel Finish
4 Clear Glass Shade Panels
Susp. Hardware: 6 Ft. Chain

FINISH OPTIONS:
3361 Antique Brass
Z3361 Deep Patina Bronze



3364



Z3364



S3363



Z3363

Blake

BLAKE

3364
Half Round Sconce

2 - 60W Max.
Bulb Type: B, Candelabra
Direct Wire Only
Antique Brass Finish
Clear Glass Shade Panel

FINISH OPTIONS:
S3364 Polished Nickel
Z3364 Deep Patina Bronze

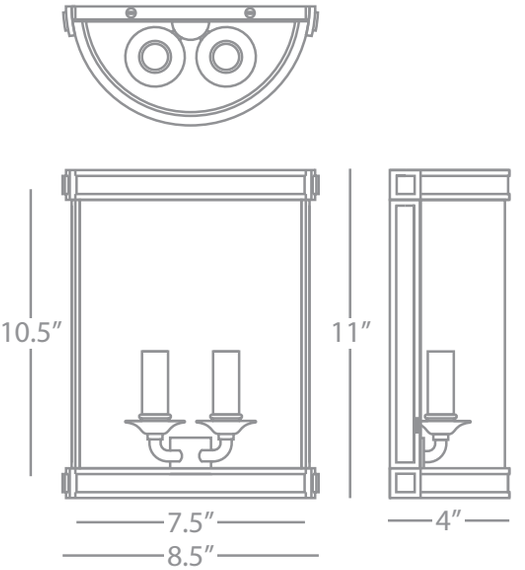

BLAKE

Z3363
Flush Mount

3 - 60W Max.
Bulb Type: B, Candelabra
Direct Wire Only
Deep Patina Bronze Finish
4 Clear Glass Shade Panels

FINISH OPTIONS:
3363 Antique Brass
S3363 Polished Nickel

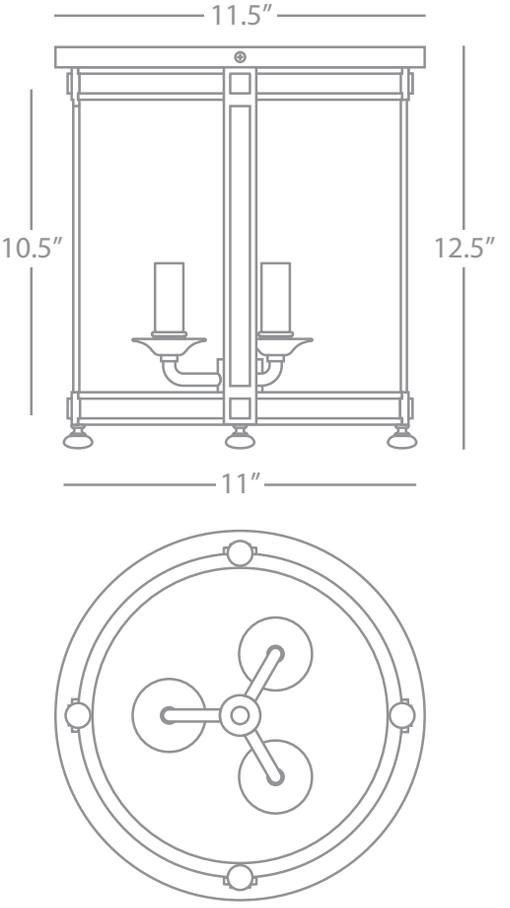



3340B



3341W



3352B

Kate

KATE

3340B

Table Lamp

1 - 150W Max.
Bulb Type: A
Switch: 3-Way
Clear Glass Column w/ Polished Nickel & Gunmetal Accents
Black Pleated Organza Shade

FINISH/SHADE OPTIONS:

3340W	Clear Glass Body White Pleated Organza Shade
3341B	White Glass Body Black Pleated Organza Shade
3341W	White Glass Body White Pleated Organza Shade
3342B	Black Glass Body Black Pleated Organza Shade
3342W	Black Glass Body White Pleated Organza Shade

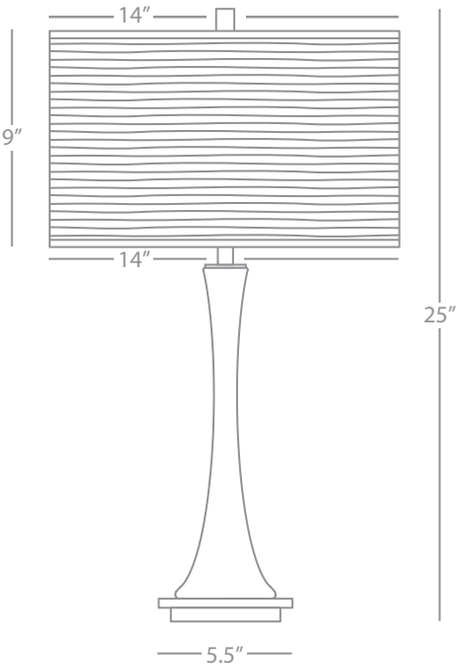

KATE

3352B

Table Lamp

1 - 150W Max.
Bulb Type: A
Switch: 3-Way
Black Glass Column w/ Polished Nickel & Gunmetal Accents
Black Pleated Organza Shade

FINISH/SHADE OPTIONS:

3350B	Clear Glass Body Black Pleated Organza Shade
3350W	Clear Glass Body White Pleated Organza Shade
3351B	White Glass Body Black Pleated Organza Shade
3351W	White Glass Body White Pleated Organza Shade
3352W	Black Glass Body White Pleated Organza Shade

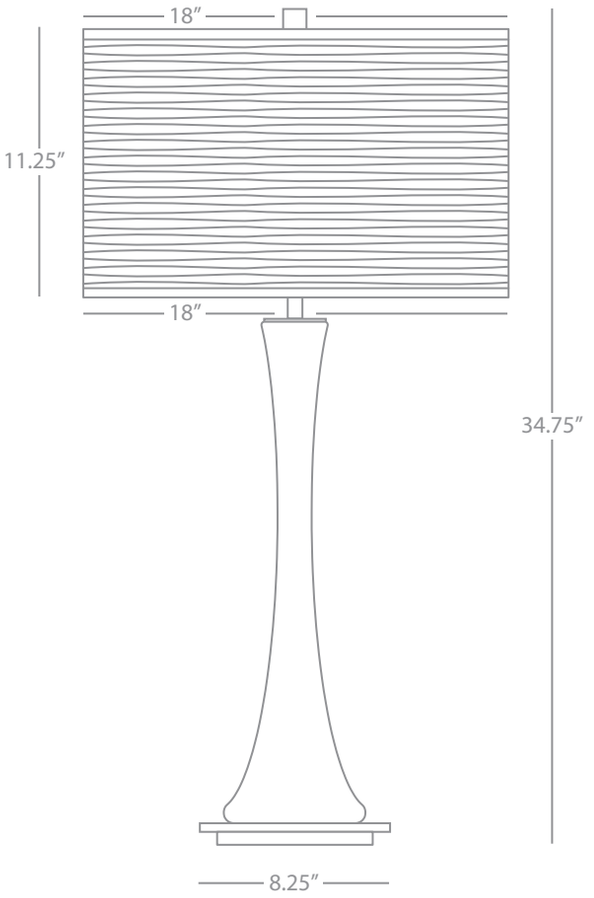



3368



3367



3369



3370

Gossamer

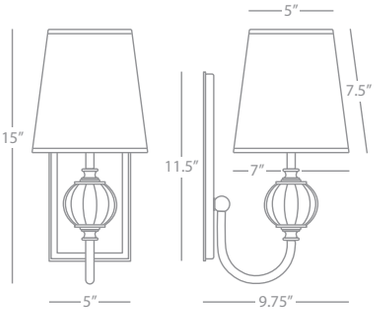

GOSSAMER

3368

Wall Sconce

1 - 100W Max.
Bulb Type: A
Direct Wire Only
Weathered Brass Finish w/
Lead Crystal & Antique Mirror Accents
Oyster Gray Silk Shade w/
Gold Foil Lining

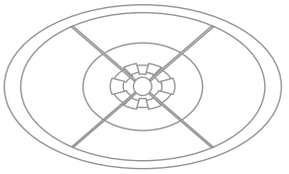

GOSSAMER

3370

Table Lamp

2 - 60W Max.
Bulb Type: G16 Medium Base
Switch: On-Off Pull Chains
Distressed Mercury Glass w/
Lead Crystal & Weathered Brass Accents
Oval Oyster Gray Silk Shade w/
Gold Foil Lining

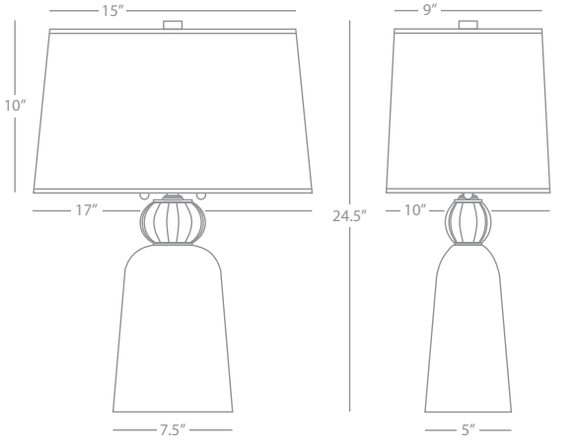

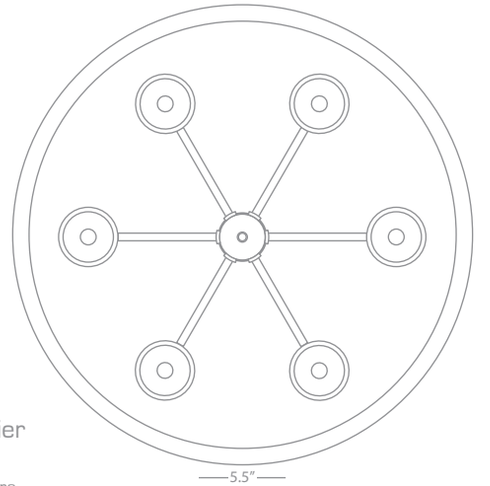

GOSSAMER

3367

6-Light Chandelier

6 - 60W Max.
Bulb Type: B, Candelabra
Direct Wire
Weathered Brass Finish w/ Distressed
Mercury Glass & Lead Crystal Accents
Oyster Gray Silk Shade w/
Gold Foil Lining
Susp. Hardware: 3 pcs. 5/8" x 12" &
1 pc. 5/8" x 6" Extensions

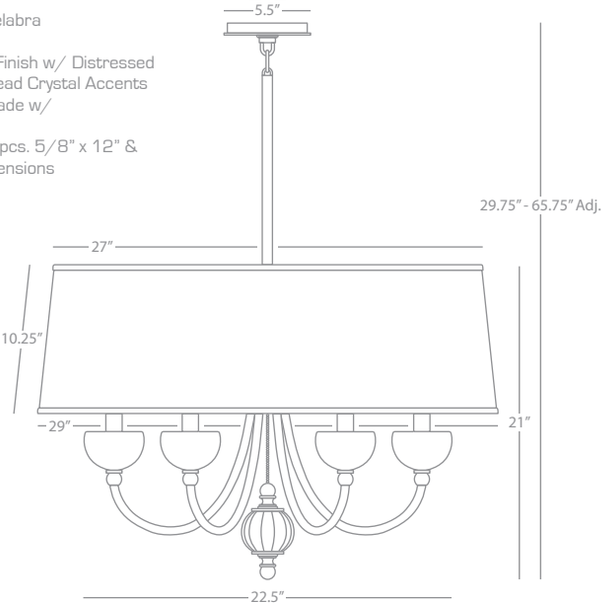

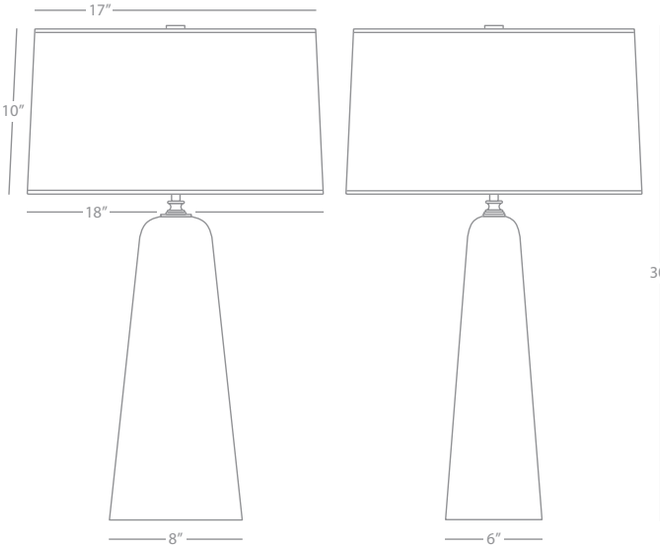

GOSSAMER

3369

Tall Table Lamp

1 - 150W Max.
Bulb Type: A
Switch: Hi-Lo Dimming
Distressed Mercury Glass w/
Weathered Brass Finished Accents
Oyster Gray Silk Shade w/
Gold Foil Lining



3376



D3374



D3372



3371

Latitude

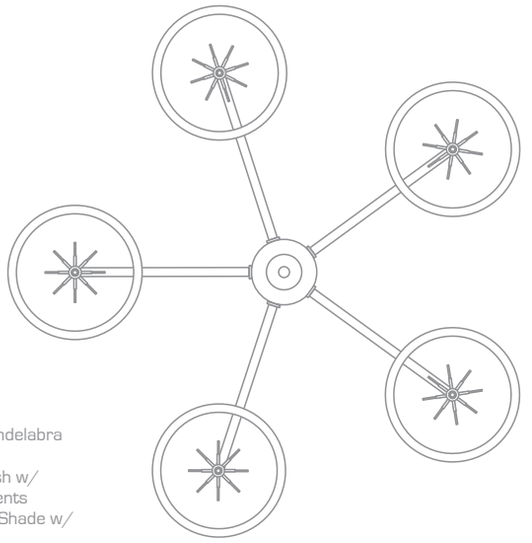

LATITUDE

3376

Chandelier

5 - 60W Max.
Bulb Type: B, Candelabra
Direct Wire
Aged Brass Finish w/
Clear Glass Accents
Oyster Gray Silk Shade w/
Gold Foil Lining
Susp. Hardware: 3 pcs. 5/8" x 12"
& 1 pc. 5/8" x 6" Extensions

FINISH/SHADE OPTION:
D3376 Dark Antique Nickel
Off-White Silk Shade w/
Silver Foil Lining

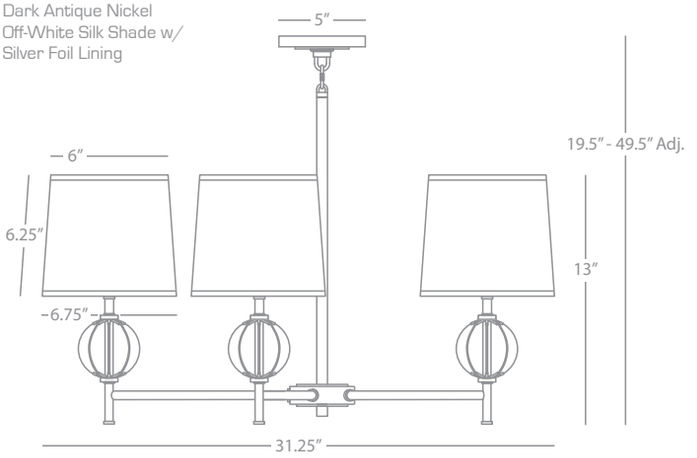

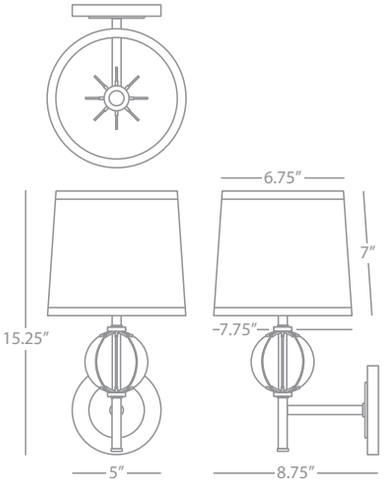

LATITUDE

D3374

Wall Sconce

1 - 60W Max.
Bulb Type: B, Candelabra
Switch: Hi-Lo Line Switch
24" Cord Cover/Direct Wire
Dark Antique Nickel Finish
Off-White Silk Shade w/
Silver Foil Lining

FINISH/SHADE OPTION:
3374 Aged Brass
Oyster Gray Silk Shade w/
Gold Foil Lining

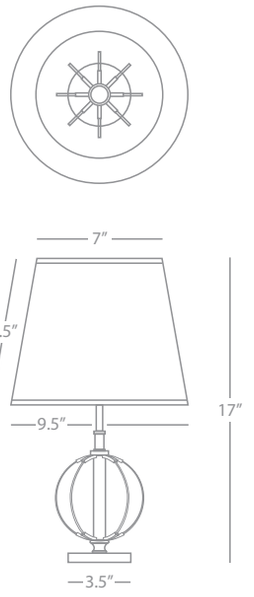

LATITUDE

3371

Accent Lamp

1 - 60W Max.
Bulb Type: B, Candelabra
Switch: Hi-Lo Line Switch
Aged Brass Finish w/
Clear Glass Accents
Oyster Gray Silk Shade w/
Gold Foil Lining

FINISH/SHADE OPTION:
D3371 Dark Antique Nickel
Off-White Silk Shade w/
Silver Foil Lining

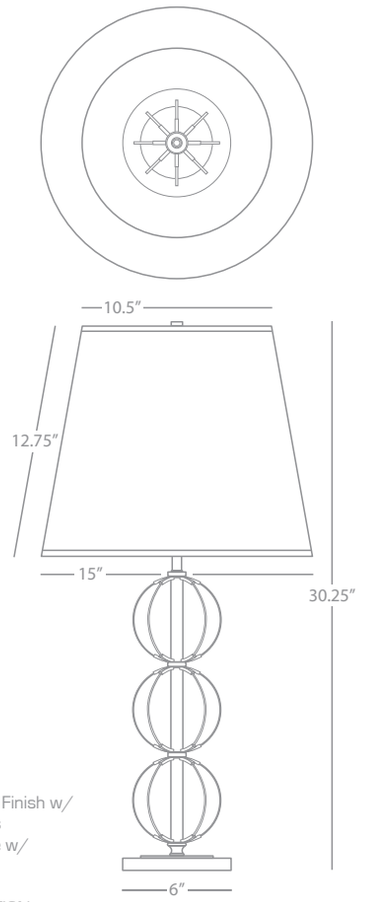

LATITUDE

D3372

Table Lamp

1 - 150W Max.
Bulb Type: A
Switch: 3-Way
Dark Antique Nickel Finish w/
Clear Glass Accents
Off-White Silk Shade w/
Silver Foil Lining

FINISH/SHADE OPTION:
3372 Aged Brass Accents
Oyster Gray Silk Shade w/
Gold Foil Lining



3373



3375



D3377

Latitude

LATITUDE

3375

Half Round Wall Sconce

1 - 100W Max.
Bulb Type: A
Direct Wire Only
Aged Brass Finish
Clear Glass Shade Panels
Ships with 1 - 30W Filament Bulb
[HIS02 See page 202]

FINISH OPTION:
D3375 Dark Antique Nickel

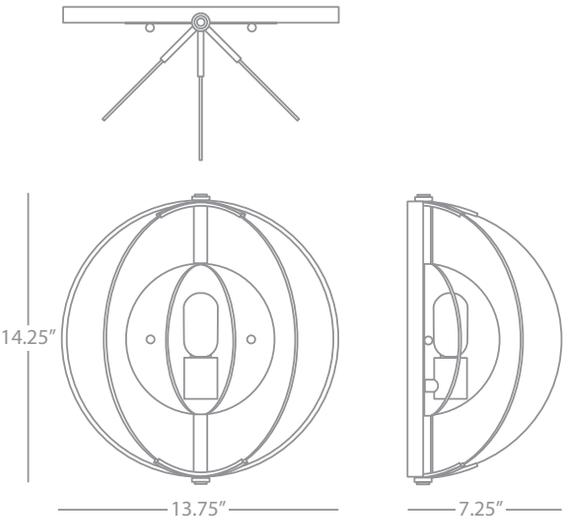

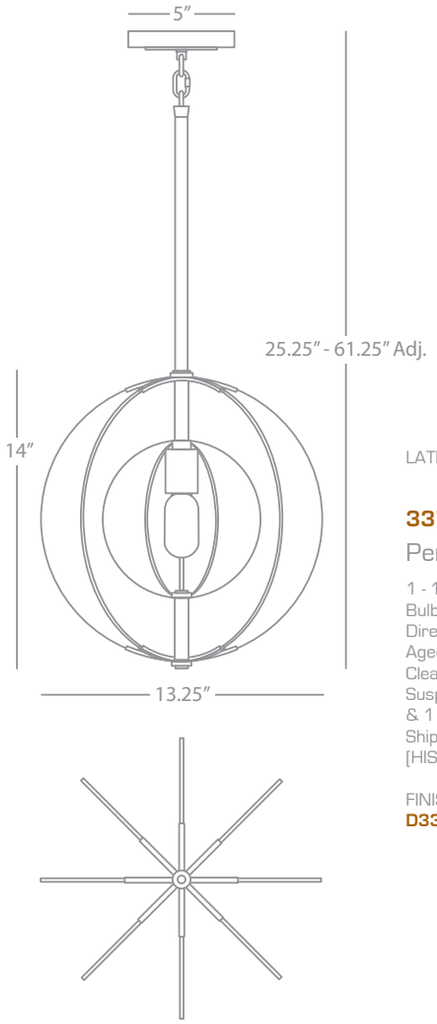

LATITUDE

3373

Pendant

1 - 100W Max.
Bulb Type: A
Direct Wire
Aged Brass Finish w/
Clear Glass Accents
Susp. Hardware: 3 pcs. 5/8" x 12"
& 1 pc. 5/8" x 6" Extensions
Ships with 1 - 30W Filament Bulb
[HIS02 See page 202]

FINISH OPTION:
D3373 Dark Antique Nickel

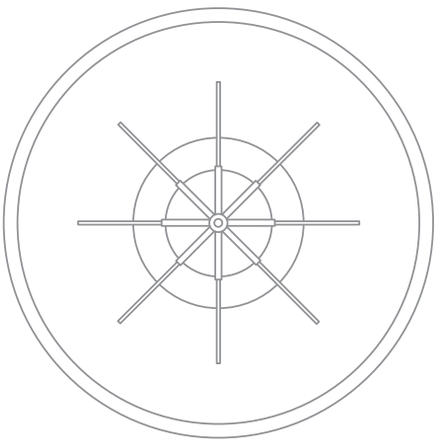

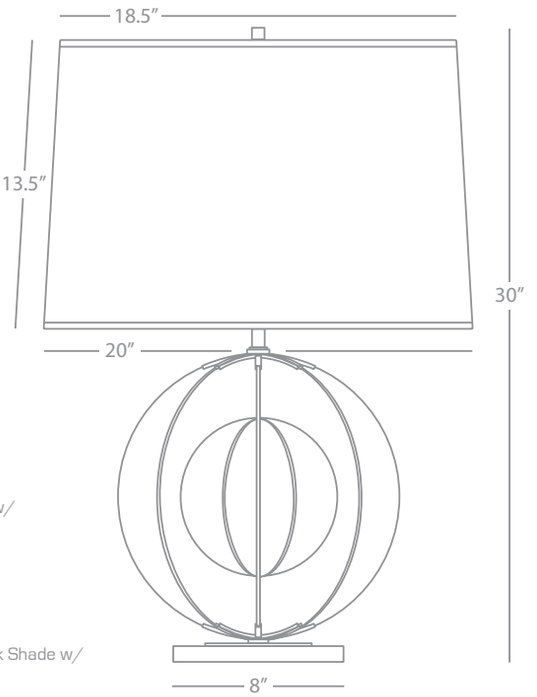

LATITUDE

D3377

Table Lamp

1 - 150W Max.
Bulb Type: A
Switch: 3-Way
Dark Antique Nickel Finish w/
Clear Glass Accents
Off-White Silk Shade w/
Silver Foil Lining

FINISH/SHADE OPTION:
3377 Aged Brass
Oyster Gray Silk Shade w/
Gold Foil Lining



3382



S3381



S3380

Alice

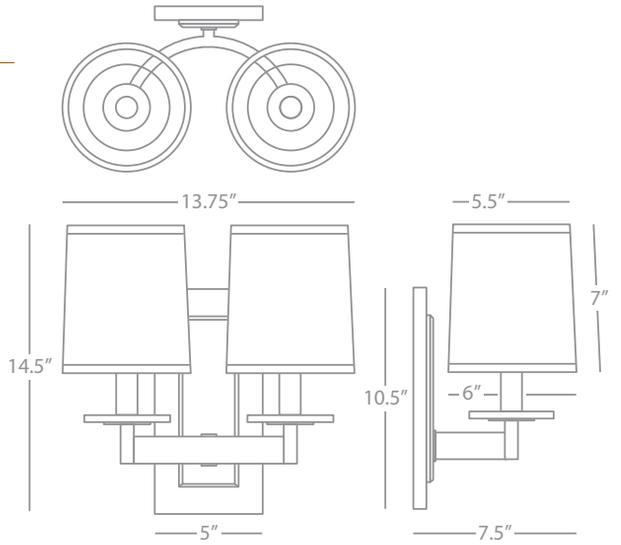

ALICE

3382

Double Sconce

2 - 60W Max.
Bulb Type: B, Candelabra
Switch: On-Off Line Switch
24" Cord Cover/Direct Wire
Antique Brass Finish w/
Lucite Accents
Pearl Dupoini Fabric Shade

FINISH OPTION:
S3382 Polished Nickel

ALICE

S3381

Single Sconce

1 - 60W Max.
Bulb Type: B, Candelabra
Switch: On-Off Line Switch
24" Cord Cover/Direct Wire
Polished Nickel FInish w/
Lucite Accents
Pearl Dupoini Fabric Shade

FINISH OPTION:
3381 Antique Brass

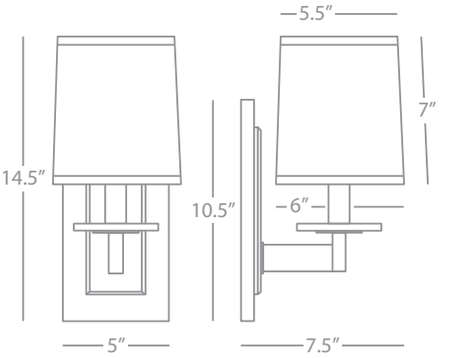

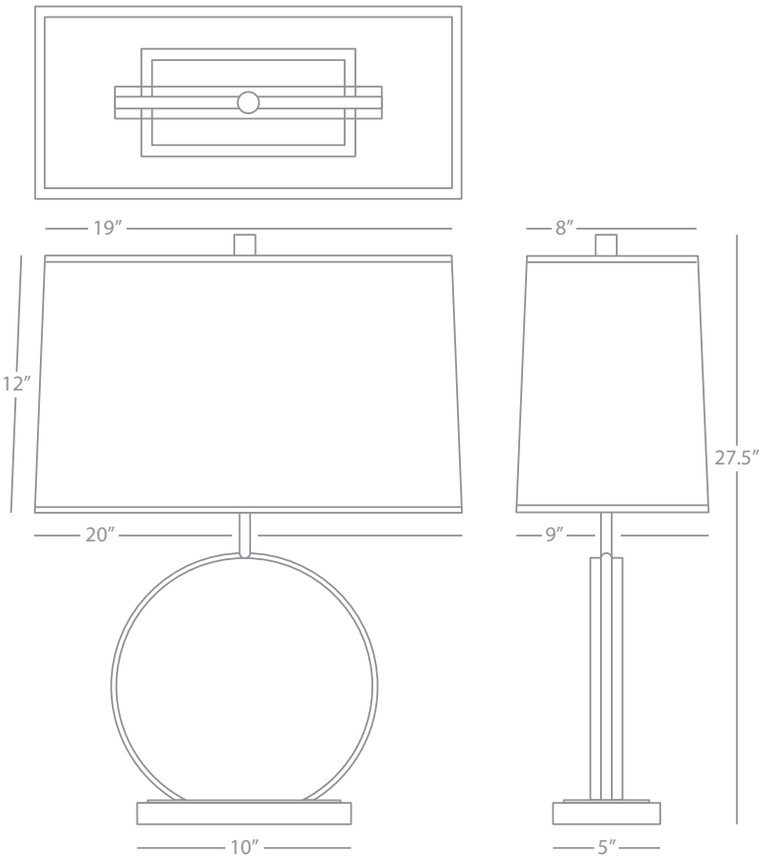

ALICE

S3380

Table Lamp

1 - 150W Max.
Bulb Type: A
Switch: Hi-Lo Dimming
Polished Nickel Finish w/
Lucite Accents
Rectangular Pearl Dupoini Fabric
Shade

FINISH OPTION:
3380 Antique Brass



3390



B3390



S3390

Axiom

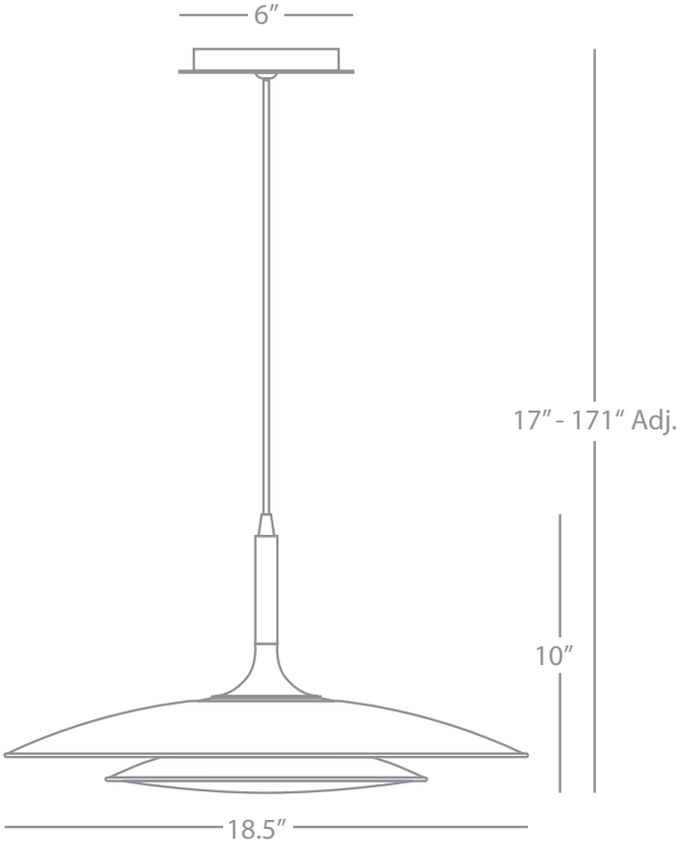

AXIOM

3390

Pendant

3 - 35W Max.
Bulb Type: 120V G6.35 Bi-Pin Halogen
Bulbs Included
Direct Wire
Polished Gold Finish
Frosted, White Cased Glass Diffuser
Susp. Hardware: 12 Ft. Black Fabric
Wrapped Cord

FINISH OPTIONS:
B3390 Gloss Black
S3390 Polished Nickel



4238



S4238



4237



S4237

Wonton

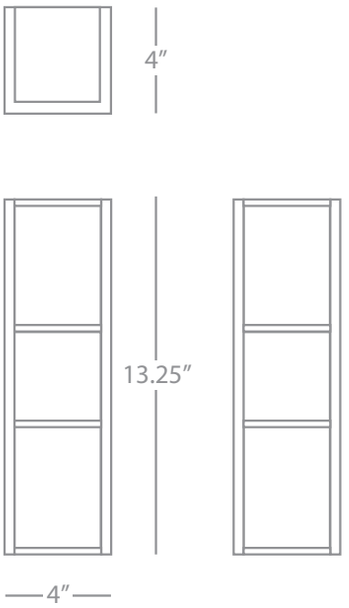

WONTON

4238

Wall Sconce

2 - 60W Max.
Bulb Type: B, Candelabra
Direct Wire Only
Deep Patina Bronze
w/ Cherry Finished Wood Accents
White Cased Glass Panels

FINISH OPTION:
S4238 Silver Plate w/ Weathered Ebony Finished Wood

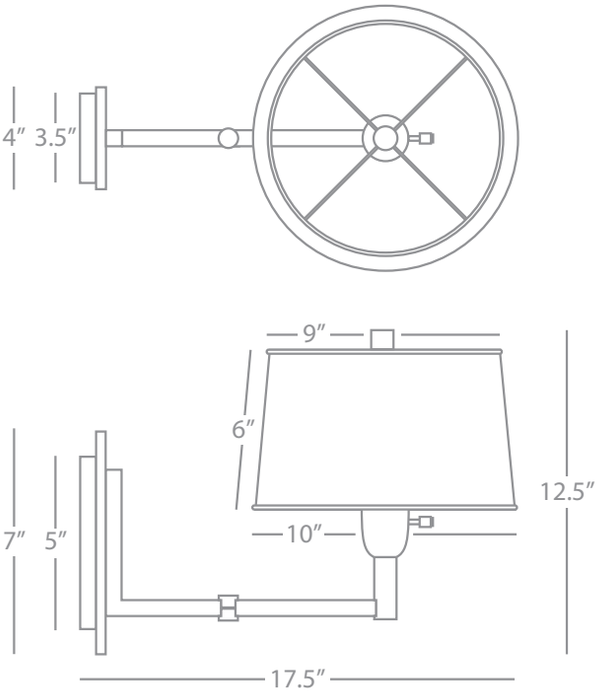

WONTON

S4237

Swing Arm Sconce

1 - 100W Max.
Bulb Type: A
Switch: Full Range Dimmer
24" Cord Cover/Direct Wire
Silver Plate Finish
w/ Weathered Ebony Finished Wood Accents
Off-White Linen Shade w/ Rolled Edge Hem

FINISH/SHADE OPTION:
4237 Deep Patina Bronze w/ Cherry Finished Wood
Light Beige Linen Shade



S4501



Z4500
Shown with 4500N shades



Z4500



4501
Shown with 4501B shades

Delany

DELANY

S4501
Rectangular Chandelier

10 - 60W Max.
Bulb Type: B, Candelabra
2 - 35W Max. for Down Light
Bulb Type: GU10 MR16 Halogen
Direct Wire
Polished Nickel Finish
Susp. Hardware: 2 pcs. 5/8" x 6"
& 6 pcs. 5/8" x 12" Extensions

FINISH OPTIONS:
4501 Antique Brass
Z4501 Deep Patina Bronze

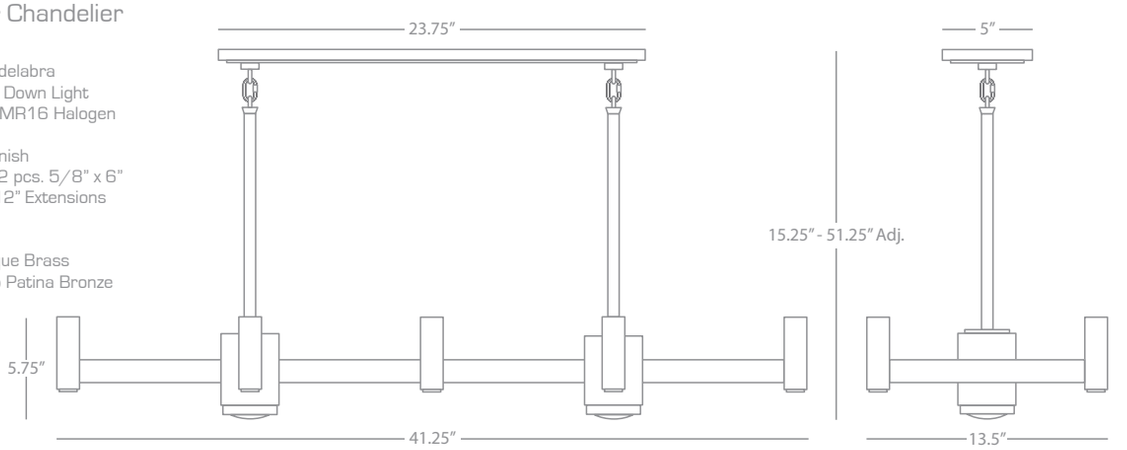

DELANY

4501N
Shades Only for Rectangular Chandelier

Oyster Linen Shades
Nickel Candle Followers
QTY: 10

FINISH OPTION:
4501B Brass Candle Followers



DELANY

Z4500
Round Chandelier

8 - 60W Max.
Bulb Type: B, Candelabra
1 - 35W Max. for Down Light
Bulb Type: GU10 MR16 Halogen
Direct Wire
Deep Patina Bronze Finish
Susp. Hardware: 1 pc. 5/8" x 6"
& 3 pcs. 5/8" x 12" Extensions

FINISH OPTIONS:
4500 Antique Brass
S4500 Polished Nickel

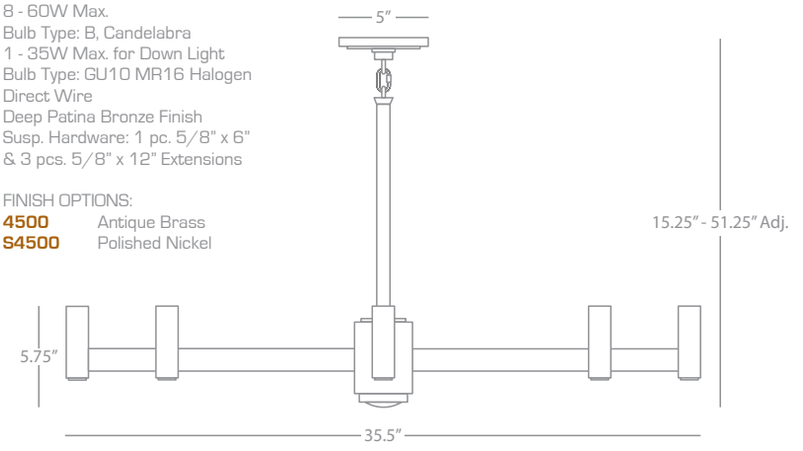

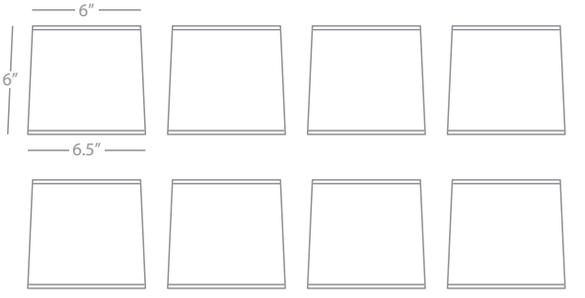

DELANY

4500N
Shades Only for Round Chandelier

Oyster Linen Shades
Nickel Candle Followers
QTY: 8

FINISH OPTION:
4500B Brass Candle Followers



S5001



5000



Z5002

Monroe

MONROE

S5001

Column Table Lamp

2 - 100W Max.
Bulb Type: A
Switch: Hi-Lo Pull Chains
Polished Nickel Finish
Oyster Linen Shade

FINISH OPTIONS:
5001 Antique Brass
Z5001 Deep Patina Bronze

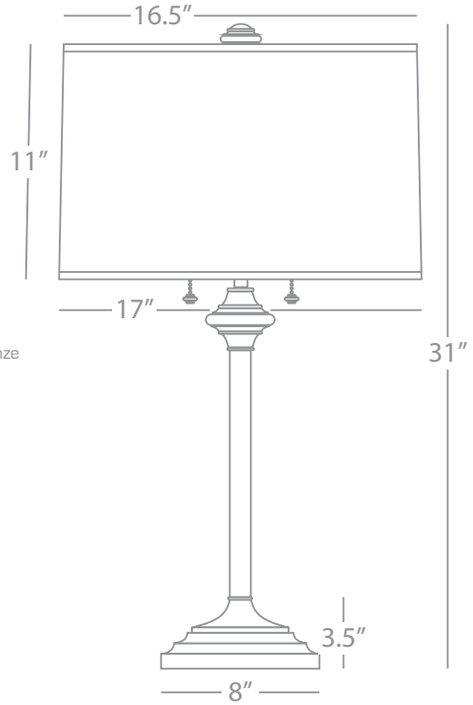

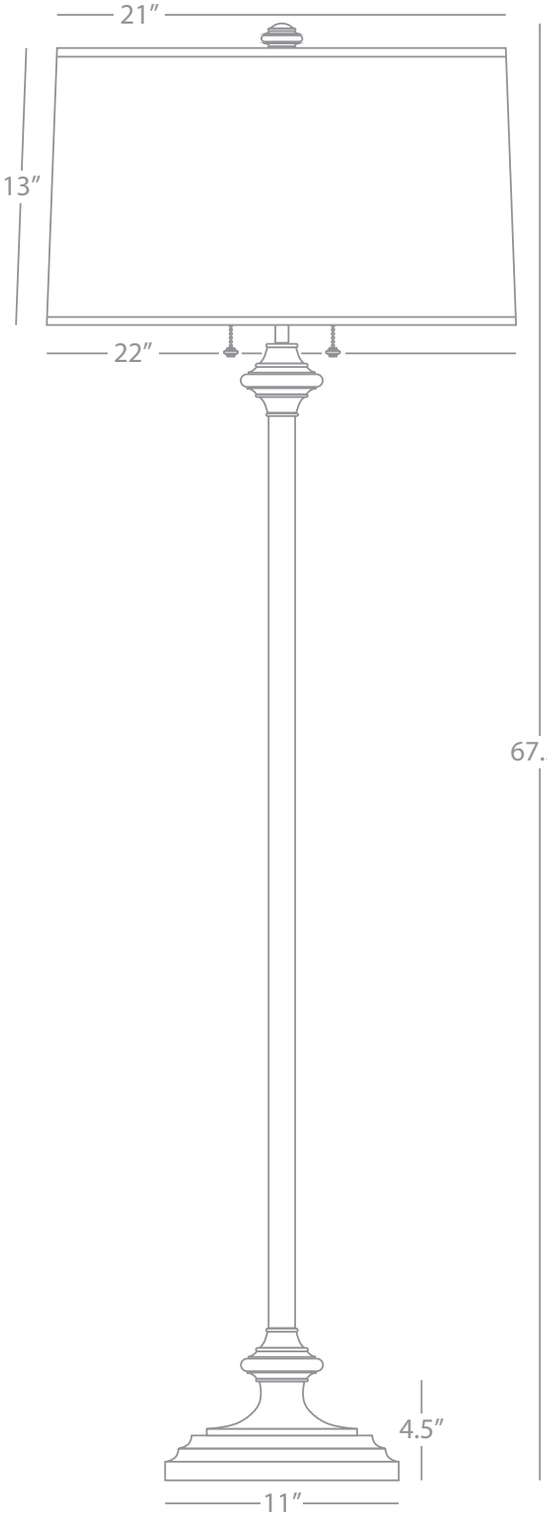

MONROE

Z5002

Column Floor Lamp

2 - 100W Max.
Bulb Type: A
Switch: Hi-Lo Pull Chains
Deep Patina Bronze Finish
Oyster Linen Shade

FINISH OPTIONS:
5002 Antique Brass
S5002 Polished Nickel

MONROE

5000

Table Lamp

1 - 150W Max.
Bulb Type: A
Switch: Hi-Lo Dimming
Antique Brass Finish
Oyster Linen Shade

FINISH OPTIONS:
S5000 Polished Nickel
Z5000 Deep Patina Bronze

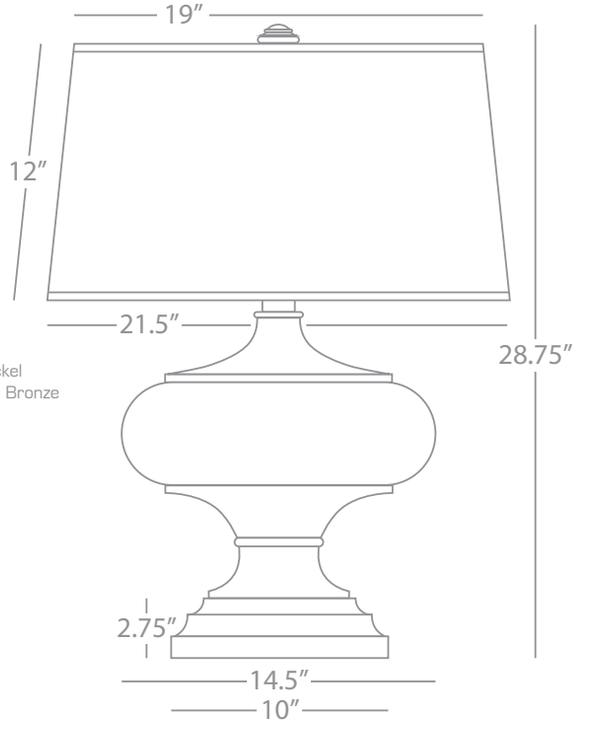



9857X



9867B



9866



9856

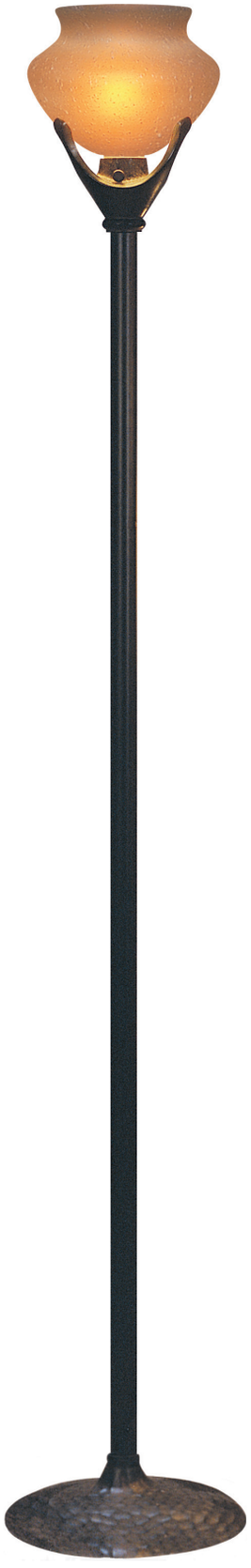

9824BRN

Beaux Arts

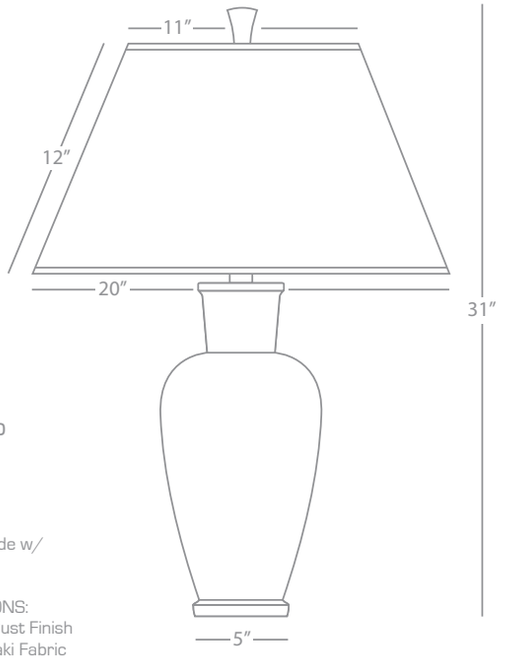

BEAUX ARTS

9867B

Urn Table Lamp

1 - 150W Max.
Bulb Type: A
Switch: 3-Way
Antique Copper Finish
Black Parchment Shade w/
Gold Tortoise Lining

FINISH/SHADE OPTIONS:

9857	Antique Rust Finish Golden Saki Fabric
9857X	Antique Rust Finish Translucent Flax Parchment
9867	Dark Antique Copper Finish Oyster Linen

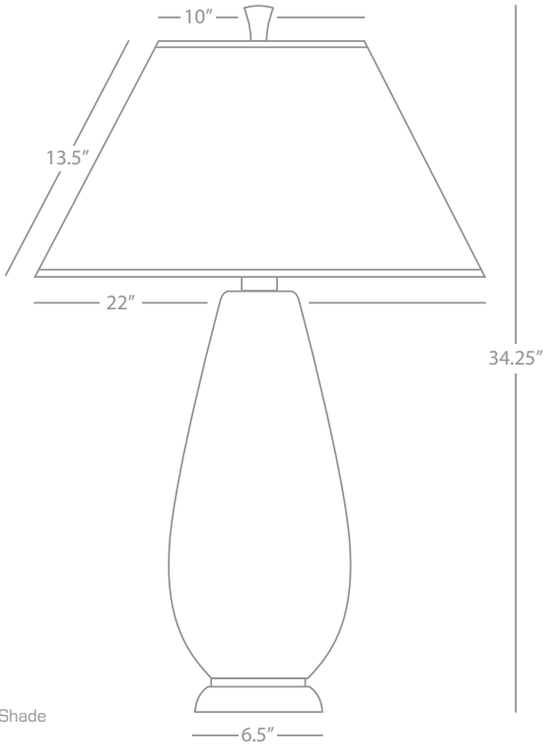

BEAUX ARTS

9856

Table Lamp

1 - 150W Max.
Bulb Type: A
Switch: 3-Way
Antique Rust Finish
Golden Saki Fabric Shade

FINISH/SHADE OPTIONS:

9856X	Antique Rust Finish Translucent Flax Parchment
9866	Dark Antique Copper Finish Oyster Linen
9856B	Dark Antique Copper Finish Black Parchment w/ Gold Tortoise Lining

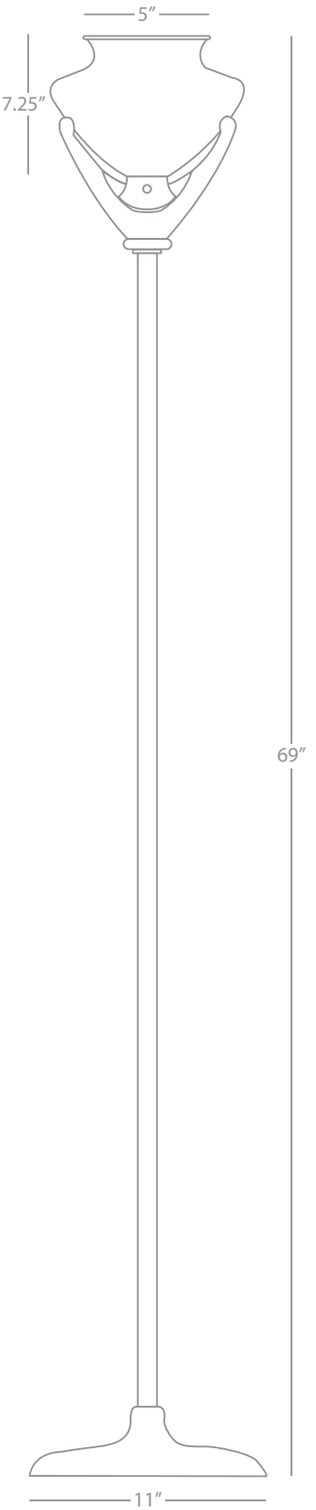

BEAUX ARTS

9824BRN

Floor Torchiere

1 - 150W Max.
Bulb Type: A
Switch: 3-Way
Antiqued Rust Finish
Frosted, Amber Seeded Glass Shade



9890

Laurelton

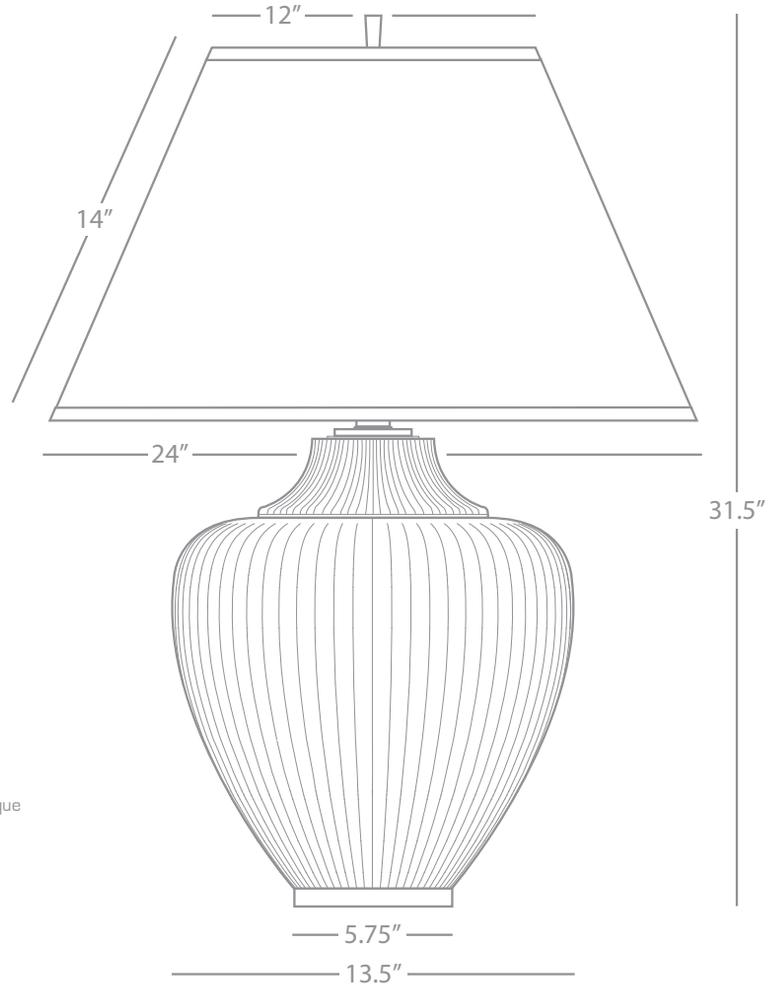

LAURELTON

9890

Louis Large Pot

1 - 150W Max.
Bulb Type: A
Switch: 3-Way
Buddha Bronze Finish w/ Pale Sage Antique Mist Saki Fabric Shade



9938COP



9938KRST



9939KCOP



9939XRST

Foundry

FOUNDRY

9938COP

Horizontally Gifted Pot

1 - 150W Max.
Bulb Type: A
Switch: 3-Way
Copper Finish
Natural Fabric Shade

FINISH/SHADE OPTIONS:

9938KCOP	Copper Brussels Linen Natural
9938KRST	Antique Rust Brussels Linen Natural
9938XRST	Antique Rust Translucent Flax Parchment

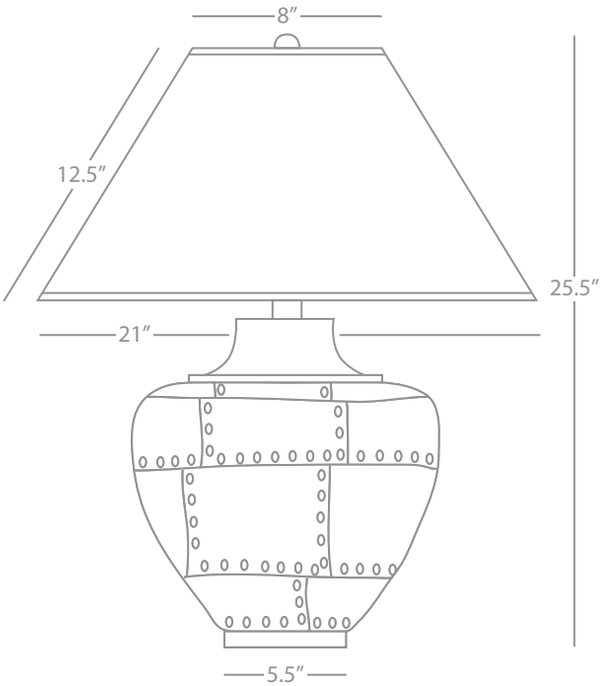

FOUNDRY

9939XRST

Vertically Gifted Pot

1 - 150W Max.
Bulb Type: A
Switch: 3-Way
Antique Rust Finish
Translucent Flax Parchment Shade

FINISH/SHADE OPTIONS:

9939KRST	Antique Rust Brussels Linen Natural
9939COP	Copper Natural Fabric
9939BCOP	Copper Black Parchment Shade
9939KCOP	Copper Brussels Linen Natural

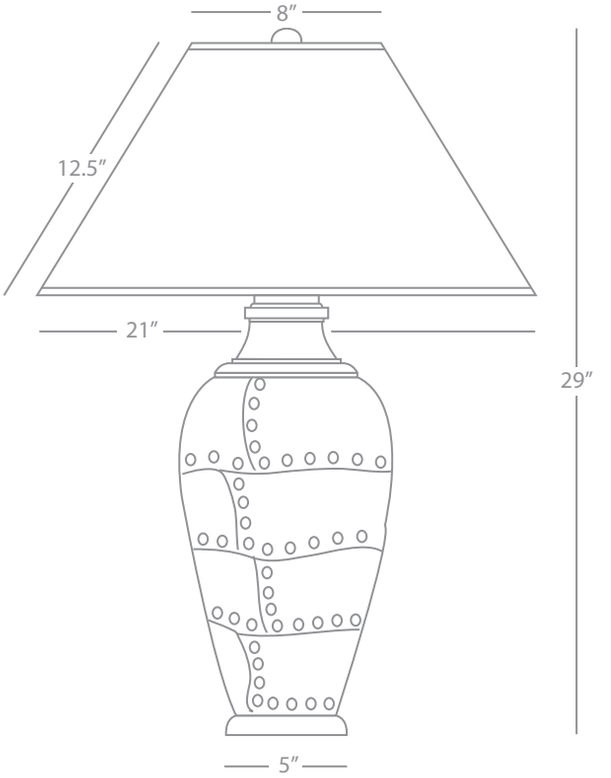



MICHELLE OXENBERG

The visual art of Michelle Oxenberg Jordan stems from her Brooklyn childhood spent drawing, painting, and observing. Amazing her family with her innate drawing skills, her parents began nurturing her creativity at the young age of five with Saturday art classes. Earning her degree from the University of North Carolina at Charlotte, she further developed her keen eye for color, detail, and design. Michelle began her career in 2001 by joining the design department at Robert Abbey Inc. Intrigued by the shapes and shadows of facial expressions and the human form, her work illustrates everyday life with color and modern imagery. Michelle's eye for composition, along with her attraction to shape and design, enables her to create extraordinary drawings of ordinary subjects. Painting and charcoal are among her favorite mediums, but working in a digital format allows her the freedom to play with the perspective and visual scale of her work to produce evocative images like "Legs" and "The Dance". Michelle is currently the Design Director for Robert Abbey Inc. and resides in Hickory, North Carolina with her husband, Steve, and their two children, Leah and Samuel.

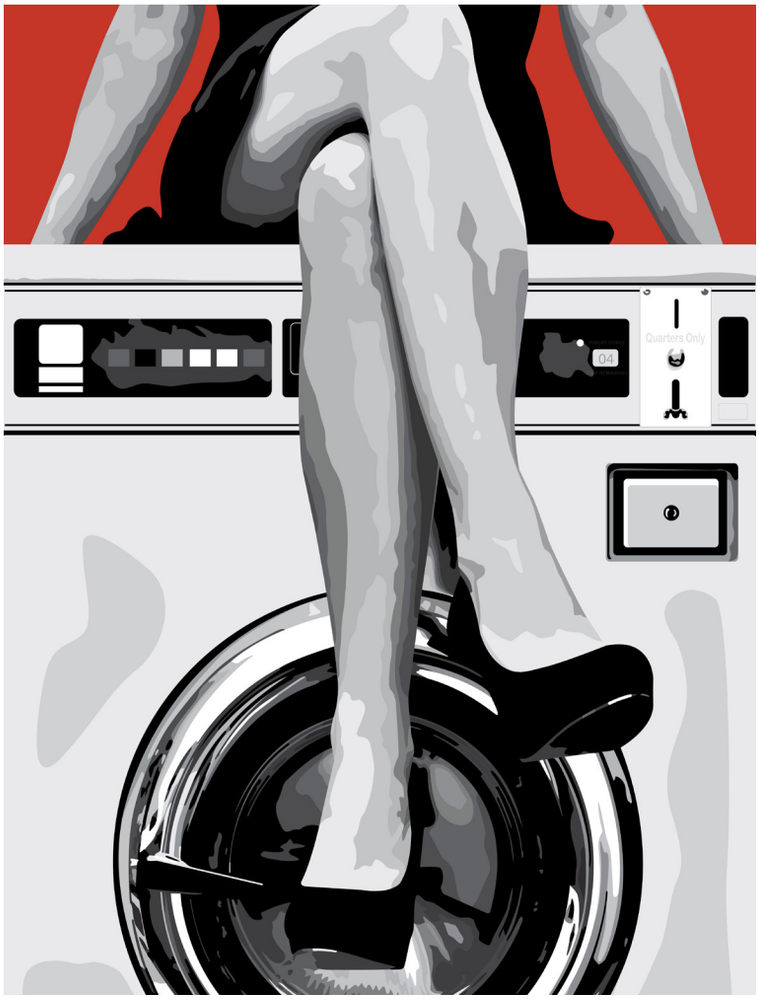

ART24



ART20

MICHELLE OXENBERG



ART21



ART45



ART22



ART17

Artwork by Michelle Oxenberg



LEGS
ART13, ART14, ART23



WAITING FOR YOU
ART37, ART38, ART39



COME CLOSER
ART01, ART02, ART17



SMOKIN
ART07, ART08, ART20

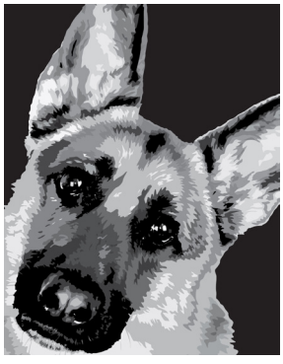

UNCONDITIONAL LOVE
ART43, ART44, ART45



THE DANCE
ART11, ART12, ART22

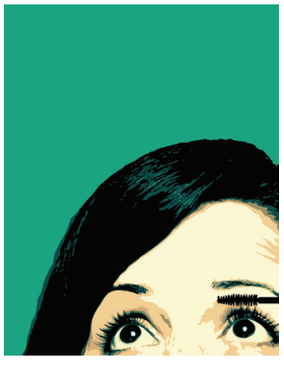

LOOK UP
ART05, ART06, ART19



PARASOL
ART46, ART47, ART48



BLOT
ART09, ART10, ART21



LAUNDRY
ART13, ART14, ART24



FISHNETS
ART40, ART41, ART42

Artwork by Michelle Oxenberg

ARTWORK BY MICHELLE OXENBERG

11" x 14" Print

Printed on Canvas
Gallery Wrapped around a 1.5" Thick Wooden Frame Sealed With a Fine Art Coating

OPTIONS:

ART01	Come Closer
ART05	Look Up
ART07	Smokin
ART09	Blot
ART11	The Dance
ART15	Laundry
ART13	Legs
ART37	Waiting for You
ART40	Fishnets
ART43	Unconditional Love
ART46	Parasol

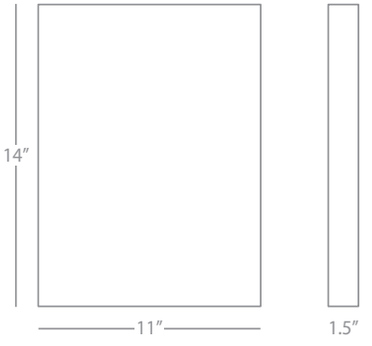

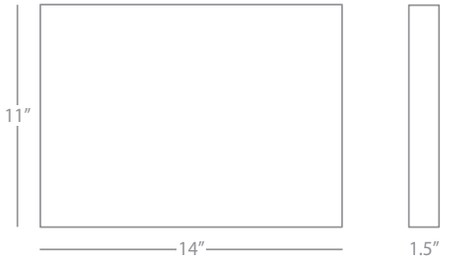

ARTWORK BY MICHELLE OXENBERG

16" x 20" Print

Printed on Canvas
Gallery Wrapped around a 1.5" Thick Wooden Frame Sealed With a Fine Art Coating

OPTIONS:

ART02	Come Closer
ART06	Look Up
ART08	Smokin
ART10	Blot
ART12	The Dance
ART16	Laundry
ART14	Legs
ART38	Waiting for You
ART41	Fishnets
ART44	Unconditional Love
ART47	Parasol

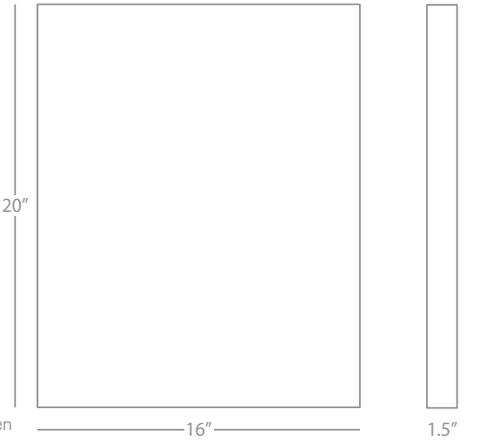

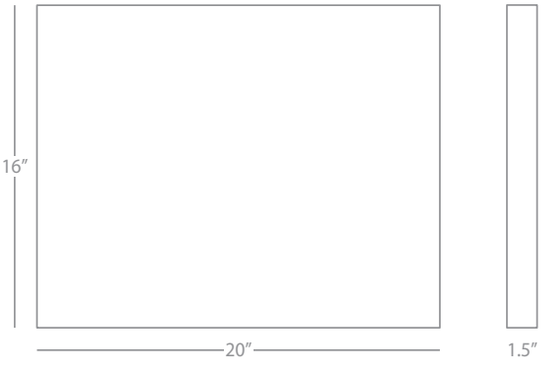

ARTWORK BY MICHELLE OXENBERG

20" x 24" Print

Printed on Canvas
Gallery Wrapped around a 1.5" Thick Wooden Frame Sealed With a Fine Art Coating

OPTIONS:

ART17	Come Closer
ART19	Look Up
ART20	Smokin
ART21	Blot
ART22	The Dance
ART23	Legs
ART24	Laundry
ART39	Waiting for You
ART42	Fishnets
ART45	Unconditional Love
ART48	Parasol

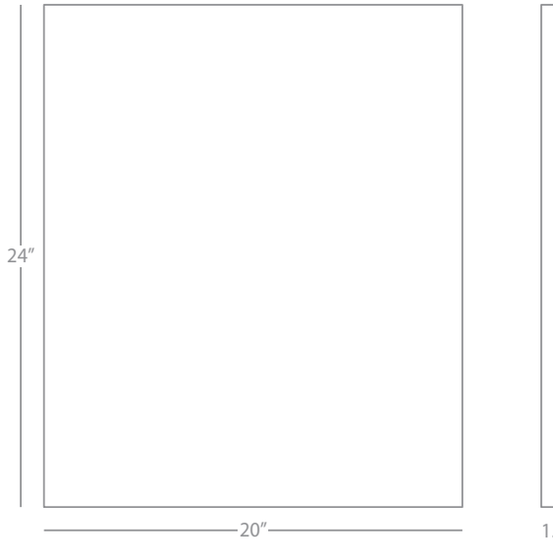



RICO ESPINET

Rico Espinet is known for creating striking, poetic environments that combine clean lines and simple forms. Reflecting his training as a sculptor and a preoccupation with personal interiors, Rico's design sensibility is grounded in materials and values that endure. He mixes furnishings, lighting, accessories, industrial objects and fine art to create comfortable yet extraordinary spaces. His popular Robert Abbey Lighting collections feature warm, often atmospheric light inspired by the beauty of everyday objects.



Photograph by Joe Gaffney



Z2100



1595



813

RICO ESPINET



Z2114



B2102



Z245



2803

Rico Espinet Plato



121



S120

Rico Espinet Plato

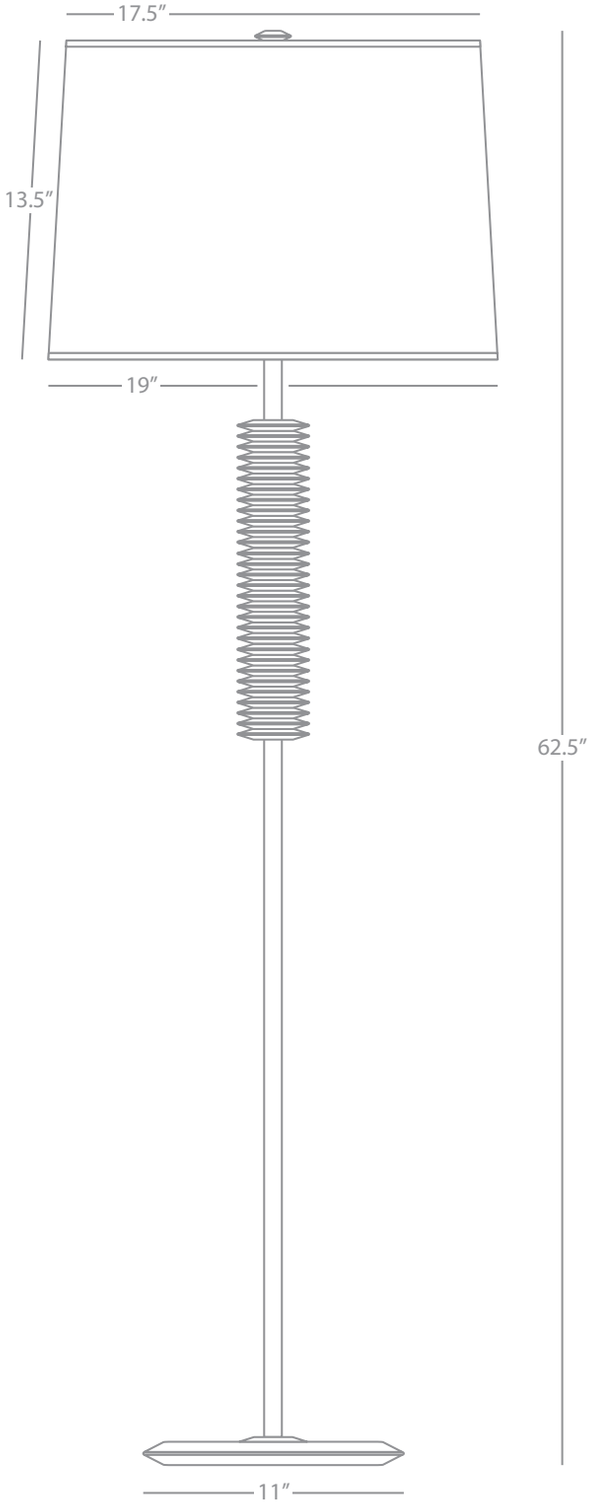

RICO ESPINET PLATO

121

Floor Lamp

1 - 150W Max.
Bulb Type: A
Switch: Hi-Lo Dimming
Deep Patina Bronze Finish w/
Antique Brass Accents
Fondine Fabric Shade w/
Contrasting Trim

FINISH/SHADE OPTION:

S121 Deep Patina Bronze w/
Antique Silver Accents
Ascot White Fabric w/
Contrasting Trim

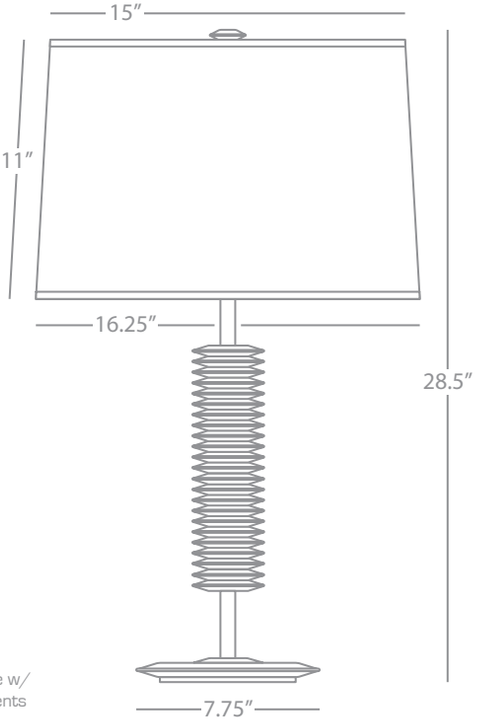

RICO ESPINET PLATO

S120

Table Lamp

1 - 150W Max.
Bulb Type: A
Switch: Hi-Lo Dimming
Deep Patina Bronze Finish w/
Antique Silver Accents
Ascot White Fabric Shade w/
Contrasting Trim

FINISH/SHADE OPTION:

120 Deep Patina Bronze w/
Antique Brass Accents
Fondine Fabric w/
Contrasting Trim

Rico Espinet Buster Globe



Z242



S243



Z244



241



240



S240

Rico Espinet Buster

RICO ESPINET BUSTER GLOBE

S243
Globe Pendant

1 - 100W Max.
Bulb Type: A
Switch: Direct Wire
Polished Nickel Finish
White Cased Glass Shade
Susp. Hardware: 3 pcs. 5/8" x 12"
& 1 pc. 5/8" x 6" Extensions

FINISH/SHADE OPTIONS:
243 Aged Brass
Topaz Seeded Glass
Z243 Deep Patina Bronze
Topaz Seeded Glass

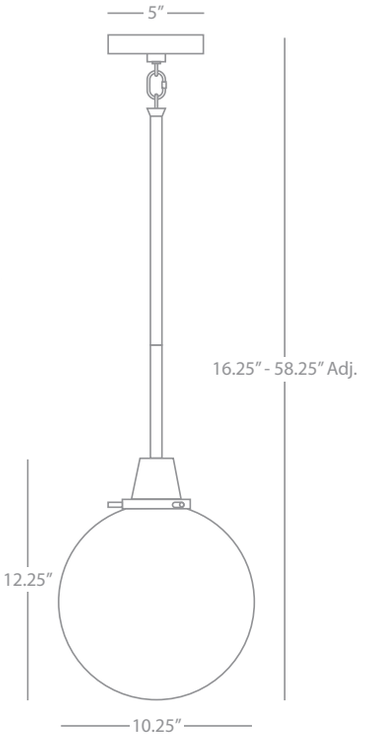

RICO ESPINET BUSTER GLOBE

Z244
Globe Quad Chandelier

4 - 60W Max.
Bulb Type: B11 Torpedo
Direct Wire
Deep Patina Bronze Finish
Topaz Seeded Glass Shade
Susp. Hardware: 12 pcs. 5/8" x 12"
& 4 pcs. 5/8" x 6" Extensions

FINISH/SHADE OPTIONS:
244 Aged Brass
Topaz Seeded Glass
S244 Polished Nickel
White Cased Glass

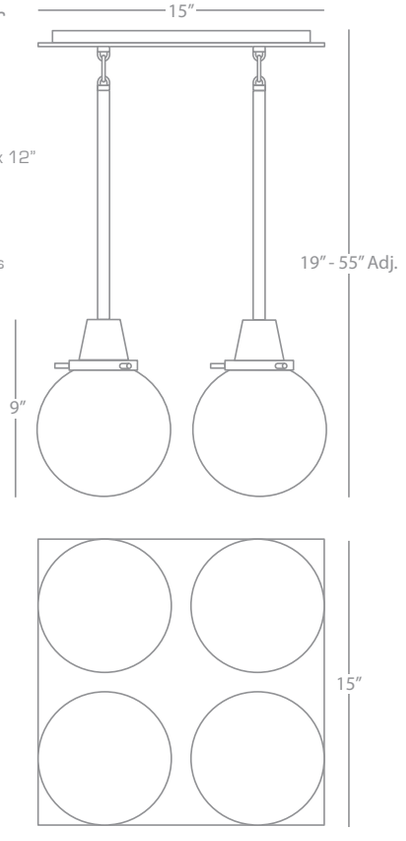

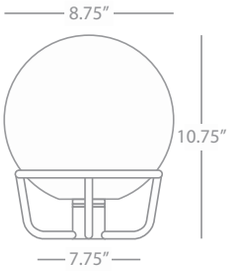

RICO ESPINET BUSTER GLOBE

240
Globe Accent Lamp

1 - 100W Max.
Bulb Type: A
Switch: Hi-Lo Line Switch
Aged Brass Finish
Topaz Seeded Glass Shade

FINISH/SHADE OPTIONS:
S240 Polished Nickel
White Cased Glass
Z240 Deep Patina Bronze
Topaz Seeded Glass

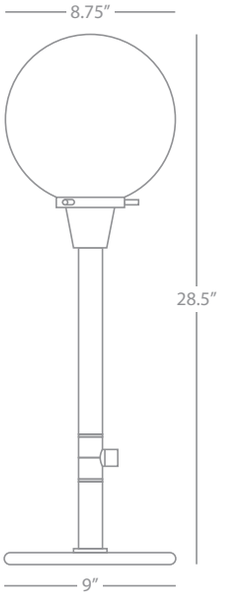

RICO ESPINET BUSTER GLOBE

241
Globe Table Lamp

1 - 100W Max.
Bulb Type: A
Switch: Full Range Dimmer
Aged Brass Finish
Topaz Seeded Glass Shade

FINISH/SHADE OPTIONS:
S241 Polished Nickel
White Cased Glass
Z241 Deep Patina Bronze
Topaz Seeded Glass

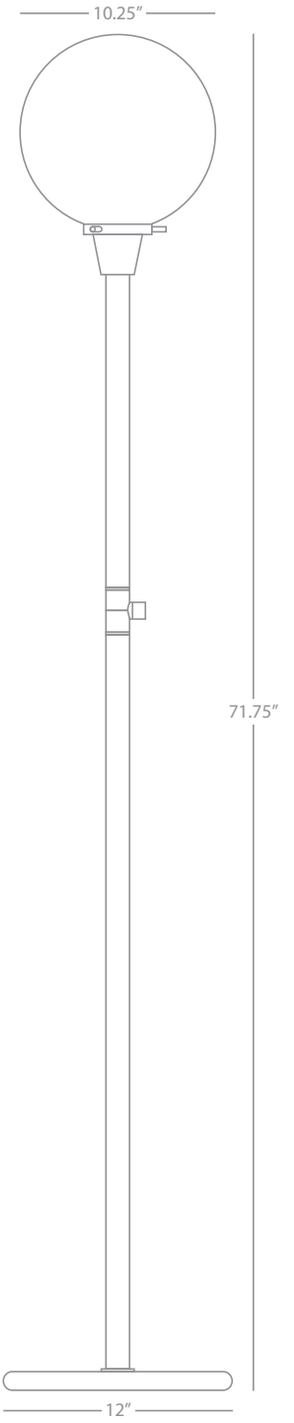

RICO ESPINET BUSTER GLOBE

Z242
Globe Floor Lamp

1 - 100W Max.
Bulb Type: A
Switch: Full Range Dimmer
Deep Patina Bronze Finish
Topaz Seeded Glass Shade

FINISH/SHADE OPTIONS:
242 Aged Brass
Topaz Seeded Glass
S242 Polished Nickel
White Cased Glass

Rico Espinet Tyler Globe



S245



245



Z245

Rico Espinet Tyler Globe

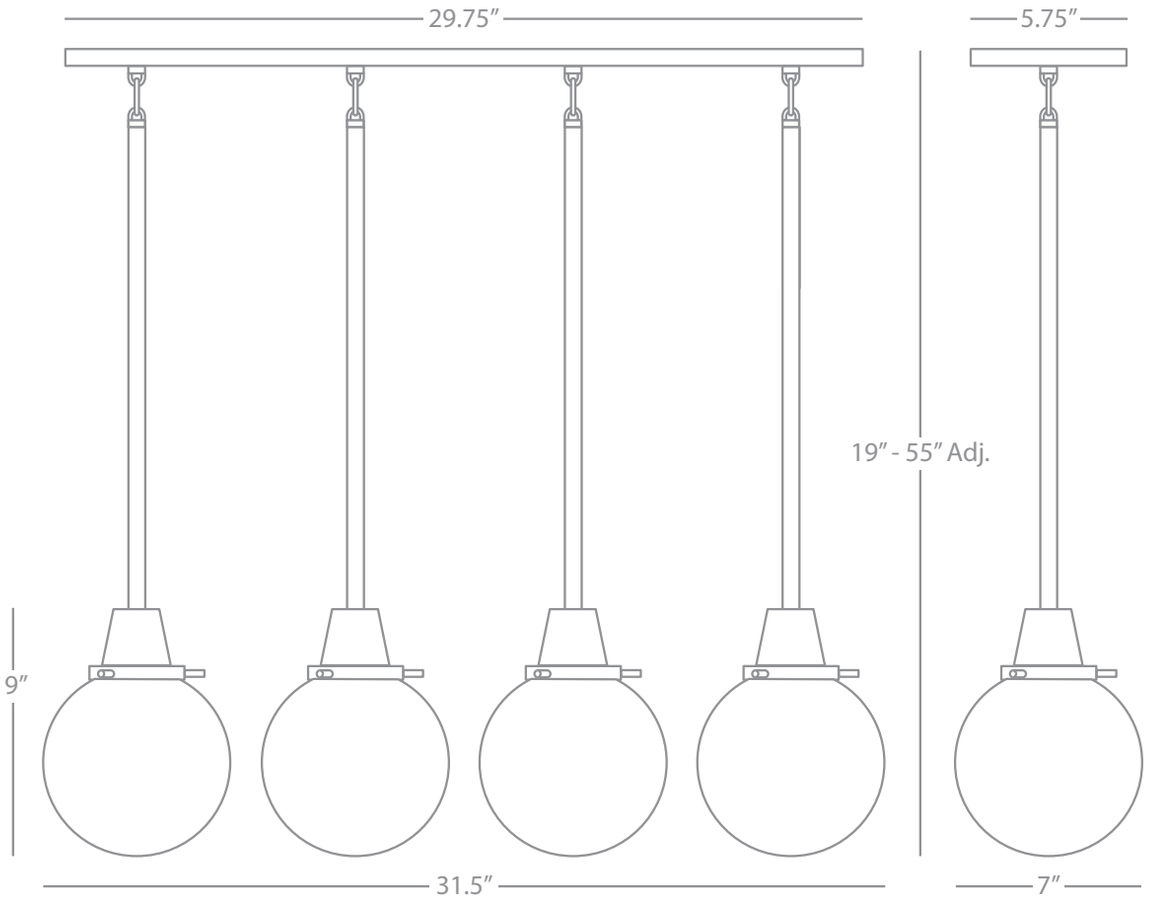

RICO ESPINET TYLER GLOBE

245

Linear Chandelier

4 - 60W Max.
Bulb Type: B, Medium Base
Direct Wire
Aged Brass Finish
Topaz Seeded Glass Shades
Susp. Hardware: 12 pcs. 5/8" x 12" &
4 pcs. 5/8" x 6" Extensions

FINISH/SHADE OPTIONS:

S245	Polished Nickel White Cased Glass
Z245	Deep Patina Bronze Topaz Seeded Glass

Rico Espinet Scout



246



S247

Rico Espinet Scout

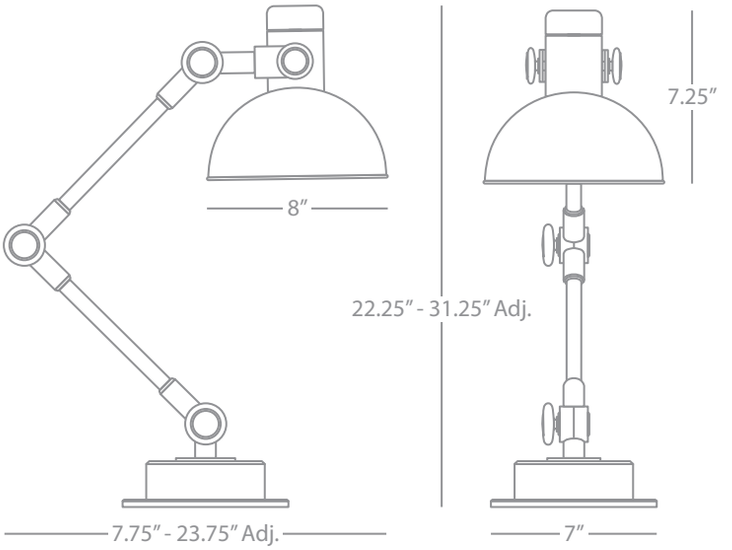

RICO ESPINET SCOUT

246

Adjustable Task Table Lamp

1 - 60W Max.
Bulb Type: A
Switch: Hi-Lo Dimming
Antique Brass Finish
Metal Shade

FINISH OPTION:
S246 Polished Nickel

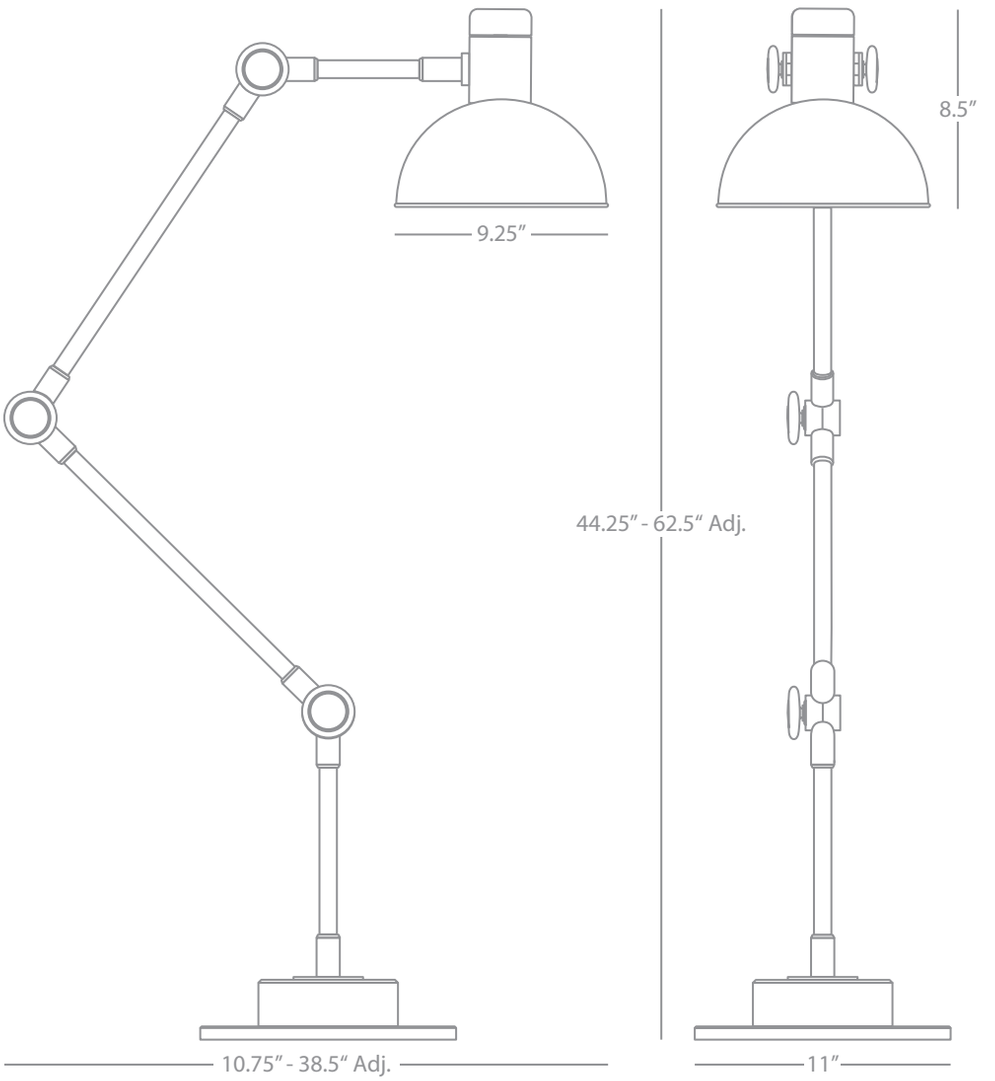

RICO ESPINET SCOUT

S247

Adjustable Task Floor Lamp

1 - 60W Max.
Bulb Type: A
Switch: Hi-Lo Dimming
Polished Nickel Finish
Metal Shade

FINISH OPTION:
247 Antique Brass

Rico Espinet Churchill



D813



D816



811



D812



814



815

Rico Espinet Churchill

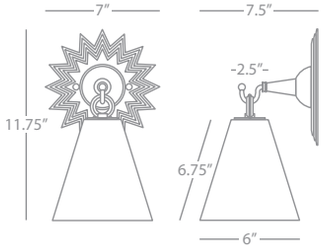

RICO ESPINET CHURCHILL

811
Small Wall Sconce

1 - 25W Max.
Bulb Type: B, Candelabra Base
Direct Wire Only
Aged Brass Finish
Faux - Alabaster Shade
UL Rated Damp Location

FINISH OPTION:
D811 Dark Antique Nickel

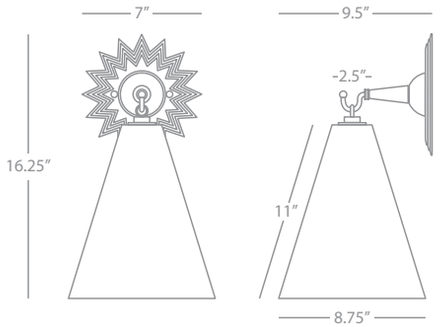

RICO ESPINET CHURCHILL

D816
Large Wall Sconce

1 - 60W Max.
Bulb Type: A
Direct Wire Only
Dark Antique Nickel Finish
Faux - Alabaster Shade
UL Rated Damp Location

FINISH OPTION:
816 Aged Brass



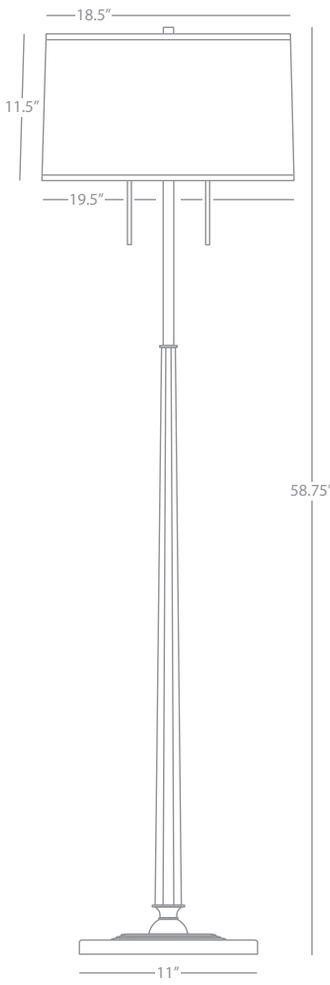

RICO ESPINET CHURCHILL

815
Floor Lamp

2 - 150W Max.
Bulb Type: A
Switch: Hi-Lo Pull Chains
Aged Brass Finish
Travertine Stone Base
Bone Dupoini Fabric Shade

FINISH/SHADE OPTION:
D815 Dark Antique Nickel
Pearl Dupoini

RICO ESPINET CHURCHILL

D812
Small Pendant

1 - 60W Max.
Bulb Type: A
Direct Wire
Dark Antique Nickel Finish
Faux - Alabaster Shade
Susp. Hardware: 3 pcs.
1/2" x 8" Extensions

FINISH OPTION:
812 Aged Brass

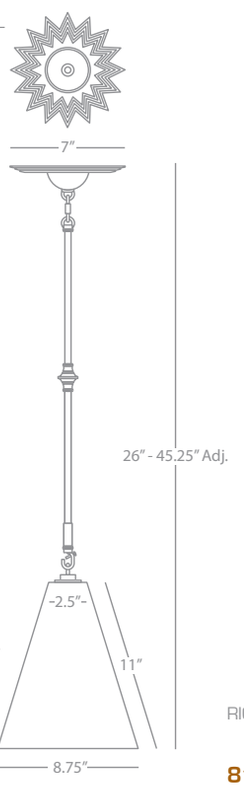

RICO ESPINET CHURCHILL

D813
Large Pendant

2 - 60W Max.
Bulb Type: A
Direct Wire
Dark Antique Nickel Finish
Faux - Alabaster Shade
Susp. Hardware: 9 pcs.
1/2" x 8" Extensions

FINISH OPTION:
813 Aged Brass

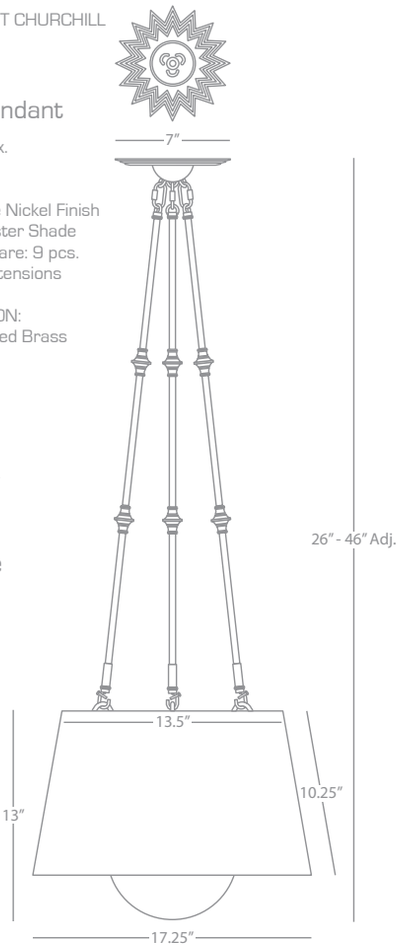

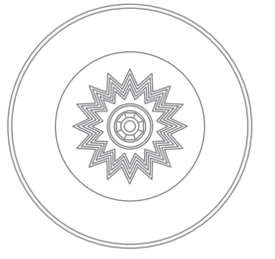

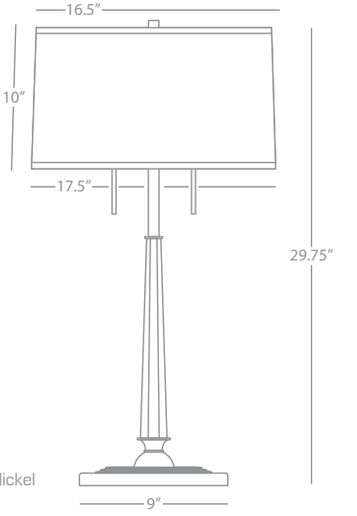

RICO ESPINET CHURCHILL

814
Table Lamp

2 - 150W Max.
Bulb Type: A
Switch: Hi-Lo Pull Chains
Aged Brass Finish
Travertine Stone Base
Bone Dupoini Fabric Shade

FINISH/SHADE OPTION:
D814 Dark Antique Nickel
Pearl Dupoini

Rico Espinet Adirondack



824

Rico Espinet Adirondack

RICO ESPINET ADIRONDACK

824

Gear Table Lamp

1 - 150W Max.
Bulb Type: A
Switch: Hi-Lo Dimming
Distressed Black Painted Finish
Ascot Khaki Fabric Shade

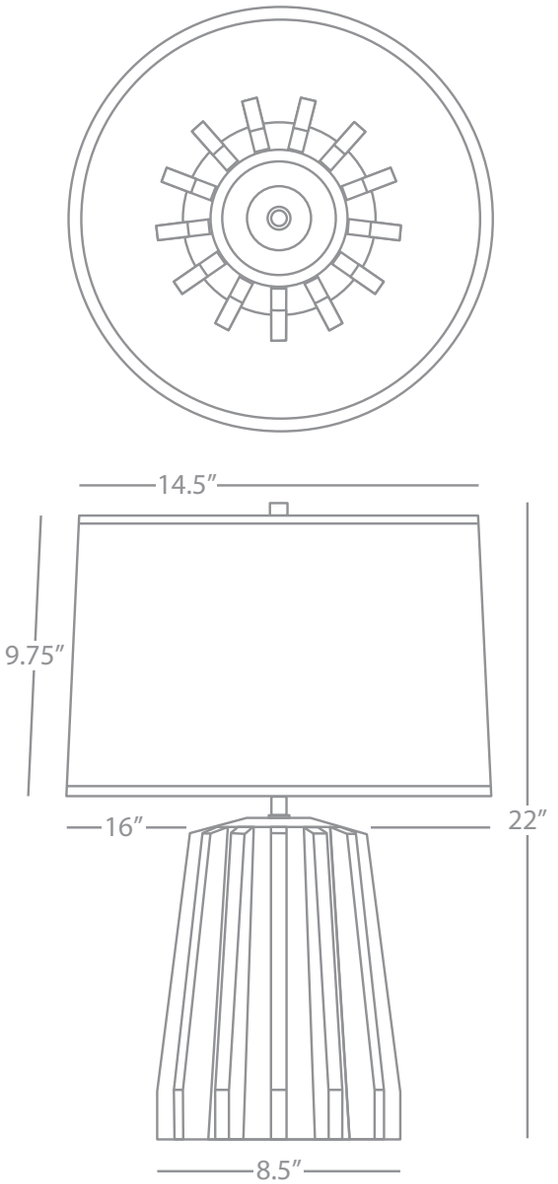

Rico Espinet Olinda



1580W



1581B



1578B



1579W

Rico Espinet Olinda

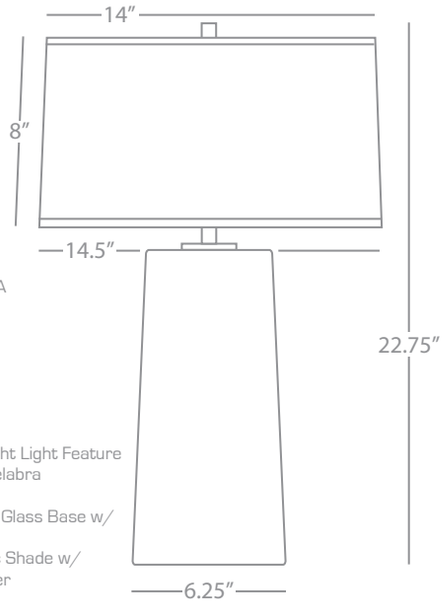

RICO ESPINET OLINDA

1580W
Table Lamp

1 - 100W Max
Bulb Type: A
1 - 7.5W Max. for Night Light Feature
Bulb Type: 7C7 Candelabra
Switch: 4-Way
Frosted White Cased Glass Base w/ Night Light
White Organza Fabric Shade w/ Self-Fabric Top Diffuser

SHADE OPTION:
1580B Black Organza

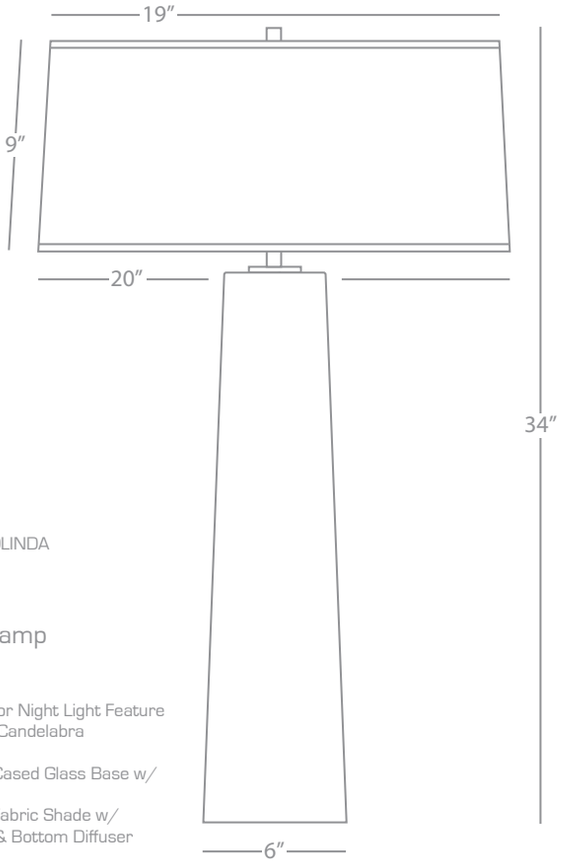

RICO ESPINET OLINDA

1578B
Tall Table Lamp

1 - 100W Max
Bulb Type: A
1 - 7.5W Max. for Night Light Feature
Bulb Type: 7C7 Candelabra
Switch: 4-Way
Frosted White Cased Glass Base w/ Night Light
Black Organza Fabric Shade w/ Self-Fabric Top & Bottom Diffuser

SHADE OPTION:
1578W White Organza

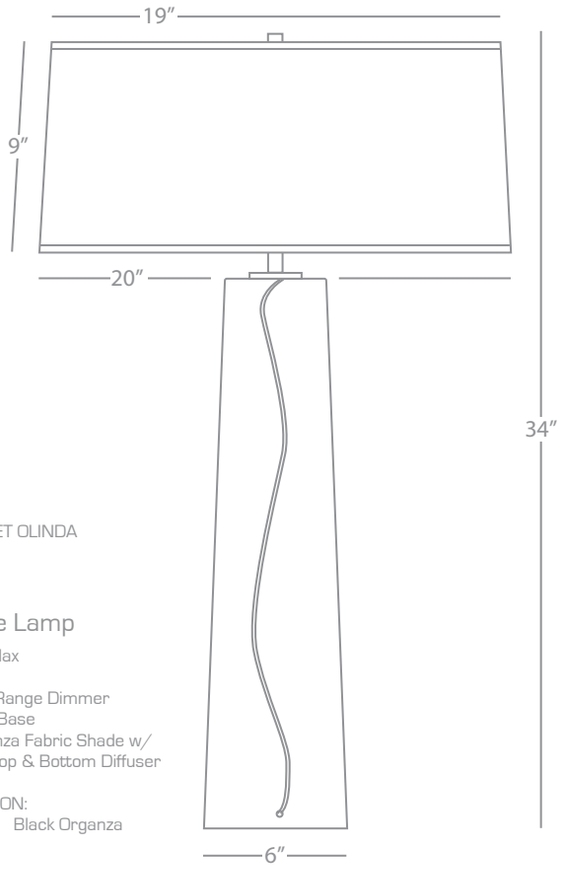

RICO ESPINET OLINDA

1579W
Tall Table Lamp

1 - 150W Max
Bulb Type: A
Switch: Full Range Dimmer
Clear Glass Base
White Organza Fabric Shade w/ Self-Fabric Top & Bottom Diffuser

SHADE OPTION:
1579B Black Organza

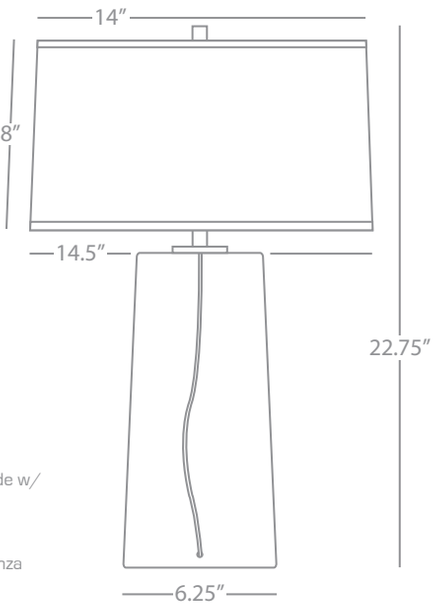

RICO ESPINET OLINDA

1581B
Table Lamp

1 - 100W Max
Bulb Type: A
Switch: Hi-Lo Dimming
Clear Glass Base
Black Organza Fabric Shade w/ Self-Fabric Top Diffuser

SHADE OPTION:
1581W White Organza



1585



1586

Rico Espinet Tatu

RICO ESPINET TATU

1585

Table Torchiere

1 - 60W Max.
Bulb Type: A
Switch: Full Range Line Dimmer
Frosted Prismatic Glass

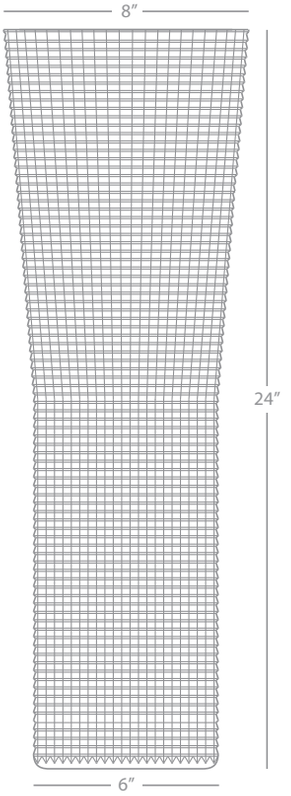

RICO ESPINET TATU

1586

Table Torchiere

1 - 60W Max.
Bulb Type: A
Switch: Full Range Line Dimmer
Frosted Prismatic Glass

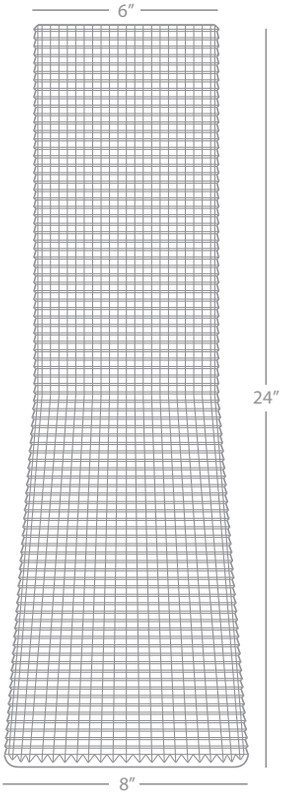

Rico Espinet Marina



1591



2024



1590

Rico Espinet Marina

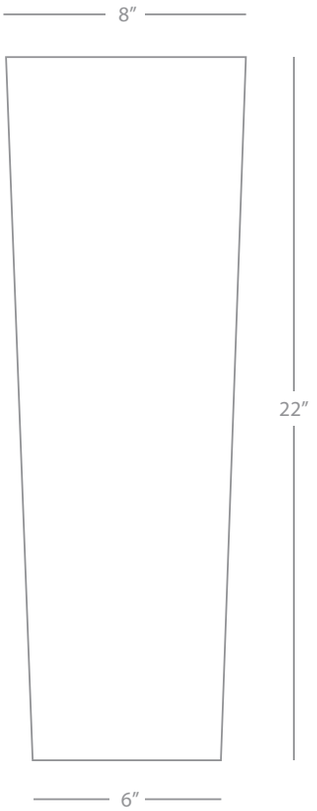

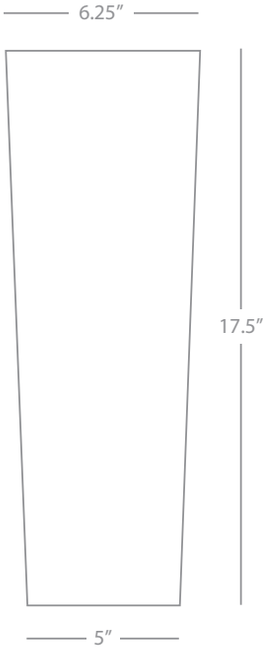

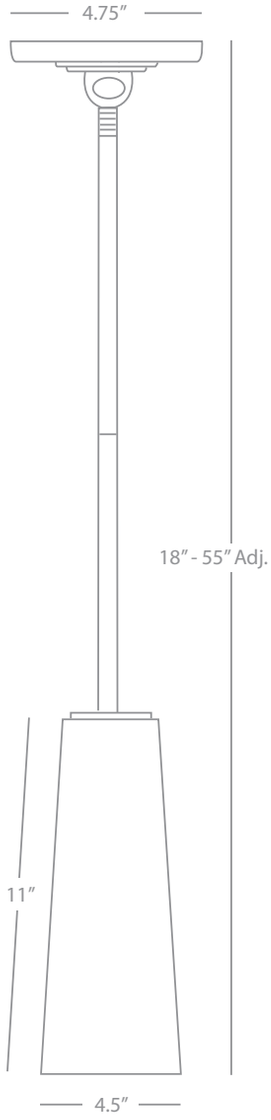

RICO ESPINET MARINA

1591

Marina Table Torchiere

1 - 60W Max.
Bulb Type: T10 Tubular
Switch: Full Range Line Dimmer
Frosted White Cased Glass

RICO ESPINET MARINA

1590

Nina Table Torchiere

1 - 60W Max.
Bulb Type: T10 Tubular
Switch: Full Range Line Dimmer
Frosted White Cased Glass

RICO ESPINET MARINA

2024

Pendant

1 - 60W Max.
Bulb Type: T10 Tubular
Direct Wire Only
Brushed Chrome Finish
Frosted White Cased Glass
Susp. Hardware: 3 pcs. 1/2" x 12"
& 1pc. 1/2" x 6" Extensions

Rico Espinet Lua Vessel



1596



1595

Rico Espinet Lua Vessel

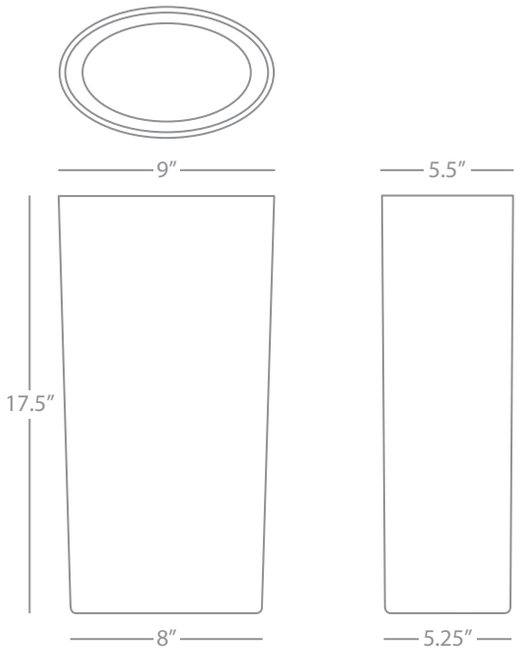

RICO ESPINET LUA VESSEL

1595

Small Torchiere

1 - 150W Max.
Bulb Type: A
Switch: Hi-Lo Line Switch
Oval White Cased Glass

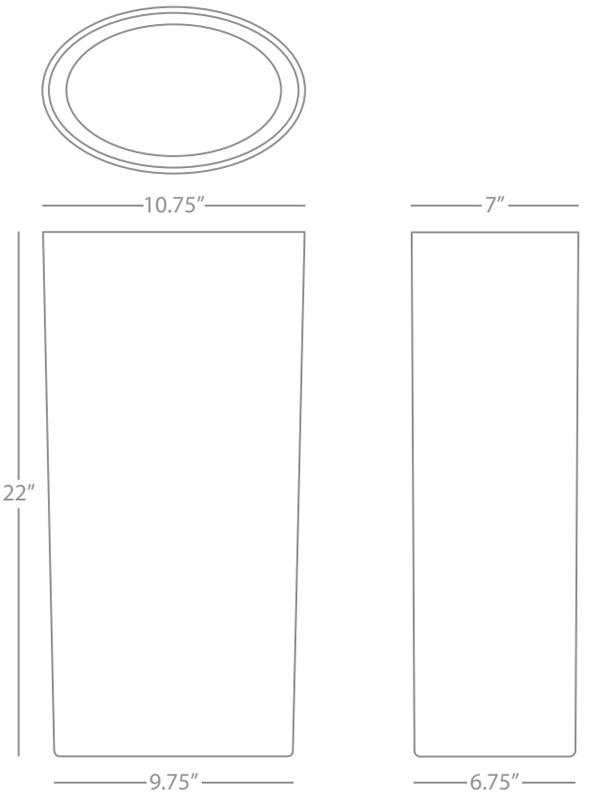

RICO ESPINET LUA VESSEL

1596

Large Torchiere

1 - 150W Max.
Bulb Type: A
Switch: Hi-Lo Line Switch
Oval White Cased Glass

Rico Espinet Nova

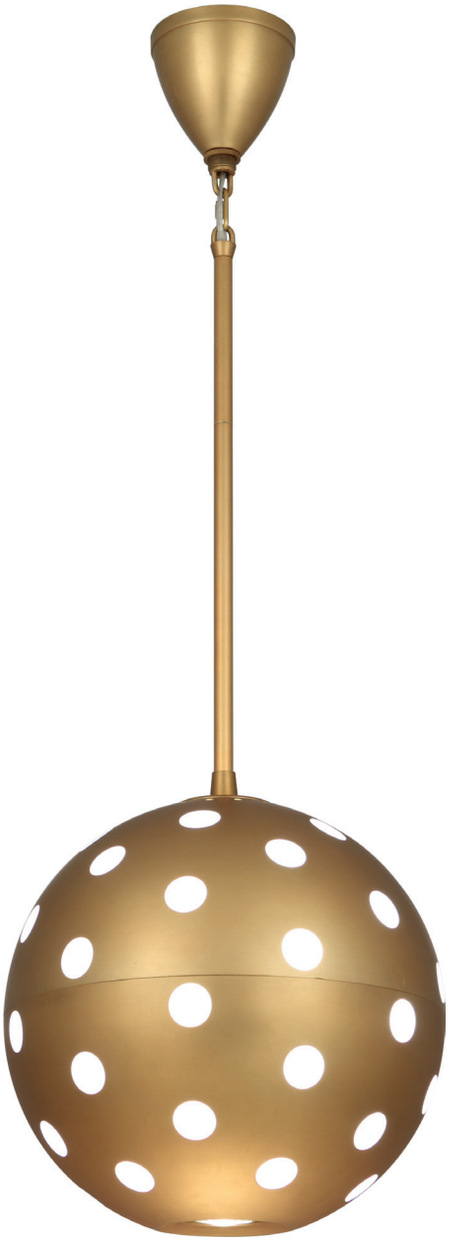

2005



S2005



Z2005

Rico Espinet Nova

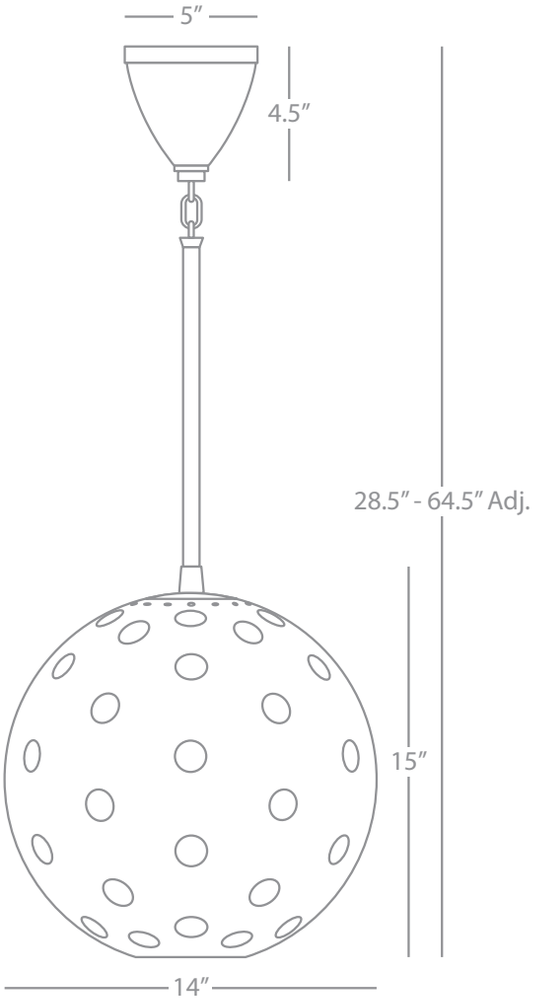

RICO ESPINET NOVA

2005

Pendant

2 - 13W Max.
Bulb Type: CFL, GU24 Base
1 - 35W Max. for Downlight
Bulb Type: PAR16 Halogen, GU10 Base
Downlight Bulb is Included
Direct Wire
Matte Brass Finish
White Acrylic Diffuser Lenses
Susp. Hardware: 1 pc. 5/8" x 6" & 3 pcs. 5/8" x 12" Extensions

FINISH OPTIONS:

S2005 Polished Nickel
Z2005 Deep Patina Bronze

Rico Espinet Caspian



D2003



Z2104



D2104

Z2008

Rico Espinet Caspian

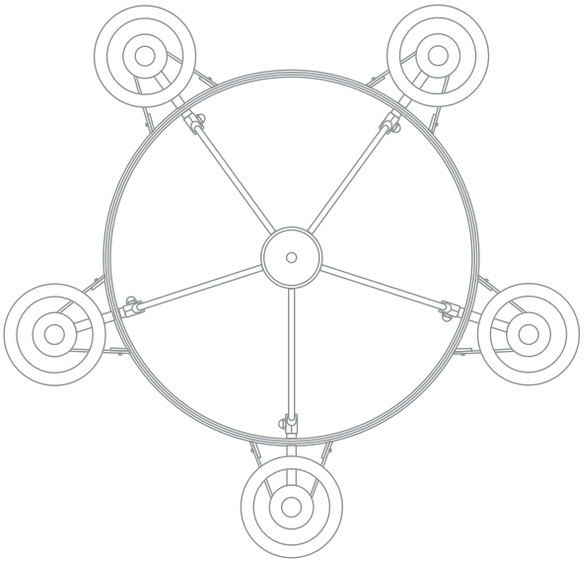

RICO ESPINET CASPIAN

D2104

Wall Sconce

1 - 60W Max.
Bulb Type: B, Candelabra
Switch: On-Off Line Switch
24" Cord Cover/Direct Wire
Dark Antique Nickel Finish
Oyster Linen Shade

FINISH/SHADE OPTIONS:

D2004	Dark Antique Nickel Raw Linen
Z2104	Deep Patina Bronze Raw Linen
Z2114	Deep Patina Bronze Oyster Linen

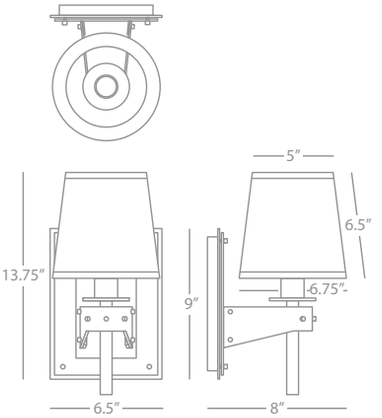

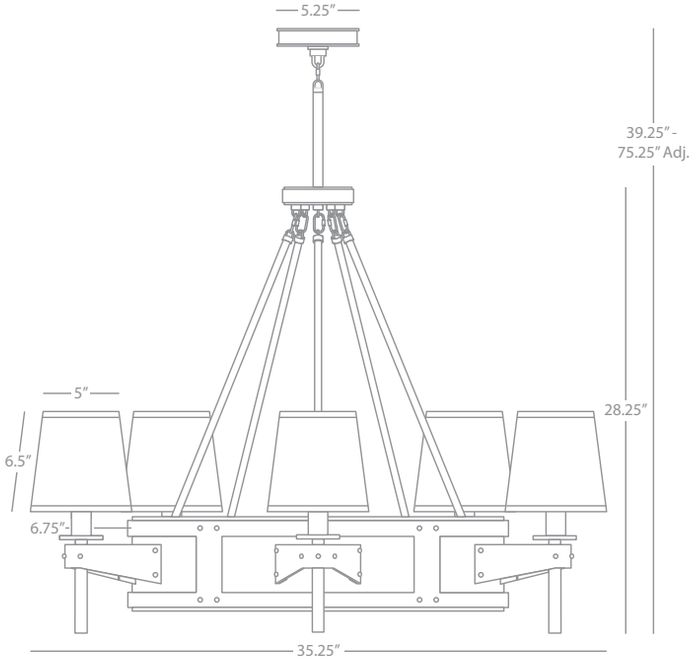

RICO ESPINET CASPIAN

D2003

Chandelier

5 - 60W Max.
Bulb Type: B, Candelabra
Direct Wire
Dark Antique Nickel Finish
Raw Linen Shades
Susp. Hardware: 3 pcs. 5/8" x 12" &
1 pc. 5/8" x 6" Extensions

FINISH/SHADE OPTIONS:

D2103	Dark Antique Nickel Oyster Linen
Z2103	Deep Patina Bronze Raw Linen
Z2113	Deep Patina Bronze Oyster Linen

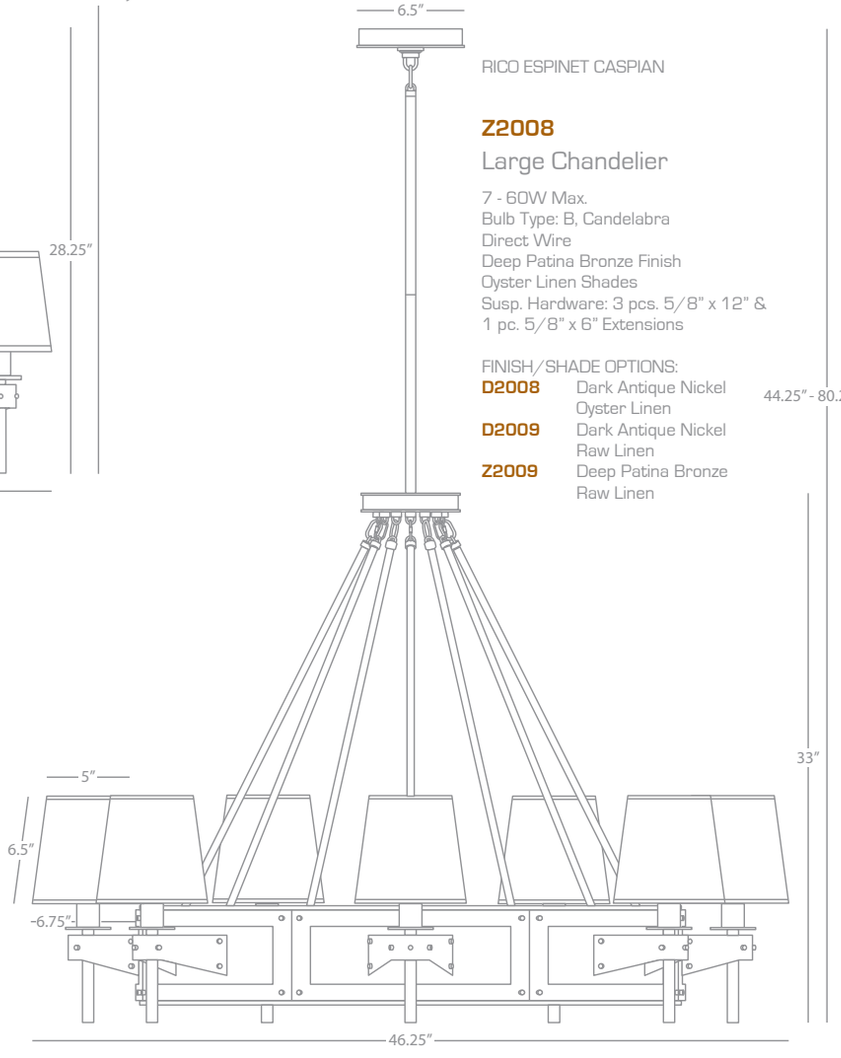

RICO ESPINET CASPIAN

Z2008

Large Chandelier

7 - 60W Max.
Bulb Type: B, Candelabra
Direct Wire
Deep Patina Bronze Finish
Oyster Linen Shades
Susp. Hardware: 3 pcs. 5/8" x 12" &
1 pc. 5/8" x 6" Extensions

FINISH/SHADE OPTIONS:

D2008	Dark Antique Nickel Oyster Linen
D2009	Dark Antique Nickel Raw Linen
Z2009	Deep Patina Bronze Raw Linen

44.25″ - 80.25″ Adj.



Z2118



D2118



S2118



D2117



Z2117

Rico Espinet Caspian

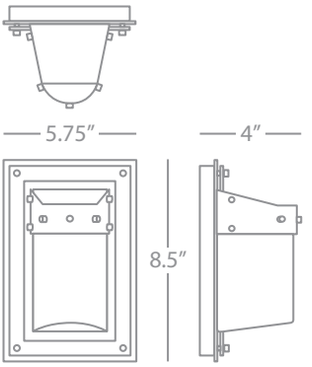

RICO ESPINET CASPIAN

D2118

Wall Sconce

1 - 25W Max.
Bulb Type: 120V G9 Bi-Pin Halogen
Direct Wire only
Dark Antique Nickel Finish
Frosted White Cased Glass Shade
Ships w/ 25W Halogen Bulb Included

FINISH OPTIONS:
S2118 Polished Nickel
Z2118 Deep Patina Bronze

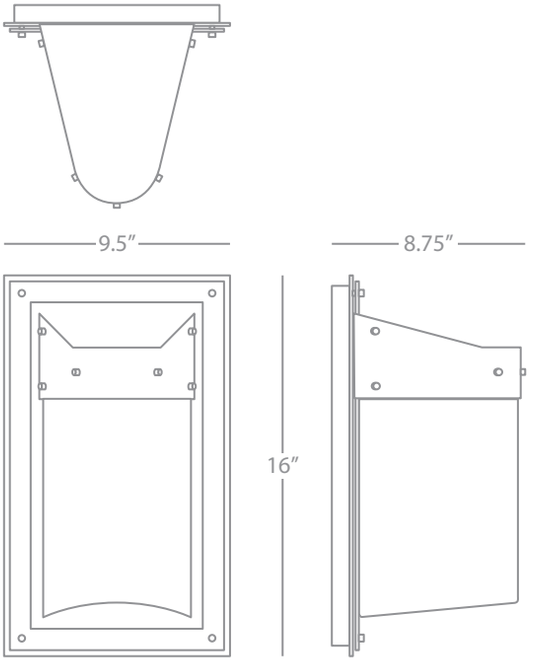

RICO ESPINET CASPIAN

D2117

Outdoor Wall Sconce

1 - 23W Max.
Bulb Type: CFL, GU24 Base
Direct Wire Only
Dark Antique Nickel Finish
Frosted White Cased Glass Shade
UL Rated for Wet Locations
Ships w/ 23W CFL, GU24 Base Bulb Included

FINISH OPTION:
Z2117 Deep Patina Bronze

Rico Espinet Nina



Z2068



Z2058



2043



2069



2040

Rico Espinet Nina

RICO ESPINET NINA

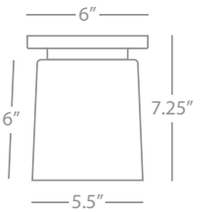

Z2058
Corta Flush Mount

1 - 60W Max.
Bulb Type: B11 Torpedo
Direct Wire Only
Deep Patina Bronze Finish
Frosted White Cased Glass Shade

FINISH OPTION:
2058 Polished Nickel

RICO ESPINET NINA

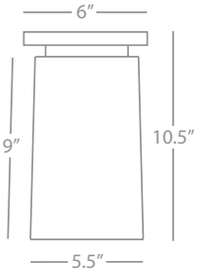

2043
Flush Mount

1 - 100W Max.
Bulb Type: A
Direct Wire Only
Polished Nickel Finish
Frosted White Cased Glass Shade

FINISH OPTION:
Z2043 Deep Patina Bronze

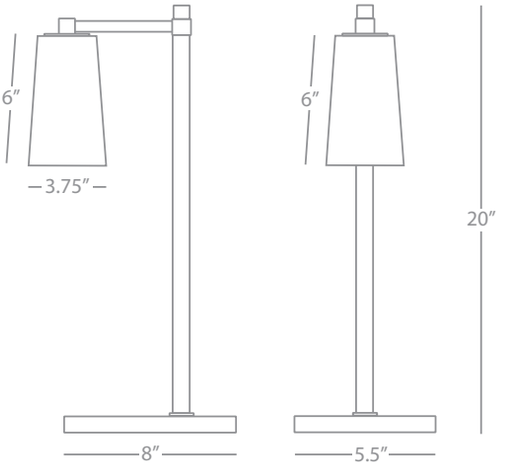

RICO ESPINET NINA

2040
Downbridge Table Lamp

1 - 60W Max.
Bulb Type: B11 Torpedo
Switch: On-Off
Polished Nickel Finish
Frosted White Cased Glass Shade

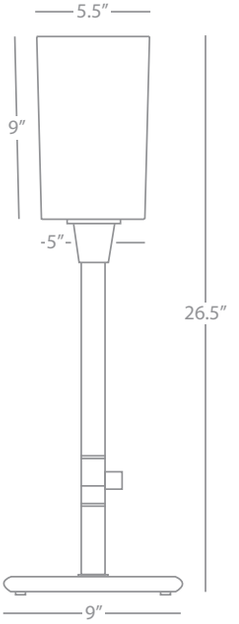

RICO ESPINET NINA

2069
Table Torchiere

1 - 150W Max.
Bulb Type: A
Switch: Full Range Dimmer
Polished Nickel Finish
White Frosted Cased Glass Shade

FINISH OPTION:
Z2069 Deep Patina Bronze

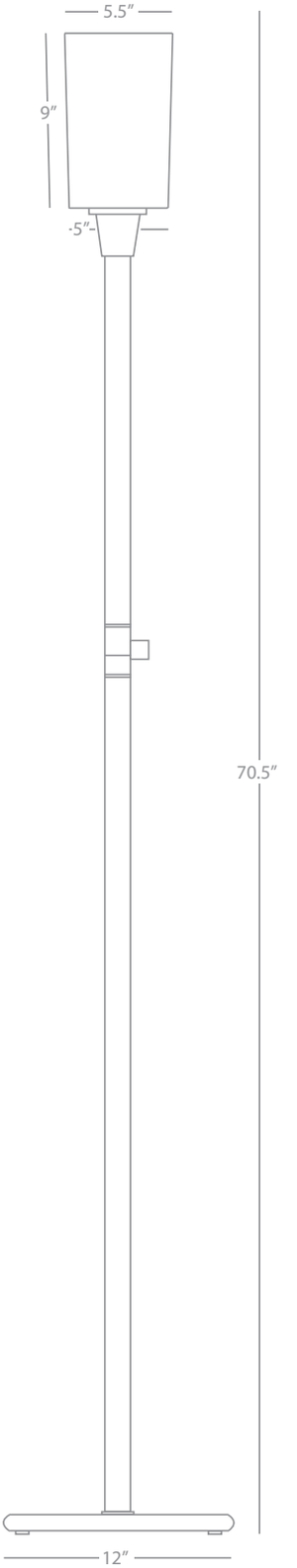

RICO ESPINET NINA

Z2068
Floor Torchiere

1 - 150W Max.
Bulb Type: A
Switch: Full Range Dimmer
Deep Patina Bronze Finish
White Frosted Cased Glass Shade

FINISH OPTION:
2068 Polished Nickel

Rico Espinet Ovo



Z2044



2044

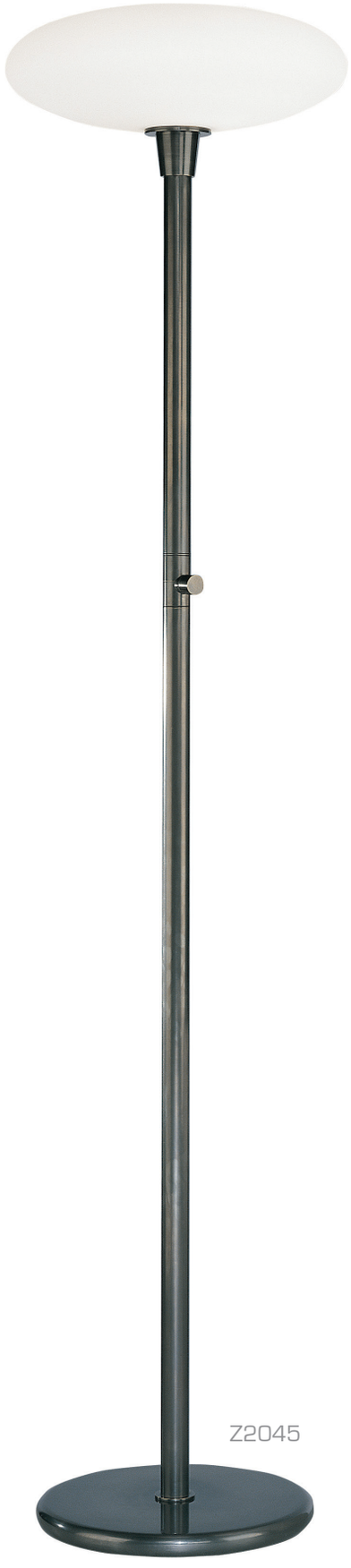

Z2045

Rico Espinet Ovo

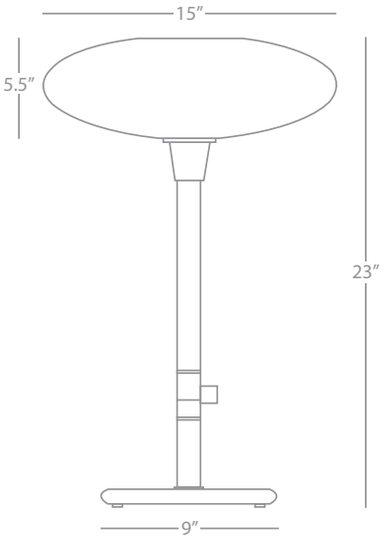

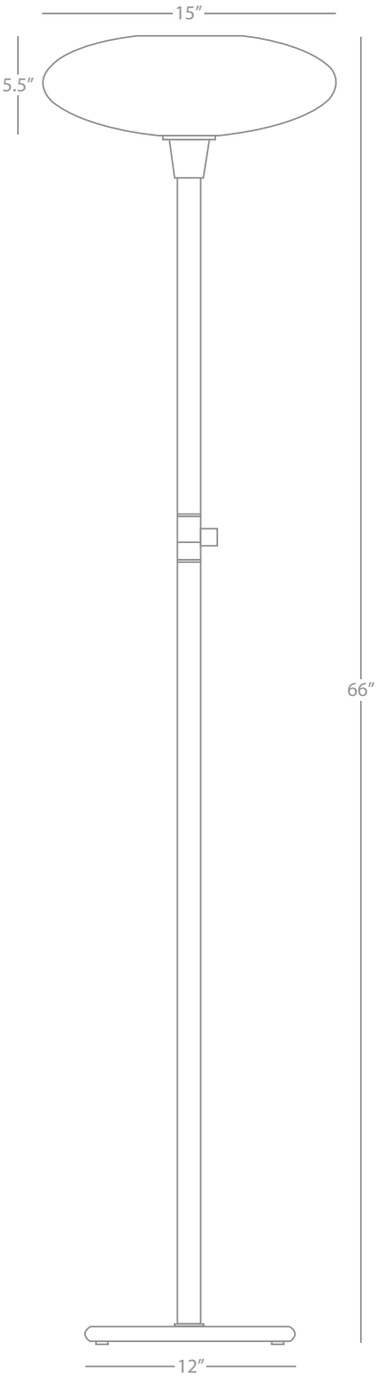

RICO ESPINET OVO

2044

Table Lamp

1 - 150W Max.
Bulb Type: A
Switch: Full Range Dimmer
Polished Nickel Finish
Frosted White Cased Glass Shade

FINISH OPTION:
Z2044 Deep Patina Bronze

RICO ESPINET OVO

Z2045

Floor Torchiere

1 - 150W Max.
Bulb Type: A
Switch: Full Range Dimmer
Deep Patina Bronze
Frosted White Cased Glass Shade

FINISH OPTION:
2045 Polished Nickel

Rico Espinet Buster



Z2057



2055



2804

Rico Espinet Buster

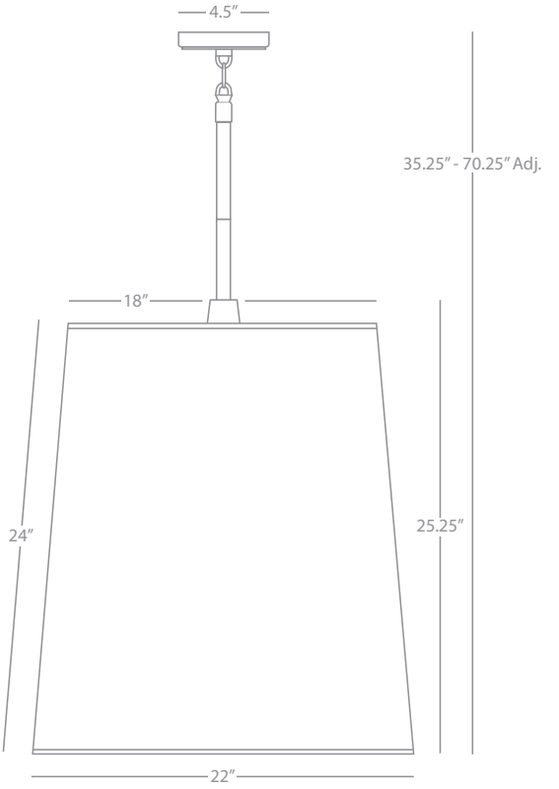

RICO ESPINET BUSTER

2055

Pendant

1 - 200W Max.
Bulb Type: A
Direct Wire
Polished Nickel Finish
Taupe Claiborne Fabric Shade
w/ Self-Fabric Diffuser
Susp. Hardware: 3 pcs. 5/8" x 12" &
1 pc. 5/8" x 6" Extensions

FINISH/SHADE OPTIONS:

2055W	Polished Nickel Fondine Fabric
Z2055	Deep Patina Bronze Muslin Claiborne Fabric
2802	Aged Brass Smoke Gray Fabric
2802W	Aged Brass Fondine Fabric

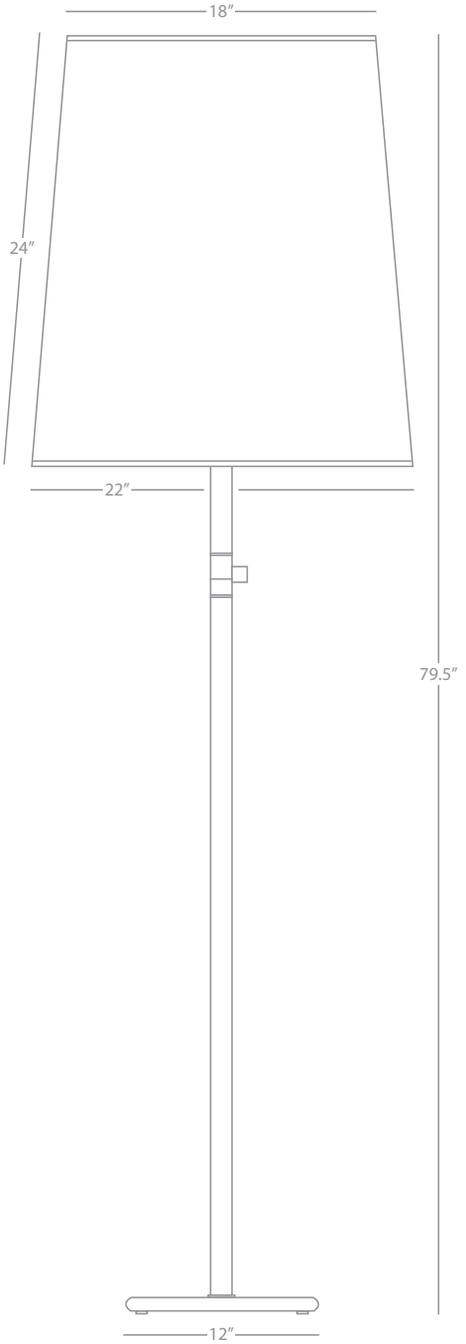

RICO ESPINET BUSTER

2804

Chica Floor Lamp

1 - 150W Max.
Bulb Type: A
Switch: Full Range Dimmer
Aged Brass Finish
Smoke Gray Fabric Shade

FINISH/SHADE OPTIONS:

2080	Polished Nickel Taupe Claiborne Fabric
2080W	Polished Nickel Fondine Fabric
2081	Deep Patina Bronze Muslin Claiborne
2804W	Aged Brass Fondine Fabric

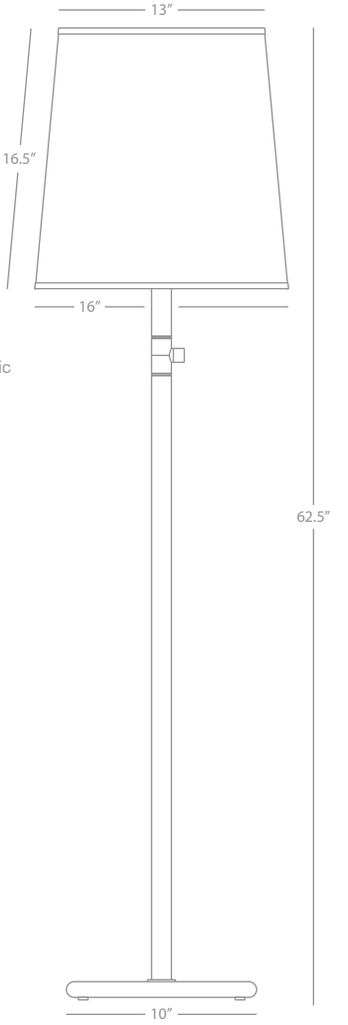

RICO ESPINET BUSTER

Z2057

Floor Lamp

1 - 200W Max.
Bulb Type: A
Switch: Full Range Dimmer
Deep Patina Bronze Finish
Muslin Claiborne Fabric Shade

FINISH/SHADE OPTIONS:

2057	Polished Nickel Taupe Claiborne Fabric
2057W	Polished Nickel Fondine Fabric
2801	Aged Brass Smoke Gray Fabric
2801W	Aged Brass Fondine Fabric

Rico Espinet Buster



2083



2803W



2082



2056W



2800

Rico Espinet Buster

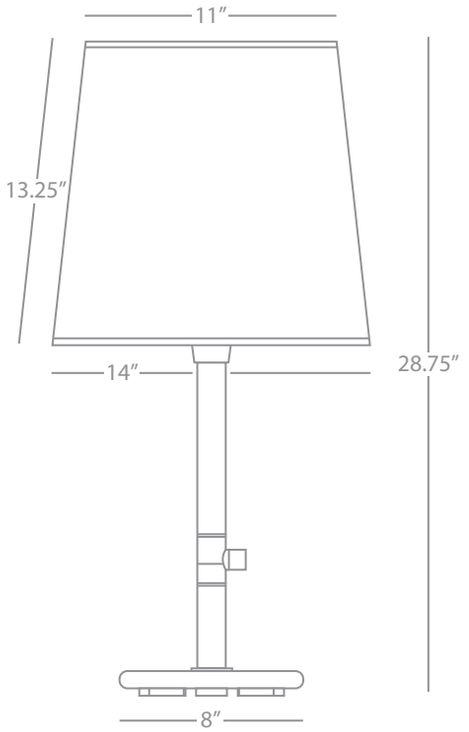

RICO ESPINET BUSTER

2083

Chica Table Lamp

1 - 150W Max.
Bulb Type: A
Switch: Full Range Dimmer
Deep Patina Bronze Finish
Muslin Claiborne Fabric Shade

FINISH/SHADE OPTIONS:

2082	Polished Nickel Taupe Claiborne Fabric
2082W	Polished Nickel Fondine Fabric
2803	Aged Brass Smoke Gray Fabric
2803W	Aged Brass Fondine Fabric

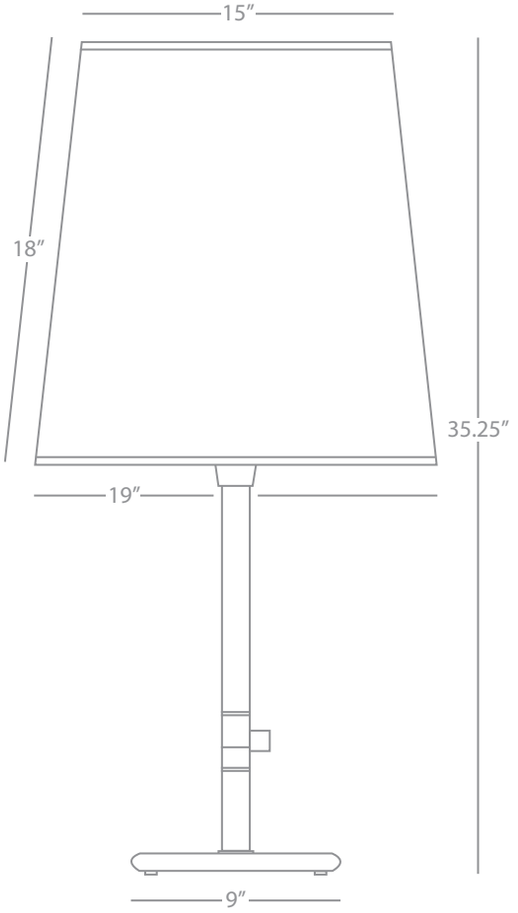

RICO ESPINET BUSTER

2056W

Table Lamp

1 - 200W Max.
Bulb Type: A
Switch: Full Range Dimmer
Polished Nickel Finish
Fondine Fabric Shade

FINISH/SHADE OPTIONS:

2056	Polished Nickel Taupe Claiborne Fabric
2800	Aged Brass Smoke Gray Fabric
2800W	Aged Brass Fondine Fabric

Rico Espinet Candelaria



B2090



Z2102



B2099



S2091

Rico Espinet Candelaria

RICO ESPINET CANDELARIA

B2099
2-Tier Chandelier

30 - 40W Max.
Bulb Type: A
Direct Wire Only
Brushed Nickel Finish
Susp. Hardware: 3 pcs. 5/8" x 12"
& 1 pc. 5/8" x 6" Extensions

Photographed with Historical Bulbs
SOLD SEPARATELY (Style # BUL30)
See Page 202

FINISH OPTIONS:
S2099 Polished Nickel
Z2099 Deep Patina Bronze

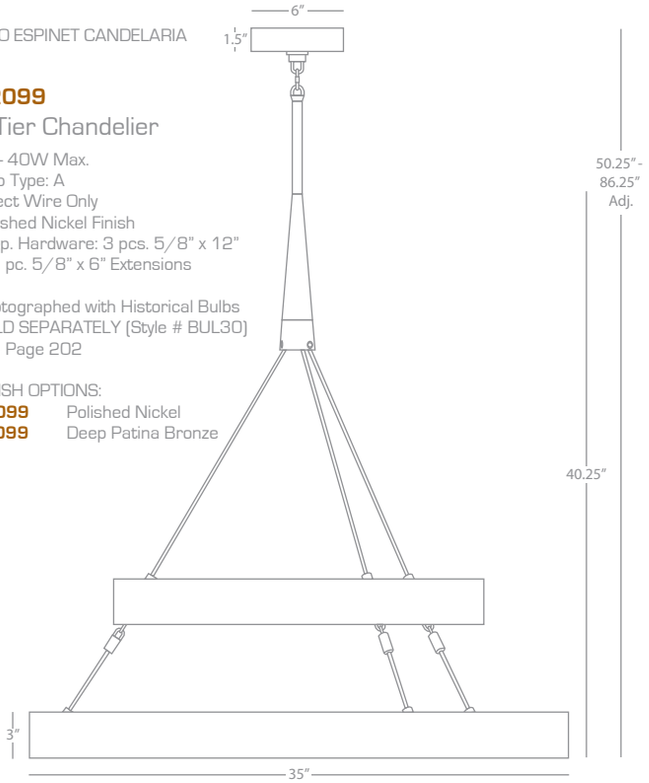

RICO ESPINET CANDELARIA

Z2102
Small Chandelier

9 - 40W Max.
Bulb Type: A
Direct Wire
Deep Patina Bronze Finish
Susp. Hardware: 3 pcs. 5/8" x 12"
& 1 pc. 5/8" x 6" Extensions

Photographed with Historical Bulbs
SOLD SEPARATELY (Style # BUL09)
See Page 202

FINISH OPTIONS:
B2102 Brushed Nickel
S2102 Polished Nickel

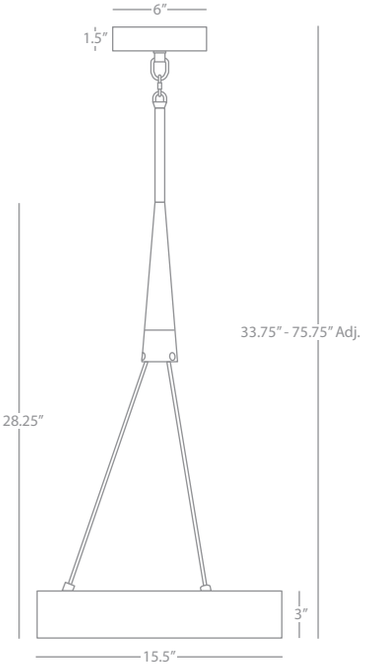

RICO ESPINET CANDELARIA

B2090
Medium Chandelier

12 - 40W Max.
Bulb Type: A
Direct Wire Only
Brushed Nickel Finish
Susp. Hardware: 3 pcs. 5/8" x 12"
& 1 pc. 5/8" x 6" Extensions

Available with Historical Bulbs
SOLD SEPARATELY (Style # BUL12)
See Page 202

FINISH OPTIONS:
S2090 Polished Nickel
Z2090 Deep Patina Bronze

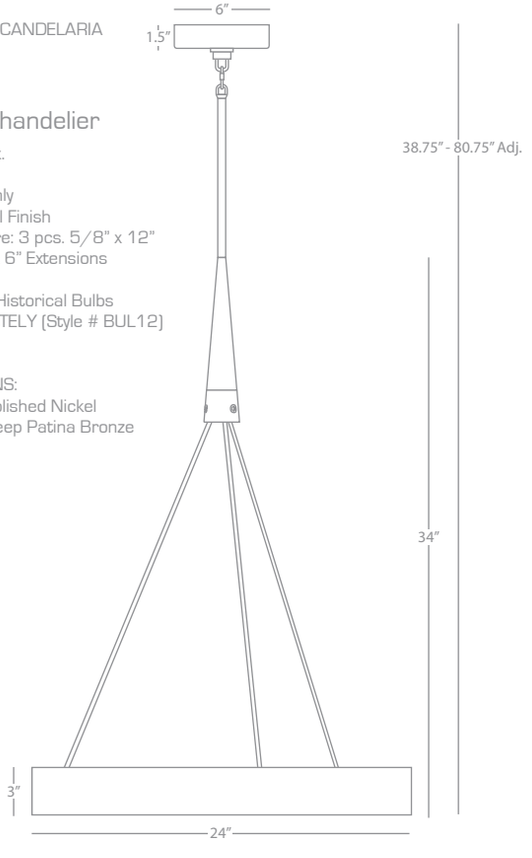

RICO ESPINET CANDELARIA

S2091
Large Chandelier

18 - 40W Max.
Bulb Type: A
Direct Wire Only
Polished Nickel Finish
Susp. Hardware: 3 pcs. 5/8" x 12"
& 1 pc. 5/8" x 6" Extensions

Photographed with Historical Bulbs
SOLD SEPARATELY (Style # BUL18)
See Page 202

FINISH OPTIONS:
B2091 Brushed Nickel
Z2091 Deep Patina Bronze

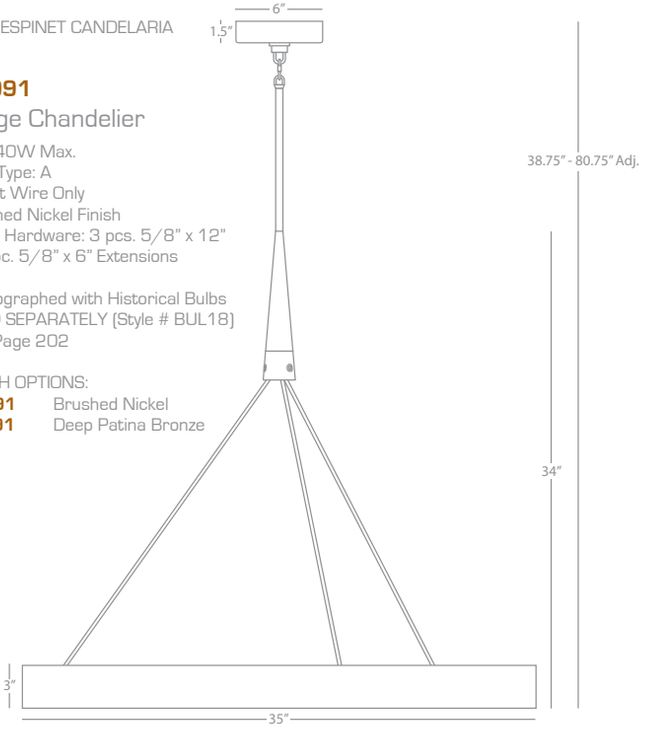



Z2098



B2097

Z2096

Rico Espinet Miles

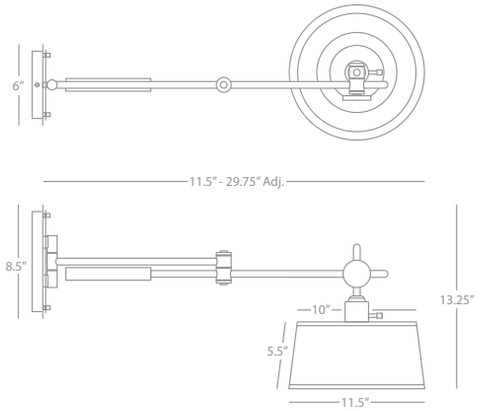

RICO ESPINET MILES

Z2098

Wall Mounted Boom Lamp

1 - 100W Max.
Bulb Type: A
Switch: Hi-Lo Dimming
24" Cord Cover/Direct Wire
Deep Patina Bronze Finish
Open Weave Natural Linen Shade w/ Fabric Diffuser

FINISH/SHADE OPTION:
B2098 Brushed Nickel Finish
Concrete Painted Finish over Iron Base
Open Weave White Linen Shade

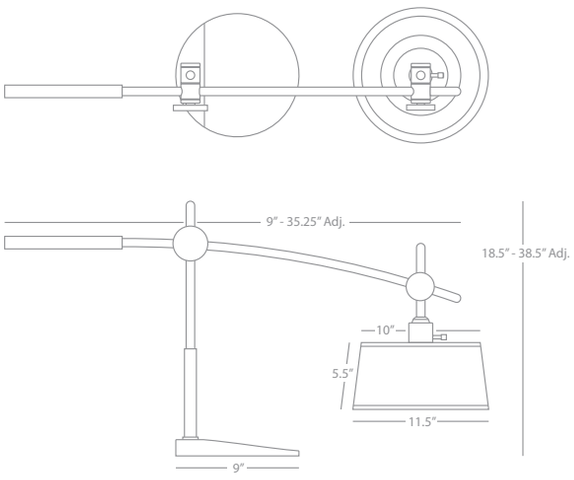

RICO ESPINET MILES

Z2096

Adjustable Boom Table Lamp

1 - 100W Max.
Bulb Type: A
Switch: Hi-Lo Dimming
Deep Patina Bronze Finish
Electrochemical Phosphatized Iron Base
Open Weave Heather Linen Shade w/ Bottom Diffuser

FINISH/SHADE OPTION:
B2096 Brushed Nickel Finish
Concrete Painted Finish over Iron Base
Open Weave White Linen Shade

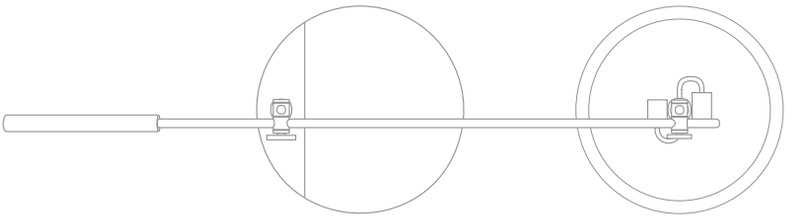

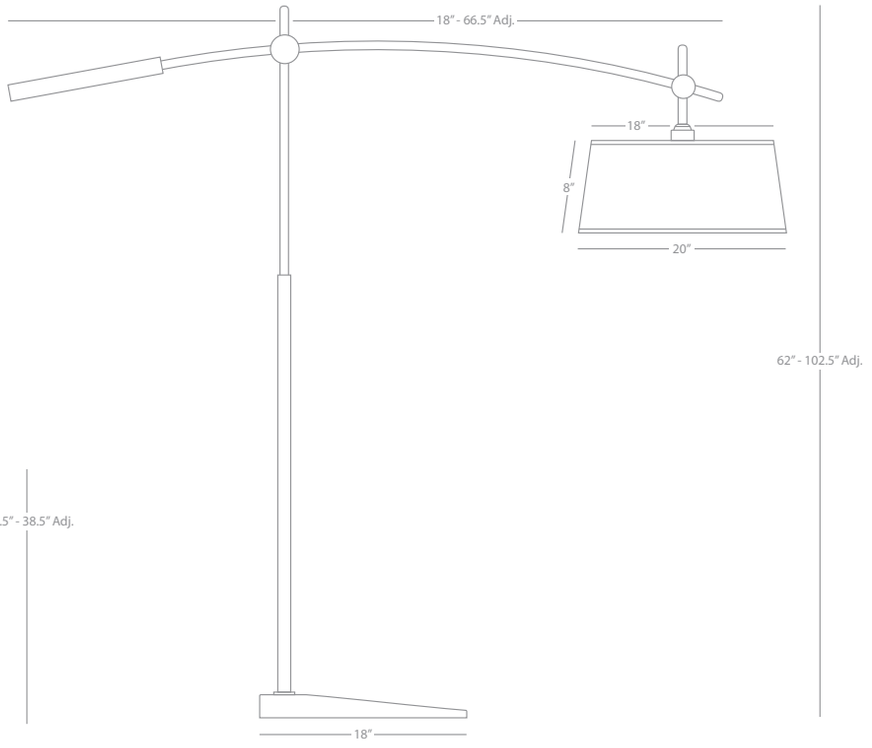

RICO ESPINET MILES

B2097

Adjustable Boom Floor Lamp

2 - 100W Max.
Bulb Type: A
Switch: On-Off Foot Switch
Brushed Nickel Finish
Concrete Painted Finish over Iron Base
Open Weave White Linen Shade w/ Bottom Diffuser

FINISH/SHADE OPTION:
Z2097 Deep Patina Bronze Finish
Electrochemical Phosphatized Iron Base
Open Weave Heather Linen Shade

Rico Espinet Candela



Z2101



B2100

Rico Espinet Candela

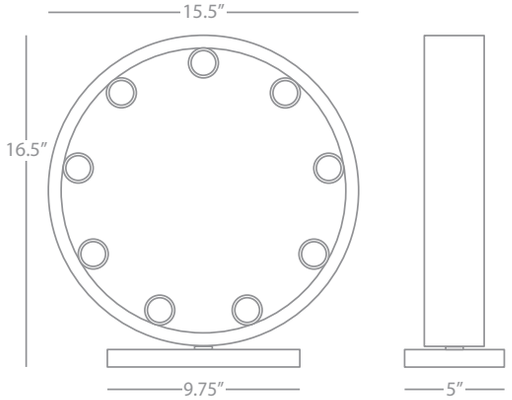

RICO ESPINET CANDELA

B2100
Table Lamp

9 - 60W Max.
Bulb Type: A
Switch: Full Range Dimmer Line Switch
Satin Nickel Finish

FINISH OPTION:
Z2100 Deep Patina Bronze

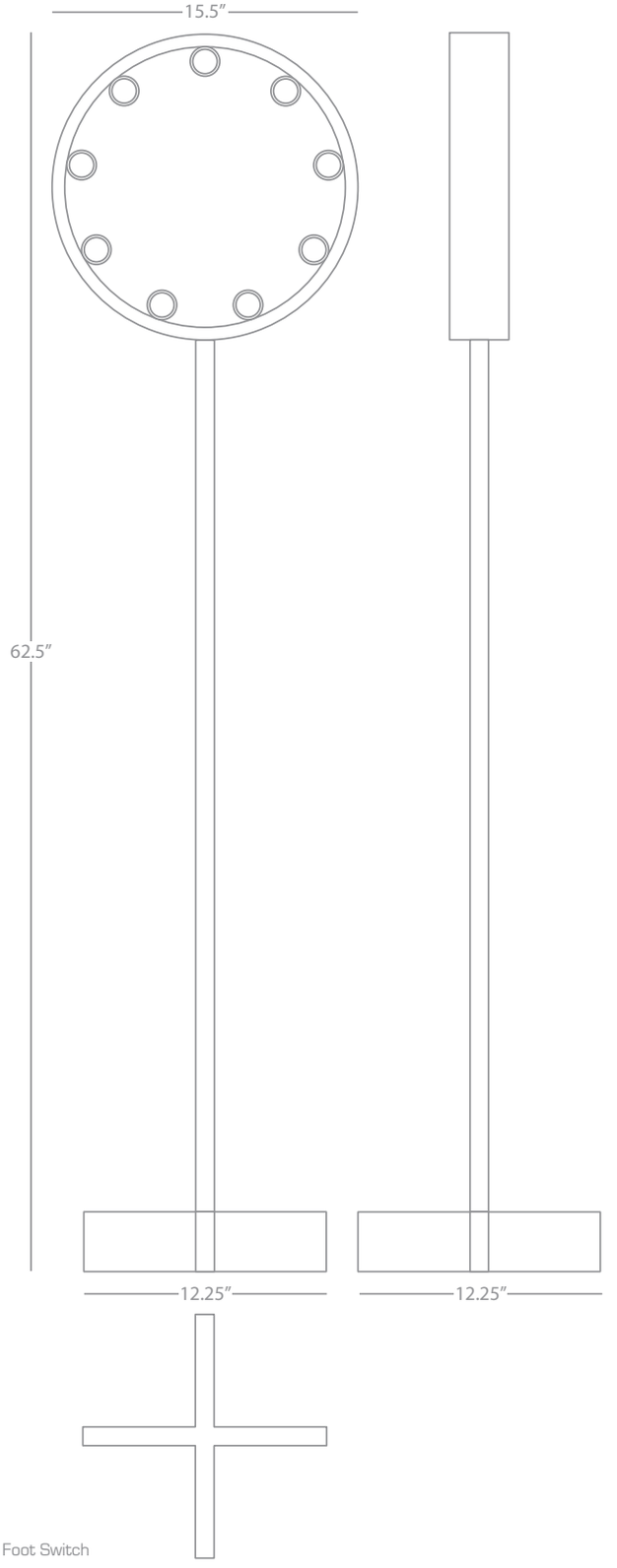

RICO ESPINET CANDELA

Z2101
Floor Lamp

9 - 60W Max.
Bulb Type: A
Switch: Full Range Dimmer Foot Switch
Deep Patina Bronze Finish

FINISH OPTION:
B2101 Satin Nickel

Rico Espinet Sawyer



Z2110



P2111

Rico Espinet Sawyer

RICO ESPINET SAWYER

P2111

Table Lamp

1 - 60W Max.
Bulb Type: A
Switch: On-Off Line Switch
Patina Nickel Finish
Adjustable Metal Shade

FINISH OPTION:
Z2111 Deep Patina Bronze

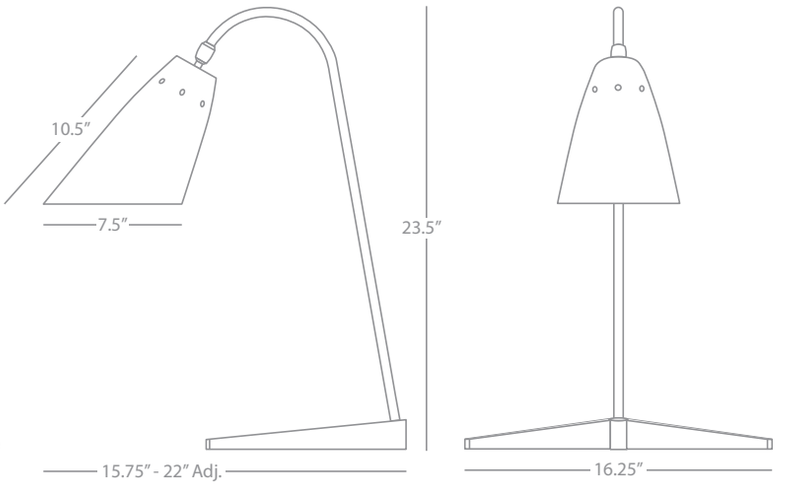

RICO ESPINET SAWYER

Z2110

Floor Lamp

1 - 100W Max.
Bulb Type: A
Switch: Full Range Dimmer Foot Switch
Deep Patina Bronze Finish
Adjustable Metal Shade

FINISH OPTION:
P2110 Patina Nickel

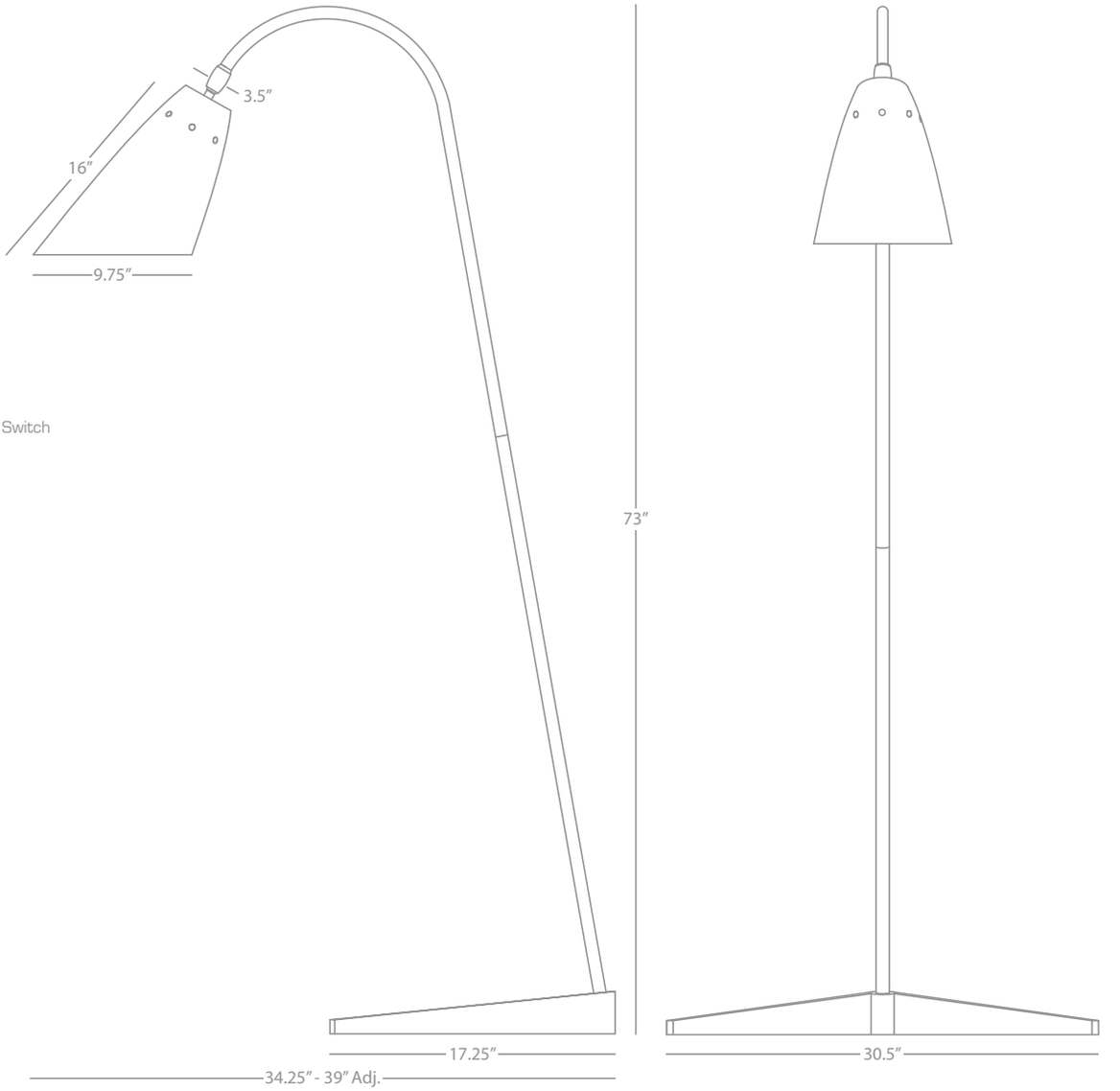



P2112



Z2112

Rico Espinet Sawyer

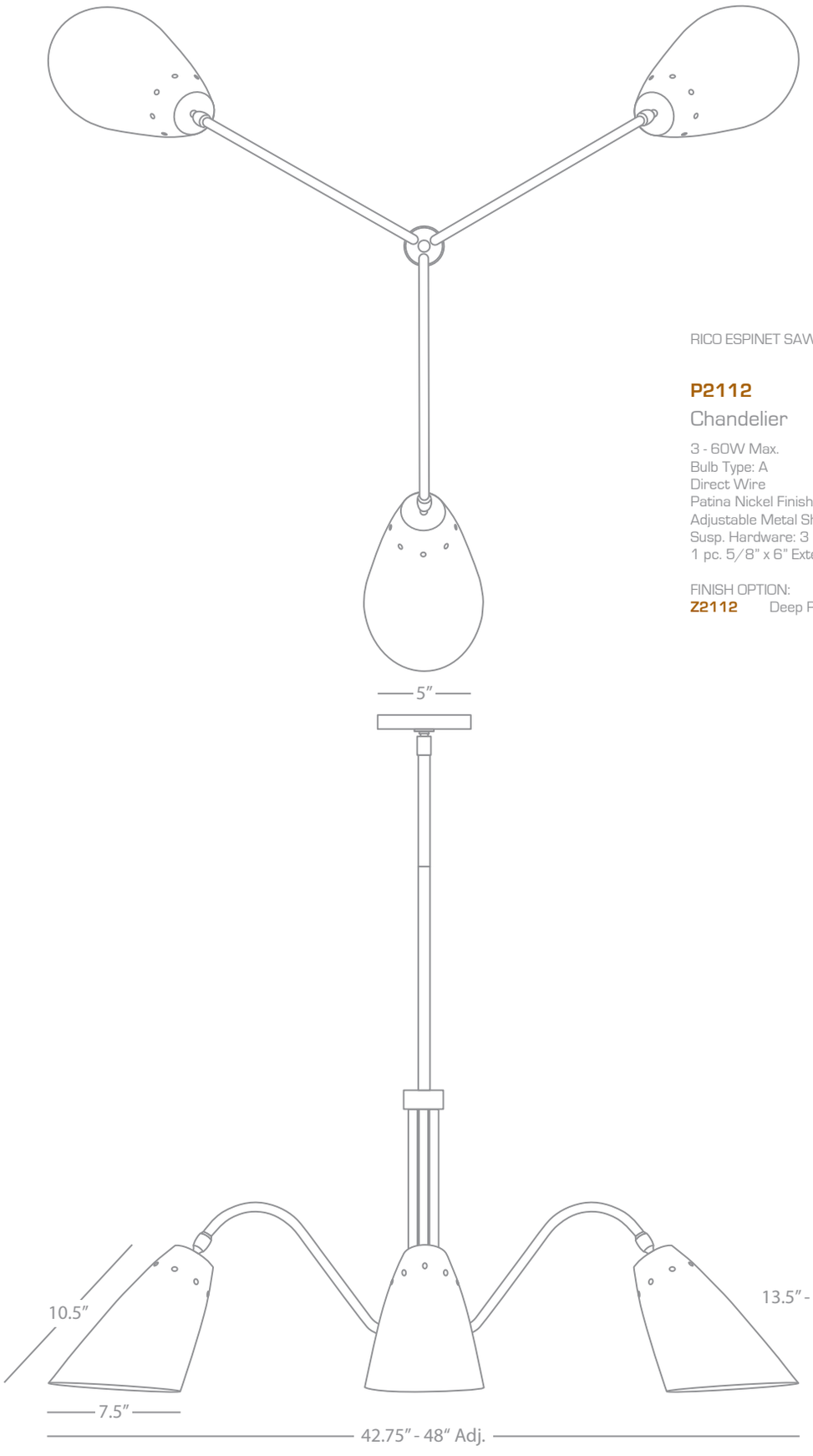

RICO ESPINET SAWYER

P2112

Chandelier

3 - 60W Max.
Bulb Type: A
Direct Wire
Patina Nickel Finish
Adjustable Metal Shades
Susp. Hardware: 3 pcs. 5/8" x 12" &
1 pc. 5/8" x 6" Extensions

FINISH OPTION:
Z2112 Deep Patina Bronze

Rico Espinet Vaux



2116



2115

Rico Espinet Vaux

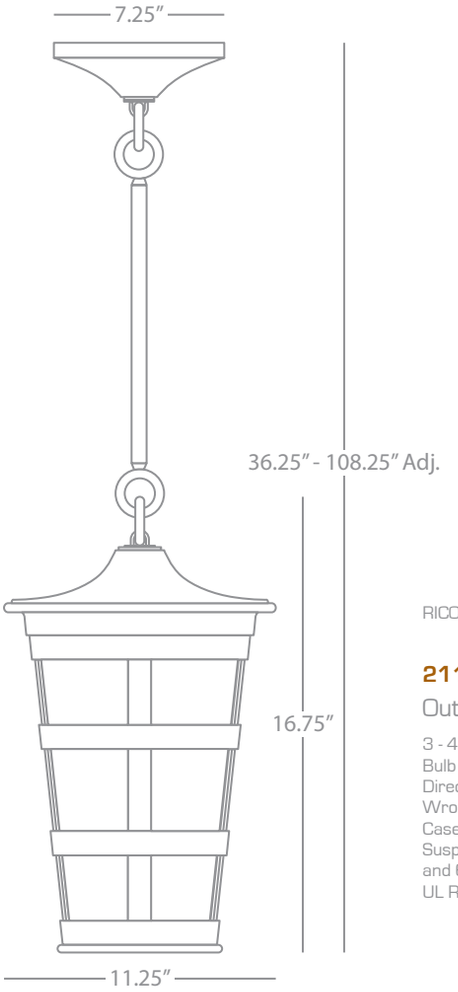

RICO ESPINET VAUX

2116

Outdoor Pendant

3 - 40W Max.
Bulb Type: B, Medium Base
Direct Wire
Wrought Iron Finish
Cased White Glass Shade
Susp. Hardware: 1 pc. 5/8" x 6" Extensions
and 6 Ft. of Chain
UL Rated for Wet Locations

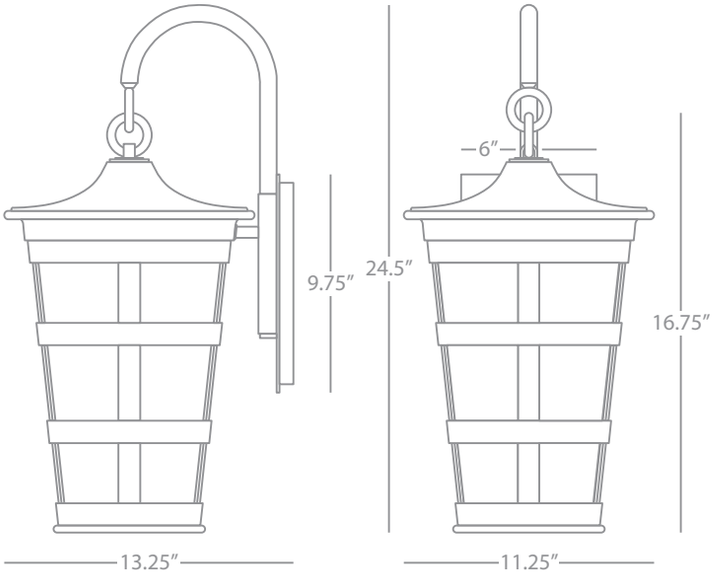

RICO ESPINET VAUX

2115

Outdoor Sconce

3 - 40W Max.
Bulb Type: B, Medium Base
Direct Wire Only
Wrought Iron Finish
Cased White Glass Shade
UL Rated for Wet Locations

Rico Espinet Shinto



2171



2170

Rico Espinet Shinto

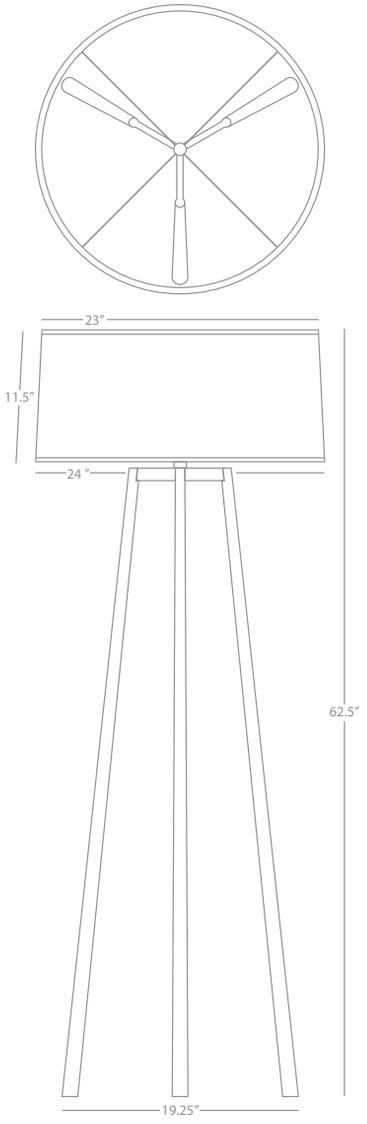

RICO ESPINET SHINTO

2171

Tripod Floor Lamp

1 - 150W Max.
Bulb Type: A
Switch: 3-Way
Wrought Iron Finish
Ascot White Fabric Shade w/
Black Contrast Trim

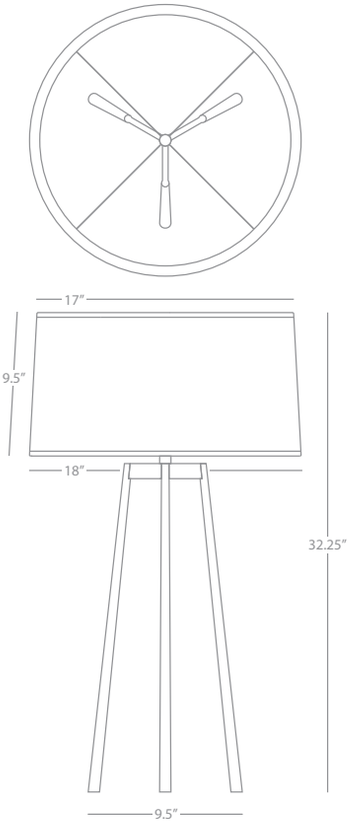

RICO ESPINET SHINTO

2170

Tripod Table Lamp

1 - 150W Max.
Bulb Type: A
Switch: 3-Way
Wrought Iron Finish
Ascot White Fabric Shade w/
Black Contrast Trim



JONATHAN ADLER

Jonathan Adler launched his first ceramic collection in 1994 at Barneys New York. Five years later he expanded into home furnishings, opening his first namesake boutique in Manhattan.

Jonathan Adler now has over 25 stores worldwide, a thriving e-commerce site, and a wholesale business boasting over 1,000 locations globally.
While remaining committed to ceramic design, Jonathan has now grown far beyond the potter's wheel to become an internationally recognized design brand offering decorative objects, tabletop collections, bedding, bath accessories, gifts, candles, furniture, rugs, pillows, lighting, and most recently handbags.

Jonathan's creativity is fueled by various sources of inspiration: Mid-century modern, art and global pop culture combine to create the signature Adler aesthetic. The company prides itself on its ability to combine a serious design philosophy with a colorful sense of optimism. The guiding motto, "If your heirs won't fight over it, we won't make it." reflects Jonathan's commitment to impeccable craftsmanship and irreverent luxury.



JONATHAN ADLER



779



765



Z639



795



S651X



S652



649B



Z649

Jonathan Adler Meurice

JONATHAN ADLER MEURICE

649B
Square Table Lamp

1 - 150W Max.
Bulb Type: A
Switch: Full Range Dimmer
Antique Natural Brass Finish
Black Parchment Shade w/ Gold Tortoise Lining
Acrylic Diffuser

FINISH/SHADE OPTIONS:

649	Antique Brass Finish Off-White Linen Shade
S649	Polished Nickel Off-White Linen Shade
S649X	Polished Nickel White Parchment Shade w/ Silver Tortoise Lining
Z649	Deep Patina Bronze Off-White Linen Shade
Z649B	Deep Patina Bronze Black Parchment Shade w/ Gold Tortoise Lining

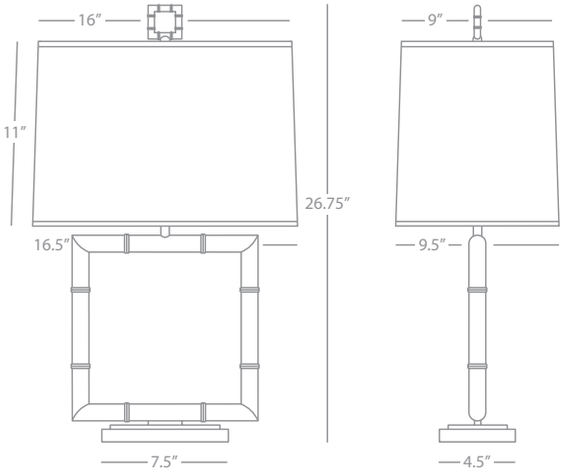

JONATHAN ADLER MEURICE

S651X
Club Floor Lamp

1 - 150W Max.
Bulb Type: A
Switch: Full Range Dimmer
Polished Nickel Finish
White Parchment Shade w/
Silver Tortoise Lining

FINISH/SHADE OPTIONS:

651	Antique Natural Brass Off-White Linen Shade w/ Rolled Edge Hem
651B	Antique Natural Brass Black Parchment Shade w/ Gold Tortoise Lining
S651	Polished Nickel Off-White Linen Shade w/Rolled Edge Hem

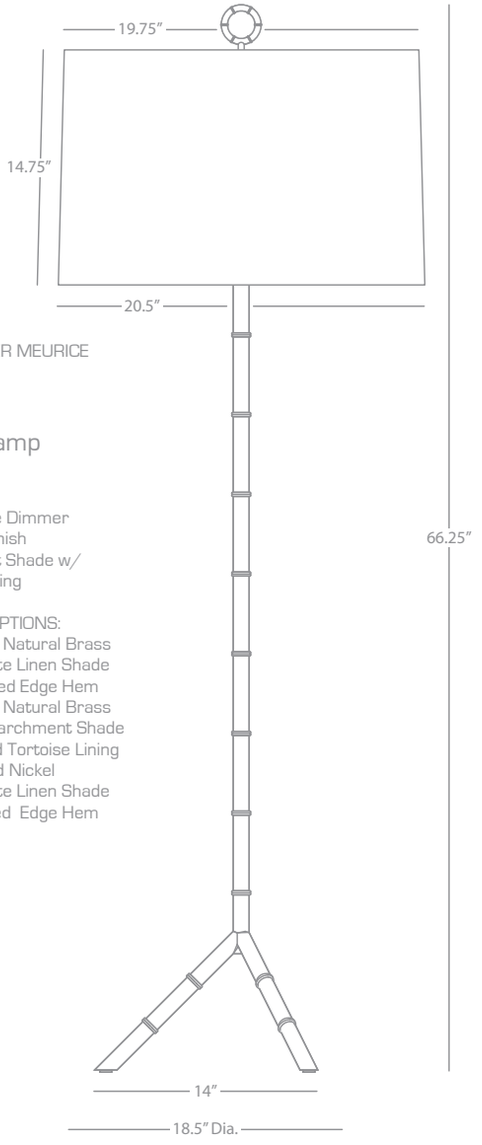

JONATHAN ADLER MEURICE

S652
Tray Table Floor Lamp

1 - 150W Max.
Bulb Type: A
Switch: Full Range Dimmer
Polished Nickel Finish
19.75" x 3/8" Clear Tempered Glass Tray
Off-White Linen Shade w/ Rolled Edge Hem

SHADE OPTION:

S652X	White Parchment Shade w/ Silver Tortoise Lining

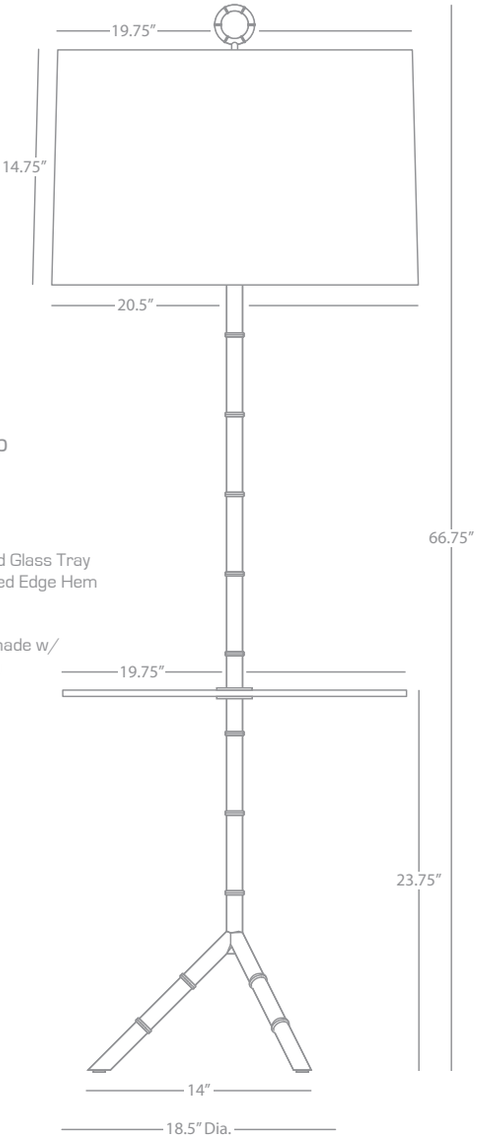



S654



S653



Z657



654

Jonathan Adler Meurice

JONATHAN ADLER MEURICE

Z657
Large Pendant

3 - 100W Max.
Bulb Type: A
Direct Wire Only
Deep Patina Bronze Finish
Off-White Linen Shade w/ Rolled Edge Hem
24" Acrylic Diffuser
Susp. Hardware: 3 Ft. Chain

FINISH OPTIONS:
657 Natural Antique Brass
S657 Polished Nickel

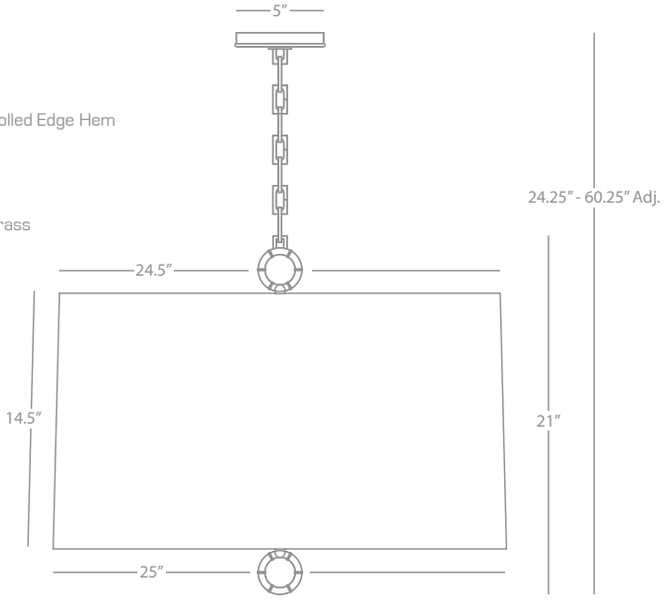

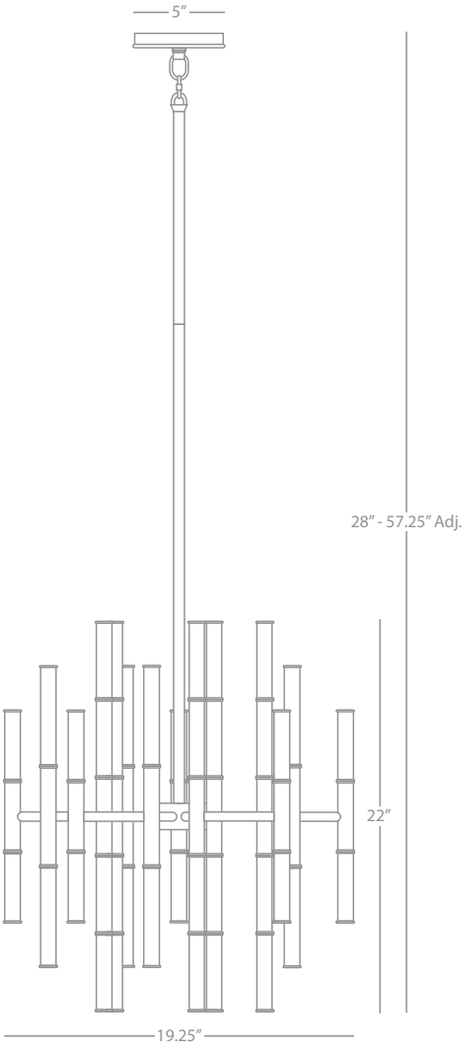

JONATHAN ADLER MEURICE

S653
Small Pendant

2 - 100W Max.
Bulb Type: A
Direct Wire Only
Polished Nickel Finish
Off-White Linen Shade w/ Rolled Edge Hem
17" Acrylic Diffuser
Susp. Hardware: 3 Ft. Chain

FINISH OPTIONS:
653 Natural Antique Brass
Z653 Deep Patina Bronze

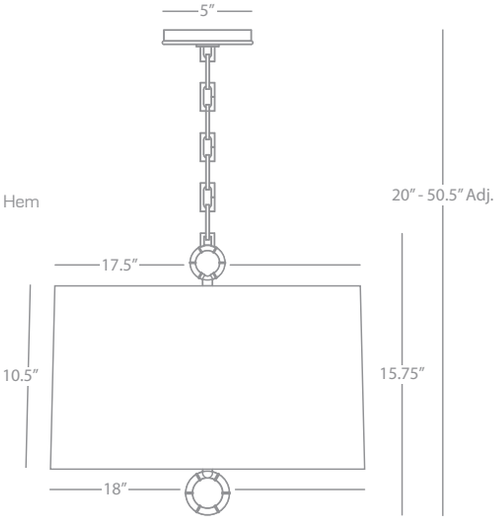

JONATHAN ADLER MEURICE

654
30-Light Chandelier

30 - 25W Max.
Bulb Type: G16.5 Candelabra
Direct Wire Only
Antique Natural Brass Finish
Susp. Hardware: 3 pcs. 5/8" x 12"
& 1 pc. 5/8" x 6" Extensions

FINISH OPTIONS:
S654 Polished Nickel
Z654 Deep Patina Bronze



Z647



S656



S658



659

Jonathan Adler Meurice

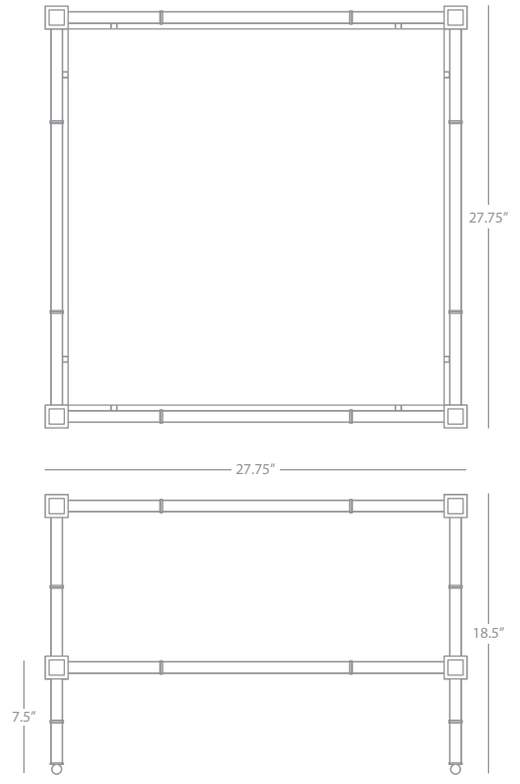

JONATHAN ADLER MEURICE

S658

2-Tier Table

Polished Nickel Finish
Clear Tempered Glass Table Top and Shelf

FINISH OPTION:
658 Antique Natural Brass

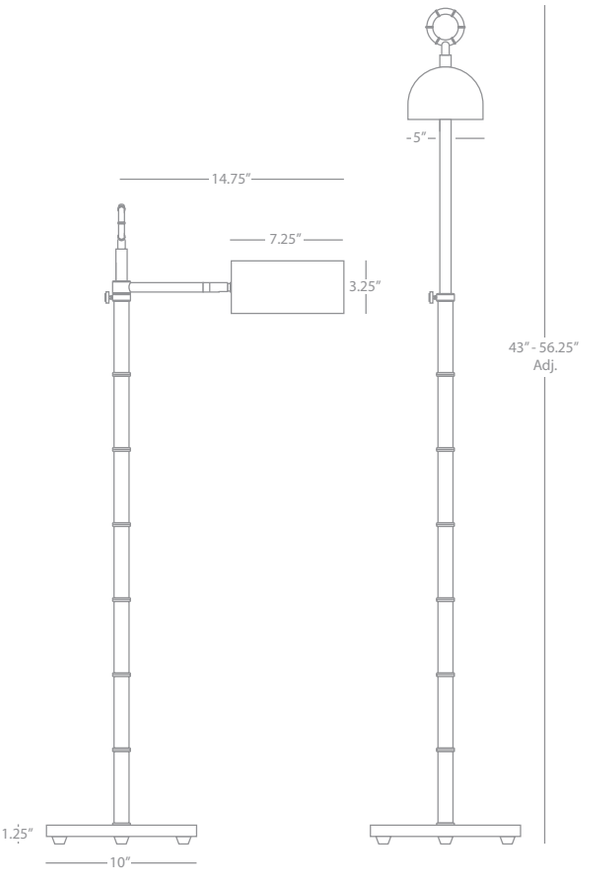

JONATHAN ADLER MEURICE

Z647

Adjustable Pharmacy Floor Lamp

1 - 60W Max.
Bulb Type: A
Switch: Full Range Foot Dimmer
Deep Patina Bronze Finish
Metal Shade

FINISH OPTIONS:
647 Antique Natural Brass
S647 Polished Nickel

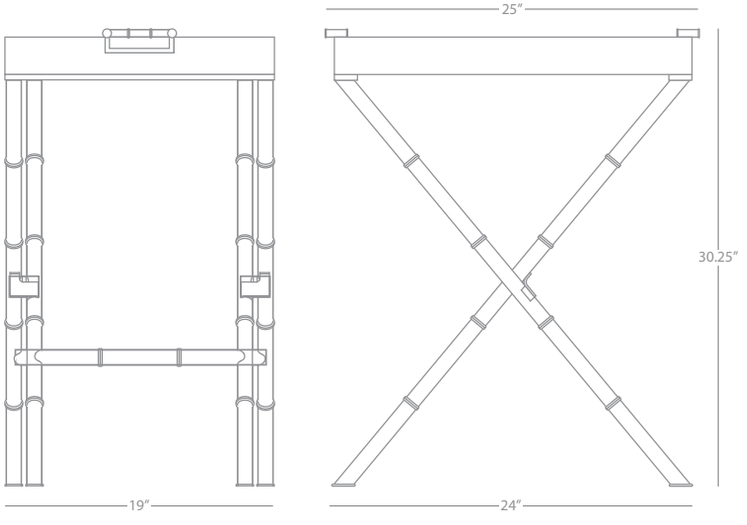

JONATHAN ADLER MEURICE

659

Butler Tray Table

White Lacquered Tray w/ Antique Natural Brass Accents

FINISH OPTION:
S659 Polished Nickel

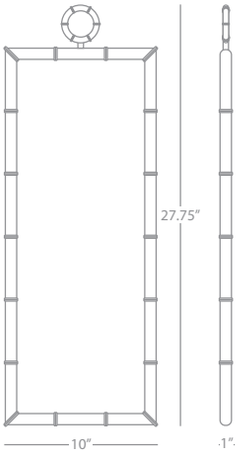

JONATHAN ADLER MEURICE

S656

Mirror

Polished Nickel Finish



686



Z686



S687

Jonathan Adler Meurice

JONATHAN ADLER MEURICE

686

5-Arm Sconce

10 - 25W Max.
Bulb Type: G16.5 Candelabra
24" Cord Cover/Direct Wire
Antique Brass Finish

FINISH OPTIONS:
S686 Polished Nickel
Z686 Deep Patina Bronze

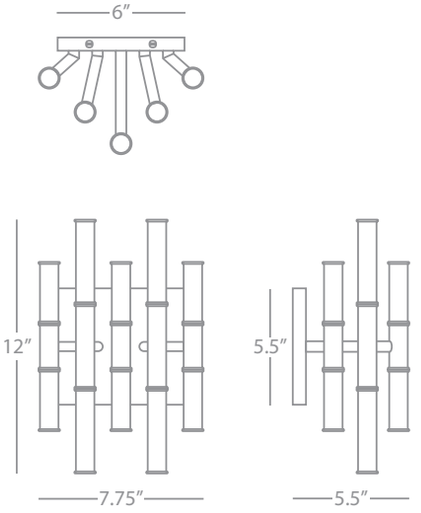

JONATHAN ADLER MEURICE

S687

Rectangular Chandelier

42 - 25W Max.
Bulb Type: G16.5 Candelabra
Direct Wire Only
Polished Nickel Finish
Susp. Hardware: 6 pcs. 5/8" x 12" &
2 pcs. 5/8" x 6" Extensions

FINISH OPTIONS:
687 Antique Brass
Z687 Deep Patina Bronze

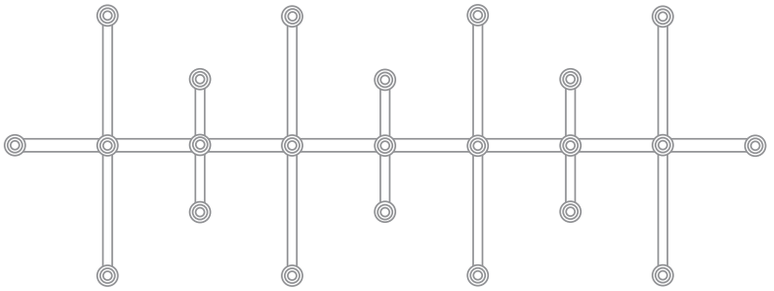

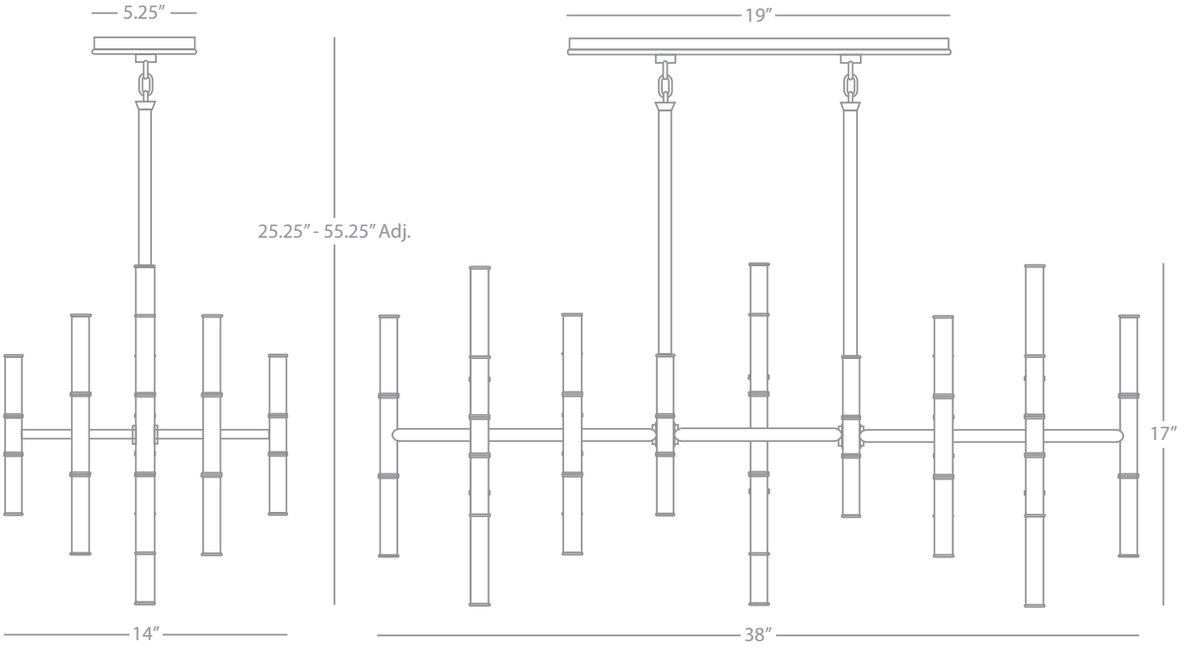



689



S689



Z689



688



S688



Z688

Jonathan Adler Meurice

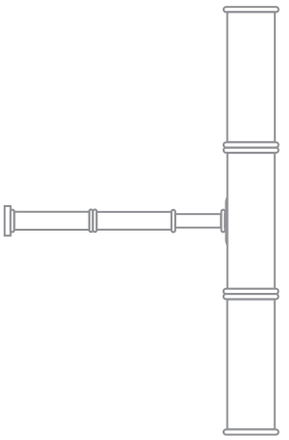

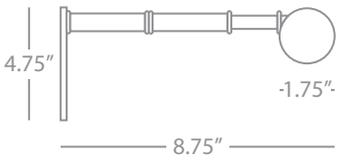

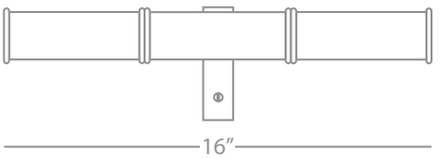

JONATHAN ADLER MEURICE

688

Picture Light

1 - 12W Max. LED Unit
(100W Incadescent Equivalent)
Bulb Type: LED, Included (Non Replacable)
LED Color Temp: 3000, CRI: 70
Switch: On-Off Line Switch
Antique Brass Finish
Matching Metal Shade
Frosted Acrylic Diffuser

FINISH OPTIONS:

S688 Polished Nickel
Z688 Deep Patina Bronze

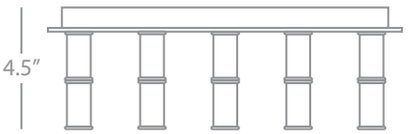

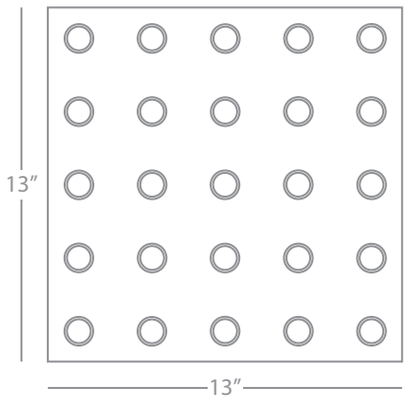

JONATHAN ADLER MEURICE

689

25-Light Flush Mount

25 - 15W Max.
Bulb Type: G16.5, Candelabra Base
Direct Wire Only
Antique Brass Finish

FINISH OPTIONS:

S689 Polished Nickel
Z689 Deep Patina Bronze



S761



Z762



S760

Jonathan Adler Meurice

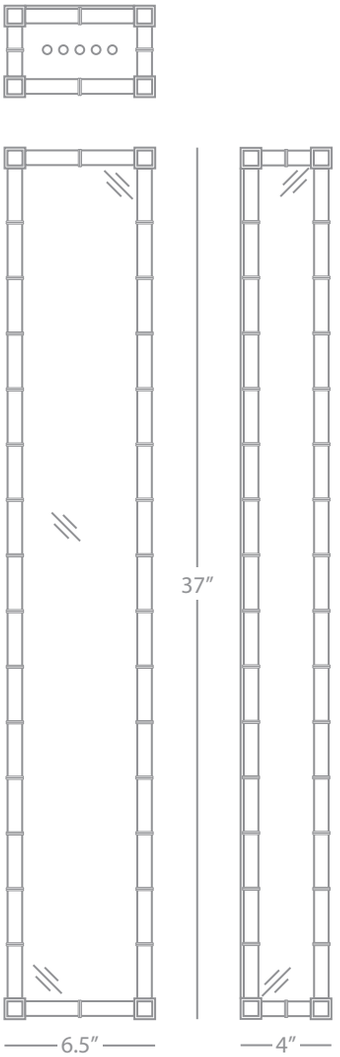

JONATHAN ADLER MEURICE

Z762

Large Wall Sconce

5 - 60W Max.
Bulb Type: B11 Torpedo
Direct Wire Only
Deep Patina Bronze Finish
Frosted White Glass Shade

FINISH OPTION:
S762 Polished Nickel

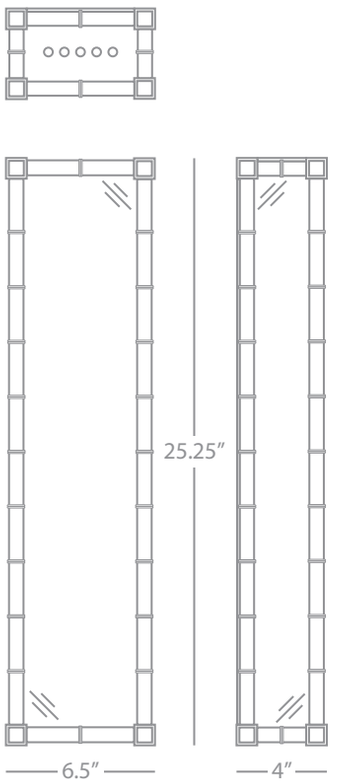

JONATHAN ADLER MEURICE

S761

Medium Wall Sconce

3 - 60W Max.
Bulb Type: B11 Torpedo
Direct Wire Only
Polished Nickel Finish
Frosted White Glass Shade

FINISH OPTION:
Z761 Deep Patina Bronze

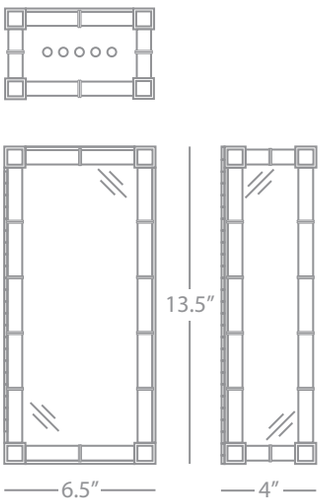

JONATHAN ADLER MEURICE

S760

Small Wall Sconce

2 - 60W Max.
Bulb Type: B11 Torpedo
Direct Wire Only
Polished Nickel Finish
Frosted White Glass Shade

FINISH OPTION:
Z760 Deep Patina Bronze



57LS



Z53ST



S57SN

Jonathan Adler Meurice

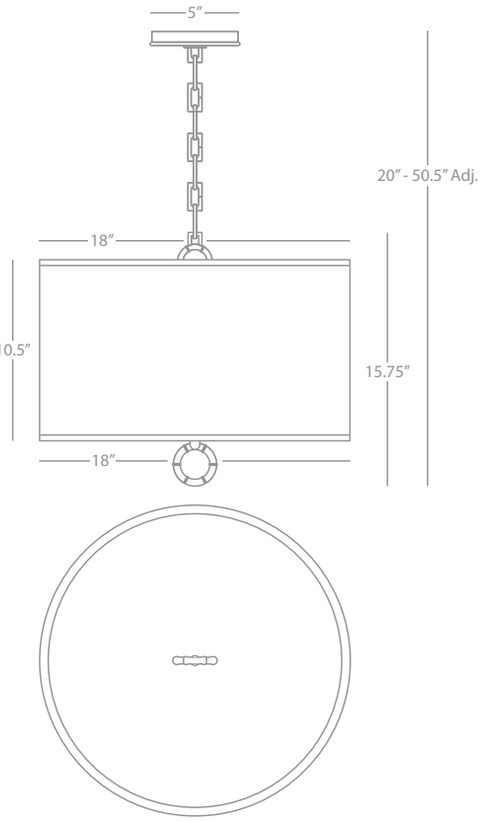

JONATHAN ADLER MEURICE

Z53ST

Small Pendant

2 - 100W Max.
Bulb Type: A
Direct Wire
Deep Patina Bronze Finish
Supernova Teal Printed Fabric Shade
17" Dia. White Acrylic Diffuser
Susp. Hardware: 3 Ft. Chain

FINISH/SHADE OPTIONS:

53LS	Antique Brass Limitless Smoke
53SN	Antique Brass Supernova Noir
53ST	Antique Brass Supernova Teal
S53LS	Polished Nickel Limitless Smoke
S53SN	Polished Nickel Supernova Noir
S53ST	Polished Nickel Supernova Teal
Z53LS	Deep Patina Bronze Limitless Smoke
Z53SN	Deep Patina Bronze Supernova Noir

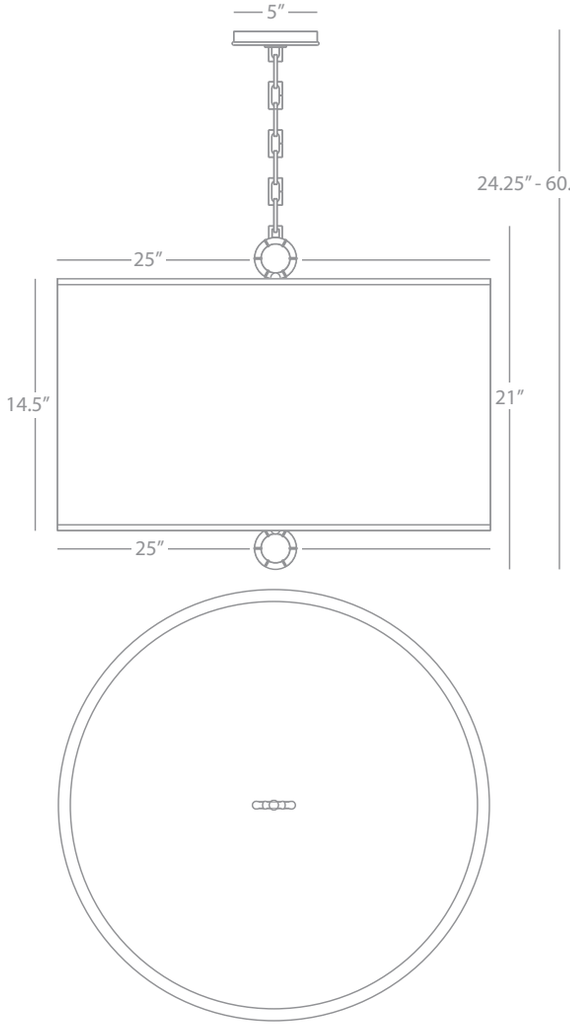

JONATHAN ADLER MEURICE

57LS

Large Pendant

3 - 100W Max.
Bulb Type: A
Direct Wire
Antique Brass Finish
Limitless Smoke Printed Fabric Shade
24" Dia. White Acrylic Diffuser
Susp. Hardware: 3 Ft. Chain

FINISH/SHADE OPTIONS:

57SN	Antique Brass Supernova Noir
57ST	Antique Brass Supernova Teal
S57LS	Polished Nickel Limitless Smoke
S57SN	Polished Nickel Supernova Noir
S57ST	Polished Nickel Supernova Teal
Z57LS	Deep Patina Bronze Limitless Smoke
Z57SN	Deep Patina Bronze Supernova Noir
Z57ST	Deep Patina Bronze Supernova Teal



Z668



S660



Z669



S668

Jonathan Adler Parker

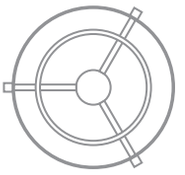

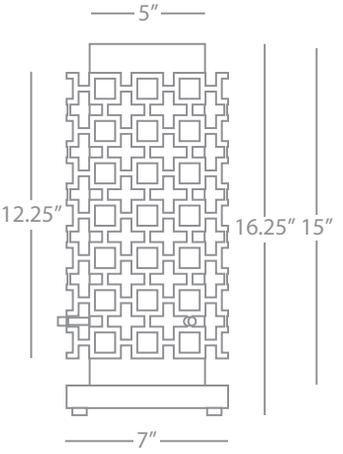

JONATHAN ADLER PARKER

S660

Table Torchiere

1 - 60W Max.
Bulb Type: A
Switch: Full Range Dimmer
Polished Nickel Finish
White Carrara Marble Base
Frosted White Cased Glass Shade
Perforated Metal Outer Shade

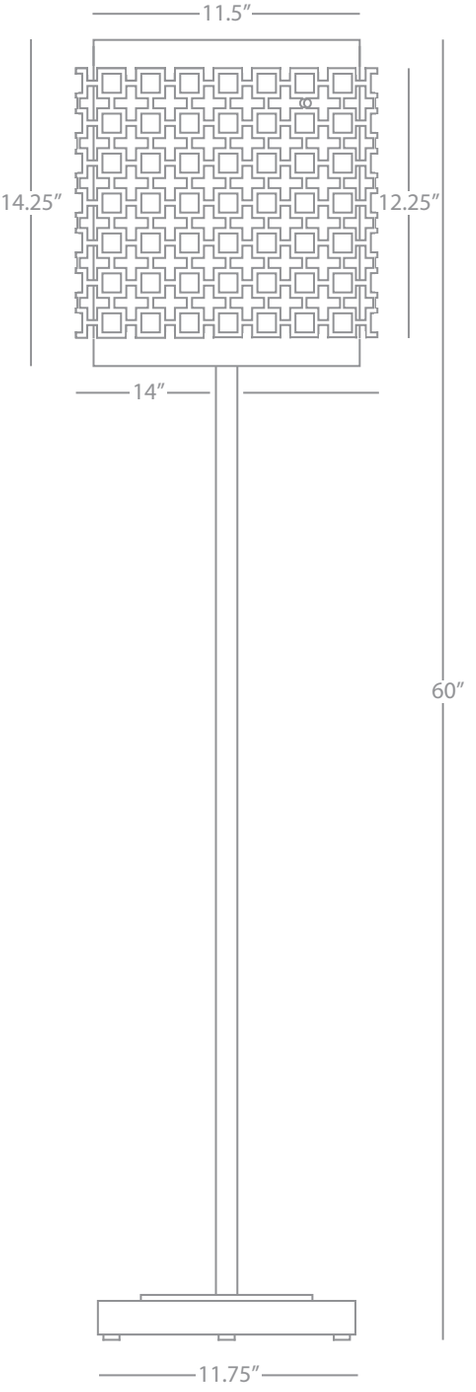

JONATHAN ADLER PARKER

S668

Floor Torchiere

2 - 60W Max.
Bulb Type: A
Switch: Full Range Foot Dimmer
Polished Nickel Base
White Carrara Marble Base
Frosted White Cased Glass Shade
Perforated Metal Outer Shade

FINISH OPTION:
Z668 Deep Patina Bronze
Matching Metal Base

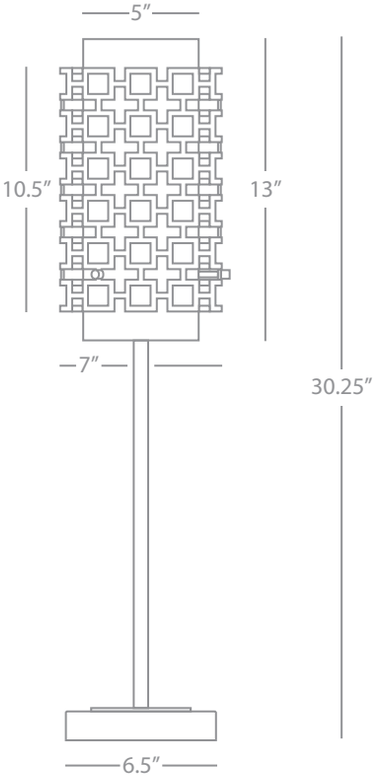

JONATHAN ADLER PARKER

Z669

Buffet Table Lamp

1 - 60W Max.
Bulb Type: A
Switch: On-Off Line Switch
Deep Patina Bronze Finish
Matching Metal Base
Frosted White Cased Glass Shade
Perforated Metal Outer Shade

FINISH OPTION:
S669 Polished Nickel
White Carrara Marble Base



S664



S663



Z662



667



Z639

Jonathan Adler Parker

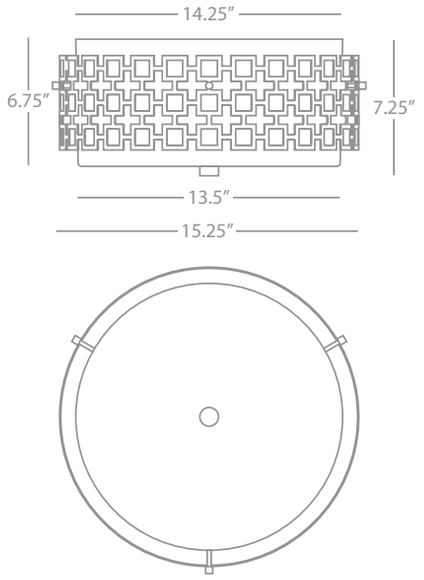

JONATHAN ADLER PARKER

S664
Flush Mount

3 - 75W Max.
Bulb Type: A
Direct Wire Only
Polished Nickel Finish
Frosted White Cased Glass Shade
Perforated Metal Outer Shade

FINISH OPTIONS:
664 Antique Brass
Z664 Deep Patina Bronze

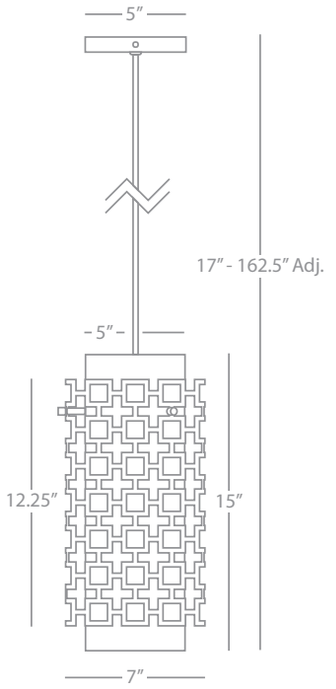

JONATHAN ADLER PARKER

S663
Pendant

1 - 60W Max.
Bulb Type: A
Direct Wire Only
Polished Nickel Finish
Frosted White Cased Glass Shade
Perforated Metal Outer Shade
Susp. Hardware: 12 Ft. Cord

FINISH OPTIONS:
663 Antique Brass
Z663 Deep Patina Bronze

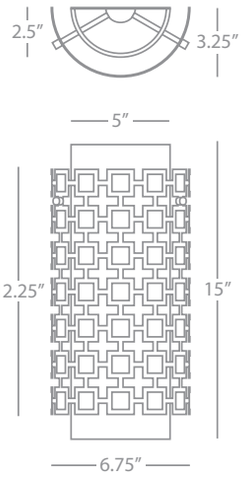

JONATHAN ADLER PARKER

Z662
Half Round Wall Sconce

1 - 60W Max.
Bulb Type: B, Candelabra
Direct Wire Only
Deep Patina Bronze Finish
Frosted White Cased Glass Shade
Perforated Metal Outer Shade

FINISH OPTIONS:
662 Antique Brass
S662 Polished Nickel

JONATHAN ADLER PARKER

667
Pendant Sconce

1 - 60W Max.
Bulb Type: A
Direct Wire Only
Antique Brass Finish
Frosted White Cased Glass Shade
Perforated Metal Outer Shade

FINISH OPTION:
S667 Polished Nickel

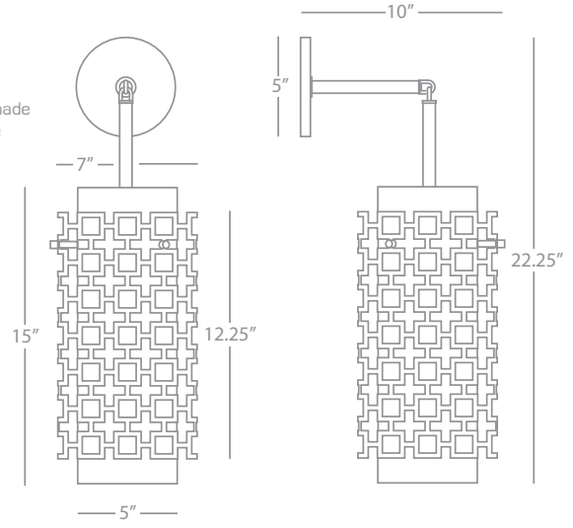

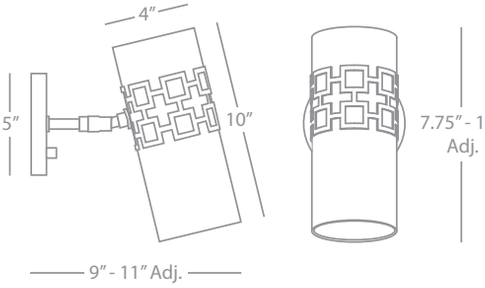

JONATHAN ADLER PARKER

Z639
Adjustable Wall Sconce

1 - 60W Max.
Bulb Type: G16.5 Candelabra
24" Cord Cover/Direct Wire
Deep Patina Bronze Finish
Frosted White Cased Glass Shade w/
Perforated Metal Detail

FINISH OPTIONS:
639 Antique Brass
S639 Polished Nickel

Jonathan Adler Parker

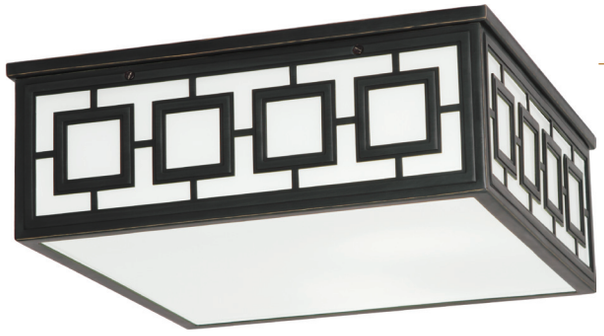

Z1947



1947



Z1946



S1946



S1945



1945

Jonathan Adler Parker

JONATHAN ADLER PARKER

1947

Flush Mount

3 - 40W Max.
Bulb Type: A
Direct Wire
Antique Brass Finish
Black Glass Side Panels
White Glass Bottom Panel

FINISH OPTIONS:

S1947	Polished Nickel White Glass
Z1947	Deep Patina Bronze White Glass

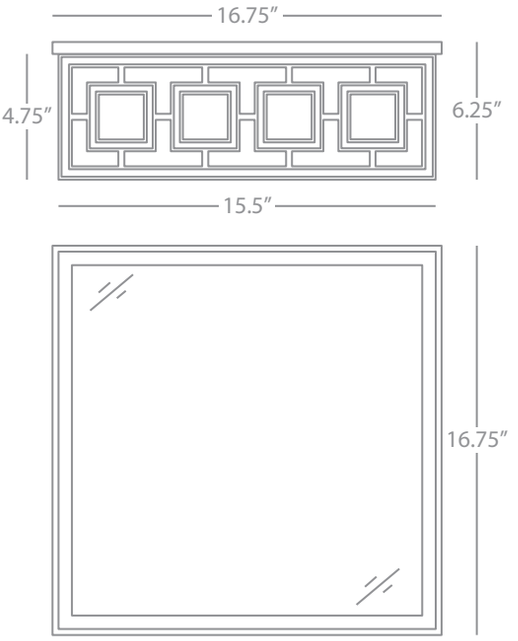

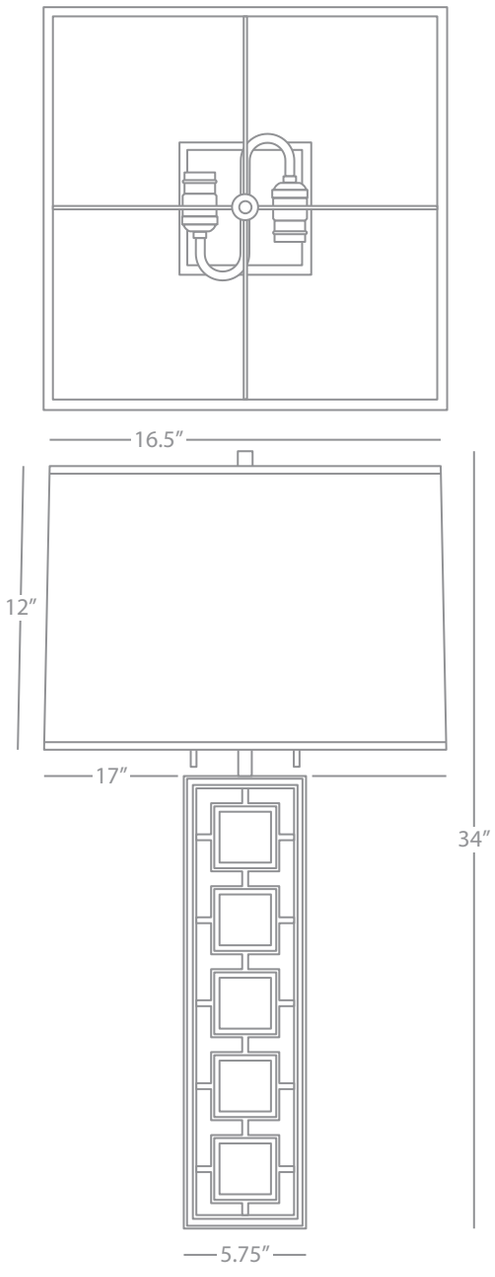

JONATHAN ADLER PARKER

1945

Table Lamp

2 - 100W Max.
Bulb Type: A
Switch: Hi-Lo Pull Chains
Antique Brass Finish
Black Opaque Acrylic Panels
Square Fondine Fabric Shade

FINISH/SHADE OPTIONS:

S1945	Polished Nickel White Acrylic Ascot White Fabric
Z1945	Deep Patina Bronze White Acrylic Ascot White Fabric

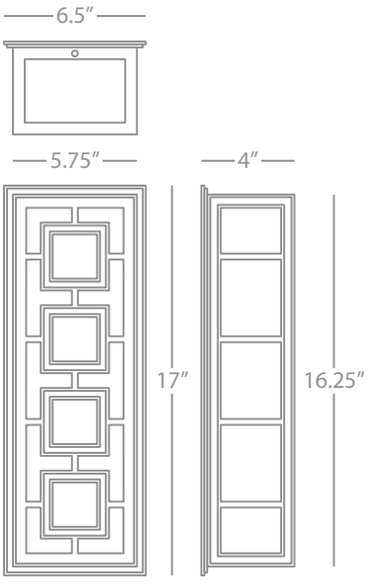

JONATHAN ADLER PARKER

S1946

Wall Sconce

2 - 60W Max.
Bulb Type: B, Medium Base
Direct Wire Only
Polished Nickel Finish
White Glass Shade

FINISH OPTIONS:

1946	Antique Brass Black Glass
Z1946	Deep Patina Bronze White Glass

Jonathan Adler Ventana



PN671



672



670

Jonathan Adler Ventana

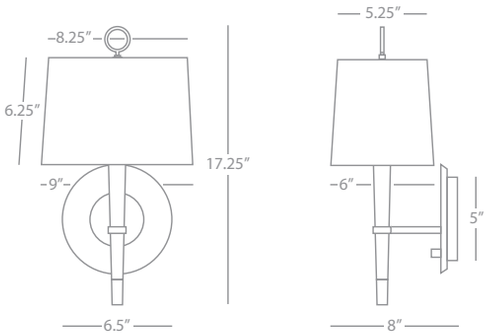

JONATHAN ADLER VENTANA

672

Wall Sconce

1 - 60W Max.
Bulb Type: G16.5 Candelabra
Switch: Hi-Lo Dimming
24" Cord Cover/Direct Wire
Ebony Finished Wood w/
Antique Brass Finished Accents
Natural Linen Shade w/ Rolled Edge Hem

FINISH OPTION:
PN672 Polished Nickel Finished Accents

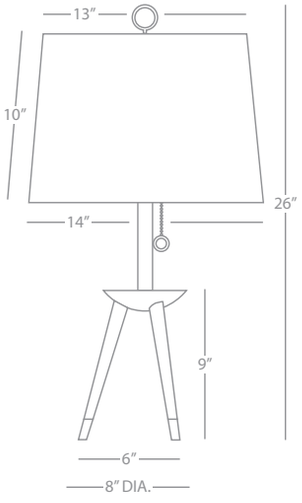

JONATHAN ADLER VENTANA

670

Tripod Table Lamp

1 - 150W Max.
Bulb Type: A
Switch: 3-Way Pull Chain
Ebony Finished Wood w/
Antique Natural Brass Finished Accents
Natural Linen Shade w/ Rolled Edge Hem
11.5" White Acrylic Diffuser

FINISH OPTION:
PN670 Polished Nickel Finished Accents

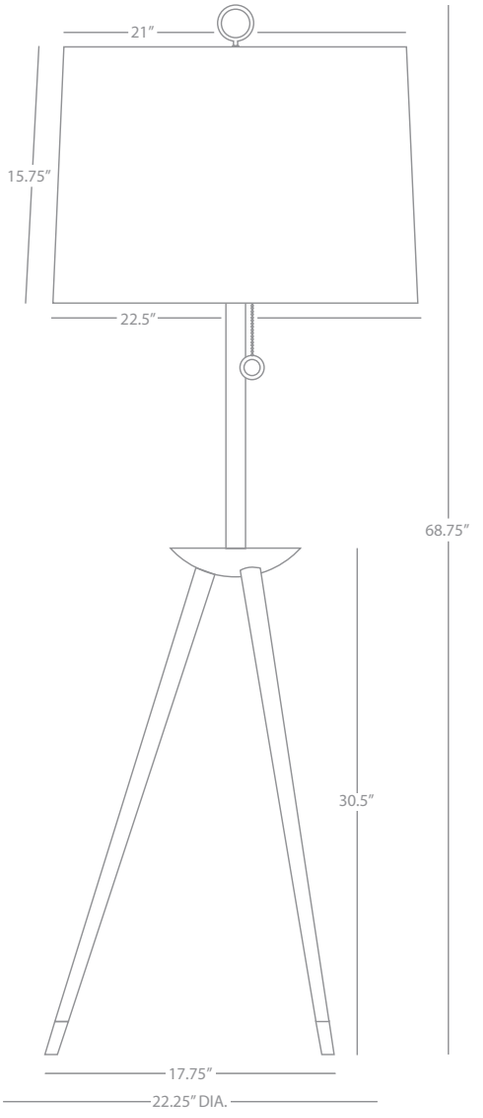

JONATHAN ADLER VENTANA

PN671

Tripod Floor Lamp

1 - 150W Max.
Bulb Type: A
Switch: 3-Way Pull Chain
Ebony Finished Wood w/
Polished Nickel Finished Accents
Natural Linen Shade w/
Rolled Edge Hem

FINISH OPTION:
671 Antique Brass Finished Accents

Jonathan Adler Ventana



PN685



PN674



673

Jonathan Adler Ventana

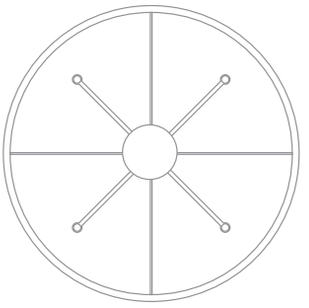

JONATHAN ADLER VENTANA

PN685

Single Tier Chandelier

4 - 60W Max.
Bulb Type: B, Candelabra
Direct Wire Only
Ebony Finished Wood w/
Polished Nickel Accents
Natural Linen Shade w/ Rolled Edge Hem
Susp. Hardware: 3 pcs. 5/8" x 12"
& 1 pc. 5/8" x 6" Extensions

FINISH OPTION:
685 Antique Brass Finished Accents

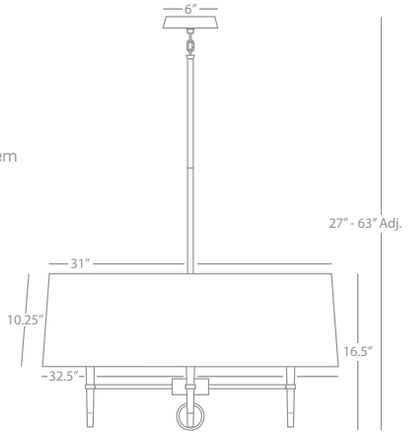

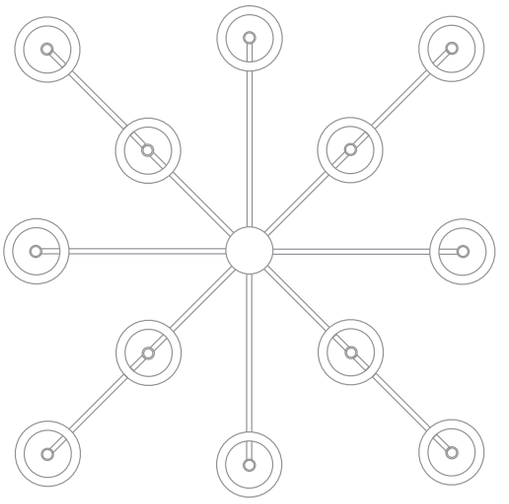

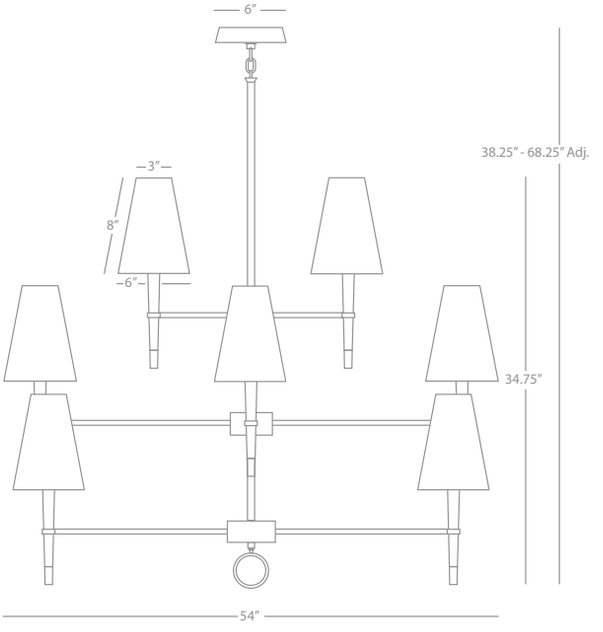

JONATHAN ADLER VENTANA

PN674

3-Tier, 12-Light Chandelier

12 - 25W Max.
Bulb Type: B, Candelabra
Direct Wire Only
Ebony Finished Wood w/ Polished Nickel Finished Accents
Natural Linen Fabric Shades w/ Rolled Edge Hem
Susp. Hardware: 3 pcs. 5/8" x 12"
& 1 pc. 5/8" x 6" Extensions

FINISH OPTION:
674 Antique Brass Finished Accents

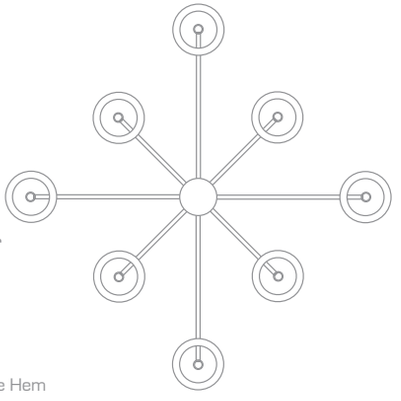

JONATHAN ADLER VENTANA

673

2-Tier, 8-Light Chandelier

8 - 25W Max.
Bulb Type: B, Candelabra
Direct Wire Only
Ebony Finished Wood w/
Antique Brass Finished Accents
Natural Linen Shade w/ Rolled Edge Hem
Susp. Hardware: 3 pcs. 5/8" x 12"
& 1 pc. 5/8" x 6" Extensions

FINISH OPTION:
PN673 Polished Nickel Finished Accents

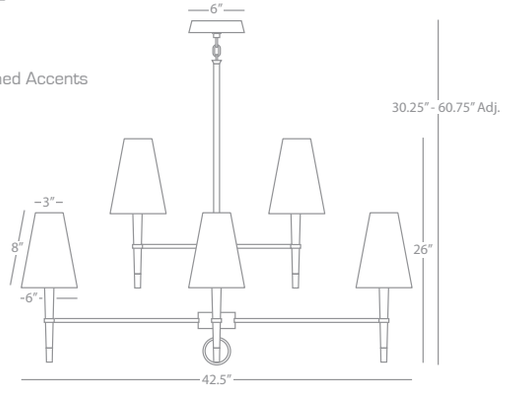

Jonathan Adler Ventana



718



PN771



771

Jonathan Adler Ventana

JONATHAN ADLER VENTANA

PN771

Double Sconce

2 - 60W Max.
Bulb Type: B, Candelabra
Switch: Hi-Lo Dimming
24" Cord Cover/Direct Wire
Ebony Finished Wood w/ Polished Nickel Finished Accents
Natural Linen Shade w/ Rolled Edge Hem

FINISH OPTION:
771 Antique Brass Finished Accents

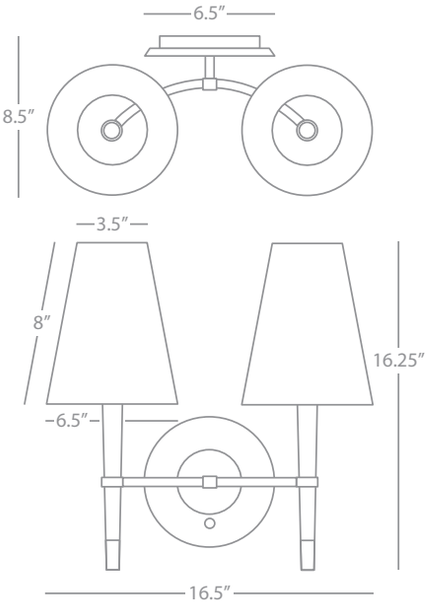

JONATHAN ADLER VENTANA

718

Oval Chandelier

8 - 25W Max.
Bulb Type: B, Candelabra
Direct Wire
Ebony Finished Wood w/ Antique Brass Finished Accents
Natural Linen Shade w/ Rolled Edge Hem
Susp. Hardware: 3 pcs. 5/8" x 12" &
1 pc. 5/8" x 6" Extensions

FINISH OPTION:
PN718 Polished Nickel Finished Accents

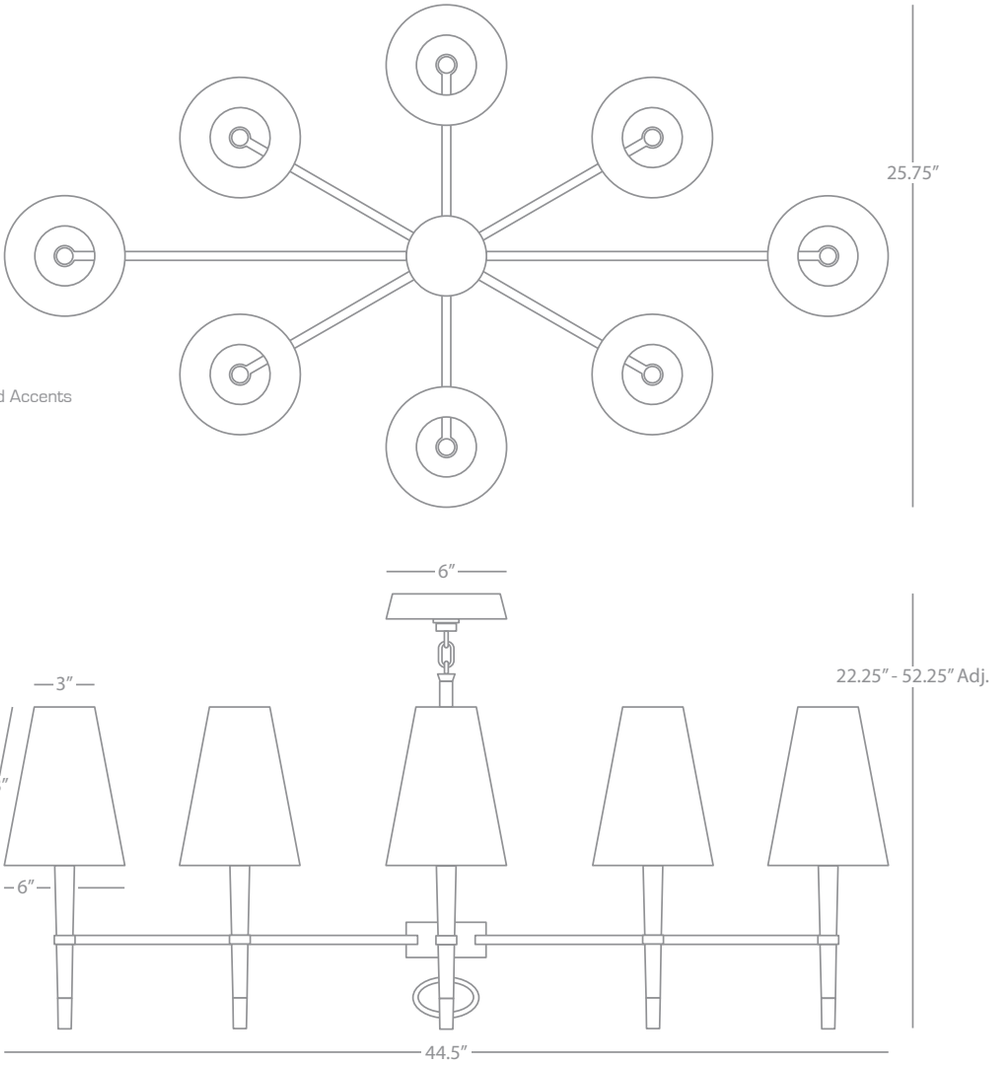



684B



679B



676



677



678B

Jonathan Adler Claridge

JONATHAN ADLER CLARIDGE

684B
Mini Tear Drop Accent Lamp

1 - 40W Max.
Bulb Type: B, Candelabra
Switch: Hi-Lo Line Switch
Lead Crystal w/ Polished Nickel Accents
Black Silk Dupioni Shade w/ Rolled Edge Hem

SHADE OPTION:
684 Oyster Gray Silk Dupioni

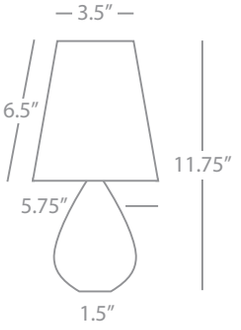

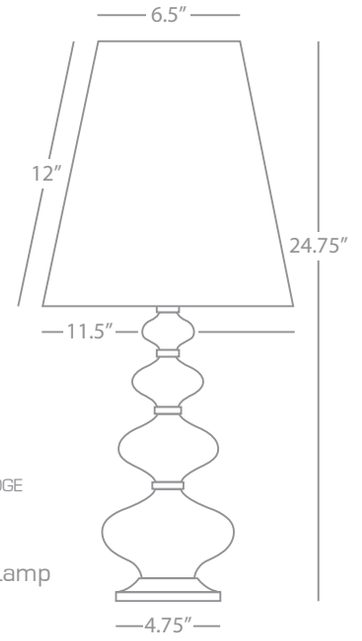

JONATHAN ADLER CLARIDGE

677
Component Table Lamp

1 - 100W Max.
Bulb Type: A
Switch: Full Range Dimmer
Lead Crystal w/ Polished Nickel Accents
Oyster Gray Silk Dupioni Shade w/ Rolled Edge Hem

SHADE OPTION:
677B Black Silk Dupioni

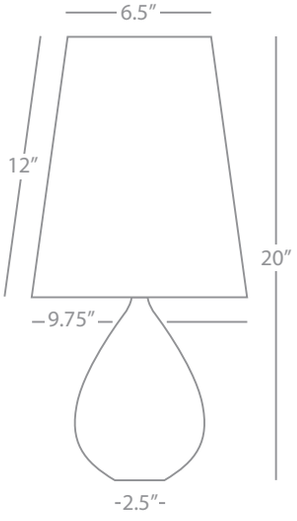

JONATHAN ADLER CLARIDGE

676
Tear Drop Table Lamp

1 - 100W Max.
Bulb Type: A
Switch: Full Range Dimmer
Lead Crystal w/ Polished Nickel Accents
Oyster Gray Silk Dupioni Shade w/ Rolled Edge Hem

SHADE OPTION:
676B Black Silk Dupioni

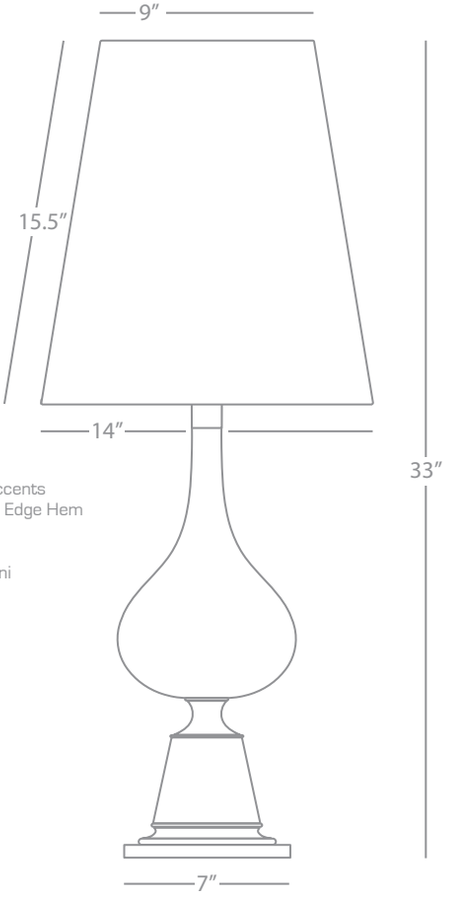

JONATHAN ADLER CLARIDGE

679B
Genie Table Lamp

1 - 150W Max.
Bulb Type: A
Switch: Hi-Lo Dimming
Lead Crystal w/ Polished Nickel Accents
Black Silk Dupioni Shade w/ Rolled Edge Hem

SHADE OPTION:
679 Oyster Gray Silk Dupioni

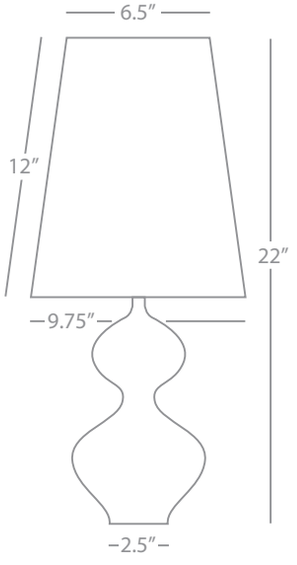

JONATHAN ADLER CLARIDGE

678B
Lantern Table Lamp

1 - 100W Max.
Bulb Type: A
Switch: Full Range Dimmer
Lead Crystal w/ Polished Nickel Accents
Black Silk Dupioni Shade w/ Rolled Edge Hem

SHADE OPTION:
678 Oyster Gray Silk Dupioni

Jonathan Adler Havana



W693



W694



W709



W692



W708



W691

Jonathan Adler Havana

JONATHAN ADLER HAVANA

W708

Double Sconce

2 - 60W Max.
Bulb Type: A
Switch: Hi-Lo Line Switch
24" Cord Cover/Direct Wire
Polished Nickel Finish
Powder Coat White Metal Shade w/
Perforated Design

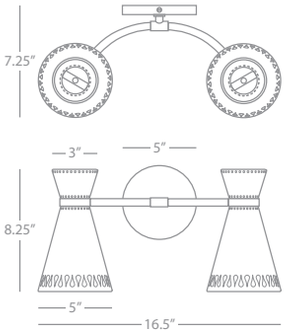

JONATHAN ADLER HAVANA

W694

Single Pendant

1 - 100W Max.
Bulb Type: A
Direct Wire Only
Polished Nickel Finish
Powder Coat White Metal Shade w/
Perforated Design
Susp. Hardware: 3 pcs. 1/2" x 12" &
1 pcs. 1/2" x 6" Extensions

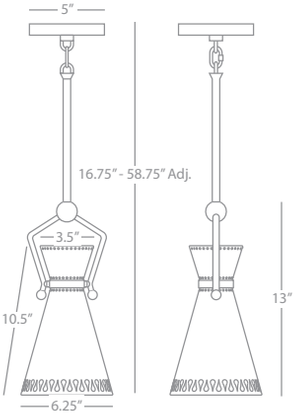

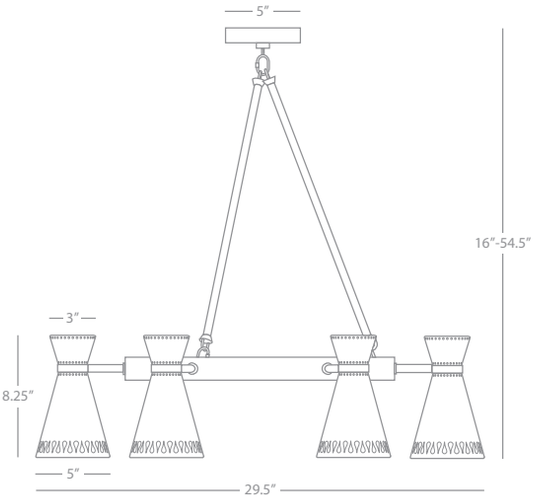

JONATHAN ADLER HAVANA

W709

6-Light Chandelier

6 - 60W Max.
Bulb Type: A
Direct Wire Only
Polished Nickel Finish
White Powder Coat Metal Shades w/
Perforated Design
Susp. Hardware: 9 pcs. 1/2" x
12" & 3 pcs. 1/2" x 6" Extenstions

JONATHAN ADLER HAVANA

W691

Task Table Lamp

1 - 60W Max.
Bulb Type: A
Switch: Hi-Lo Line Switch
Polished Nickel Finish
Powder Coat White Metal Shade
w/ Perforated Design

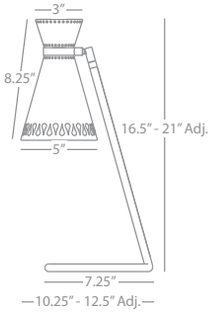

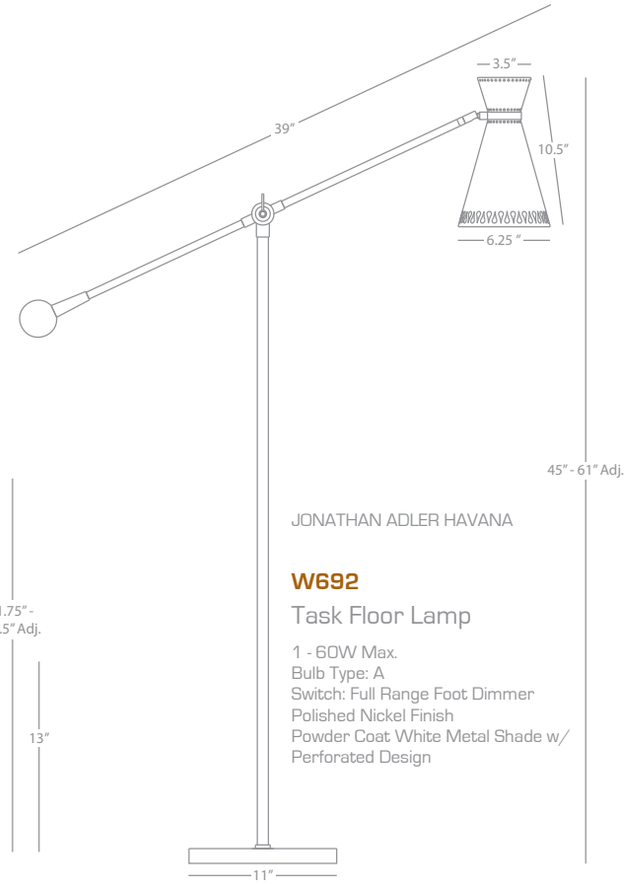

JONATHAN ADLER HAVANA

W693

Triple Pendant

3 - 100W Max.
Bulb Type: A
Direct Wire Only
Polished Nickel Finish
Powder Coat White Metal Shades
w/ Perforated Design
Susp. Hardware: 6 pcs. 1/2" x
12" & 2 pcs. 1/2" x 6" Extenstions

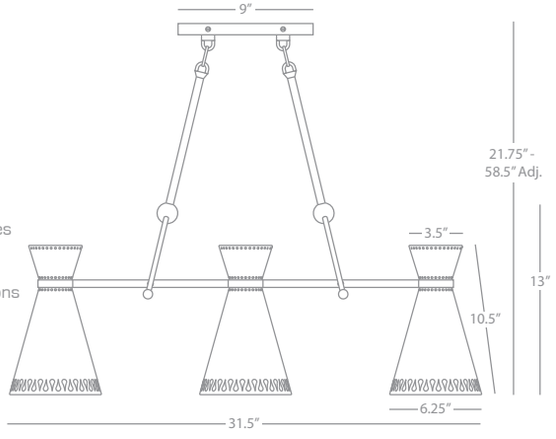

JONATHAN ADLER HAVANA

W692

Task Floor Lamp

1 - 60W Max.
Bulb Type: A
Switch: Full Range Foot Dimmer
Polished Nickel Finish
Powder Coat White Metal Shade w/
Perforated Design



W695



W698



W697



W696

Jonathan Adler Havana

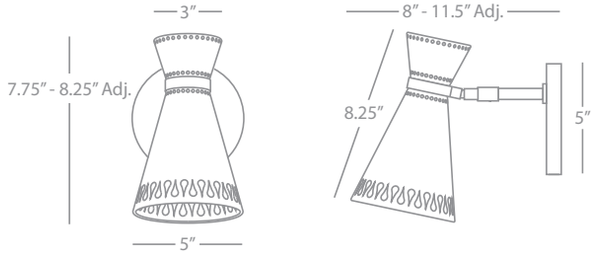

JONATHAN ADLER HAVANA

W697

Wall Sconce

1 - 60W Max.
Bulb Type: A
Switch: Hi-Lo Dimming
24" Cord Cover/Direct Wire
Polished Nickel Finish
Adjustable Powder Coat White Metal Shade w/ Perforated Design

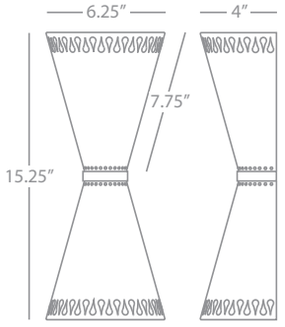

JONATHAN ADLER HAVANA

W698

Double Shaded Half Round Sconce

2 - 60W Max.
Bulb Type: B, Candelabra
Direct Wire Only
Polished Nickel Finish
Powder Coat White Metal Shades w/ Perforated Design
Can Be Mounted Horizontally or Vertically

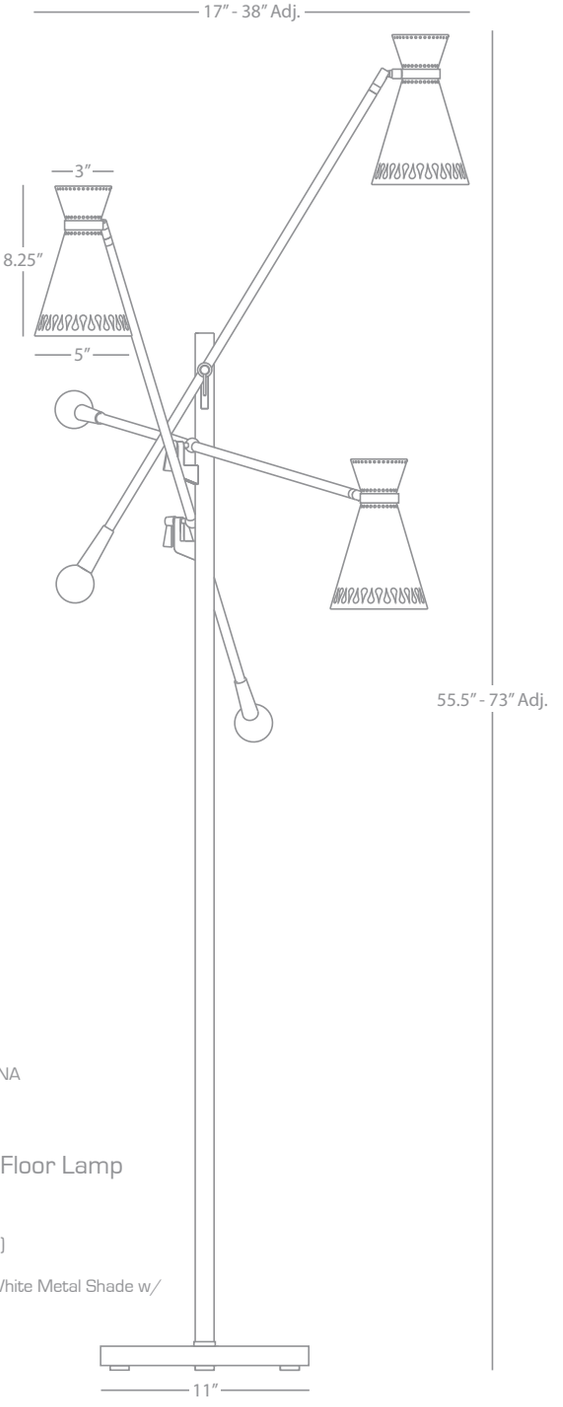

JONATHAN ADLER HAVANA

W696

Adjustable 3-Light Floor Lamp

3 - 60W Max.
Bulb Type: A
Switch: Hi-Lo Dimming (X3)
Polished Nickel Finish
Adjustable Powder Coat White Metal Shade w/ Perforated Design

JONATHAN ADLER HAVANA

W695

Wall Swinger

1 - 60W Max.
Bulb Type: A
Switch: Hi-Lo Rotary
24" Cord Cover/Direct Wire
Polished Nickel Finish
Adjustable Powder Coat White Metal Shade w/ Perforated Design

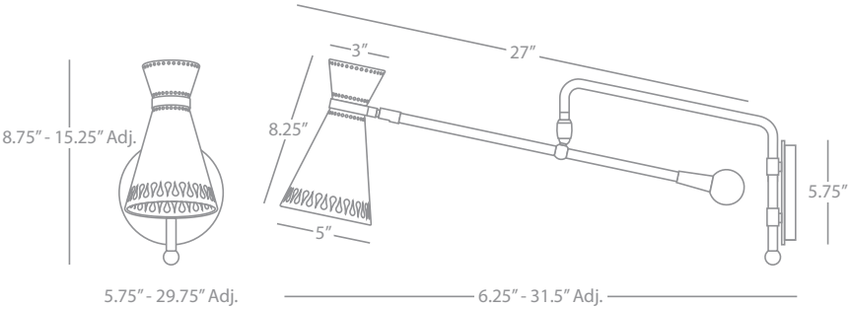

Jonathan Adler Ipanema



S699



S700



S701

Jonathan Adler Ipanema

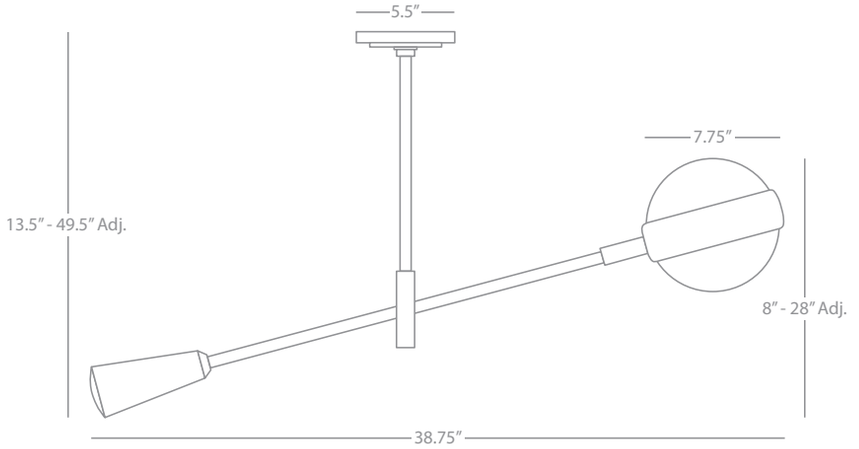

JONATHAN ADLER IPANEMA

S699

Single Boom Pendant

1 - 40W Max.
Bulb Type: A
Direct Wire
Polished Nickel Finish
White Cased Glass Shade
Susp. Hardware: 3 pcs. 5/8" x 12" & 1 pc. 5/8" x 6" Extensions

*Can NOT be hung on vaulted ceilings.

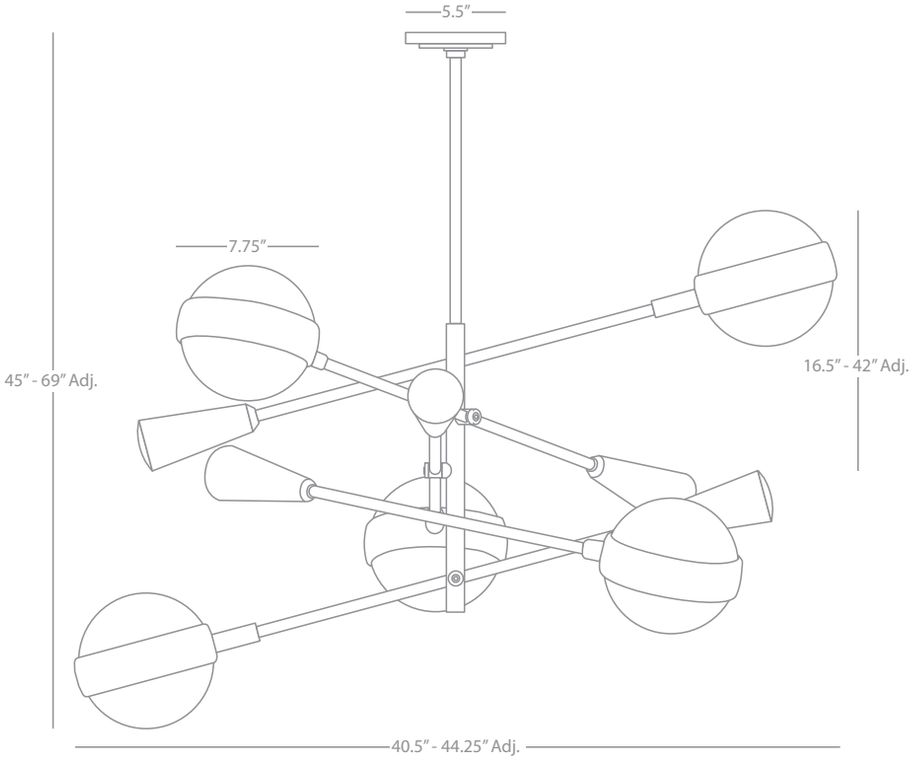

JONATHAN ADLER IPANEMA

S700

Multi-Boom Pendant

5 - 40W Max.
Bulb Type: A
Direct Wire
Polished Nickel Finish
White Cased Glass Shades
Susp. Hardware: 3 pcs. 5/8" x 12" & 1 pc. 5/8" x 6" Extensions

*Can NOT be hung on vaulted ceilings.

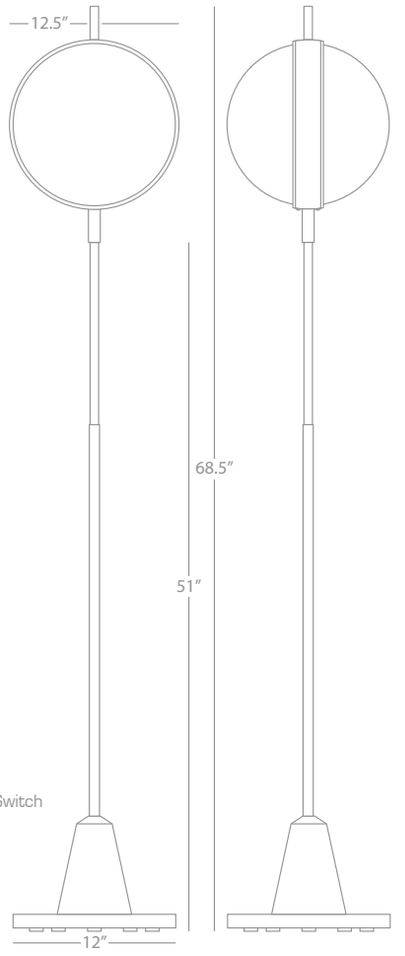

JONATHAN ADLER IPANEMA

S701

Floor Lamp

1 - 100W Max.
Bulb Type: A
Switch: Full Range Dimmer Foot Switch
Polished Nickel Finish
Carrara Marble Base
White Cased Glass Shade



S875



708



S708



S707



707

706

Jonathan Adler Bristol

JONATHAN ADLER BRISTOL

S875

Adjustable Table Easel w/ Lamp

1 - 40W Max.
Bulb Type: G16.5, Candelabra Base
Switch: On-Off Line Switch
Polished Nickel Finish
Carrara Marble Base
Adjustable Metal Shade

FINISH OPTION:
875 Antique Brass
Honed Travertine Base

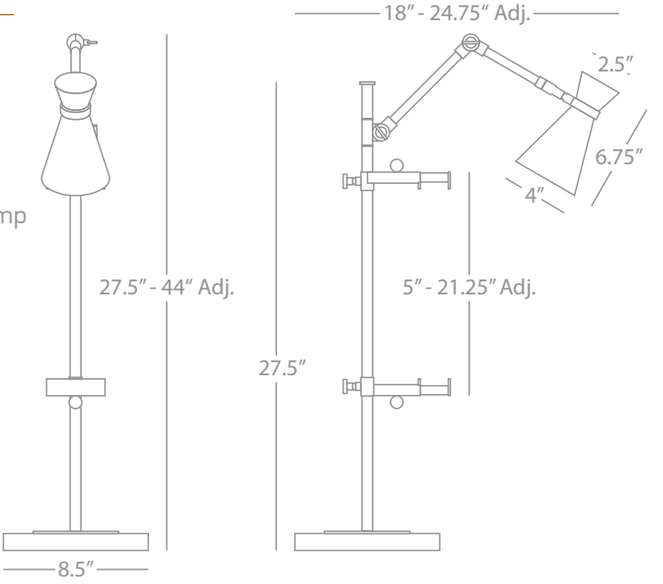

JONATHAN ADLER BRISTOL

708

Spotlight Accent Lamp

1 - 50W Max.
Bulb Type: PAR20, Medium Base Halogen
Switch: Hi-Lo Dimming
Antique Brass Finish
Metal Shade
Honed Travertine Base

FINISH OPTION:
S708 Polished Nickel
Carrara Marble

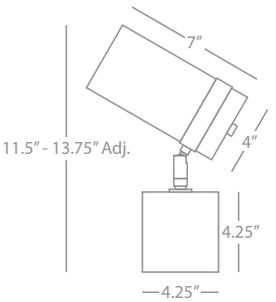

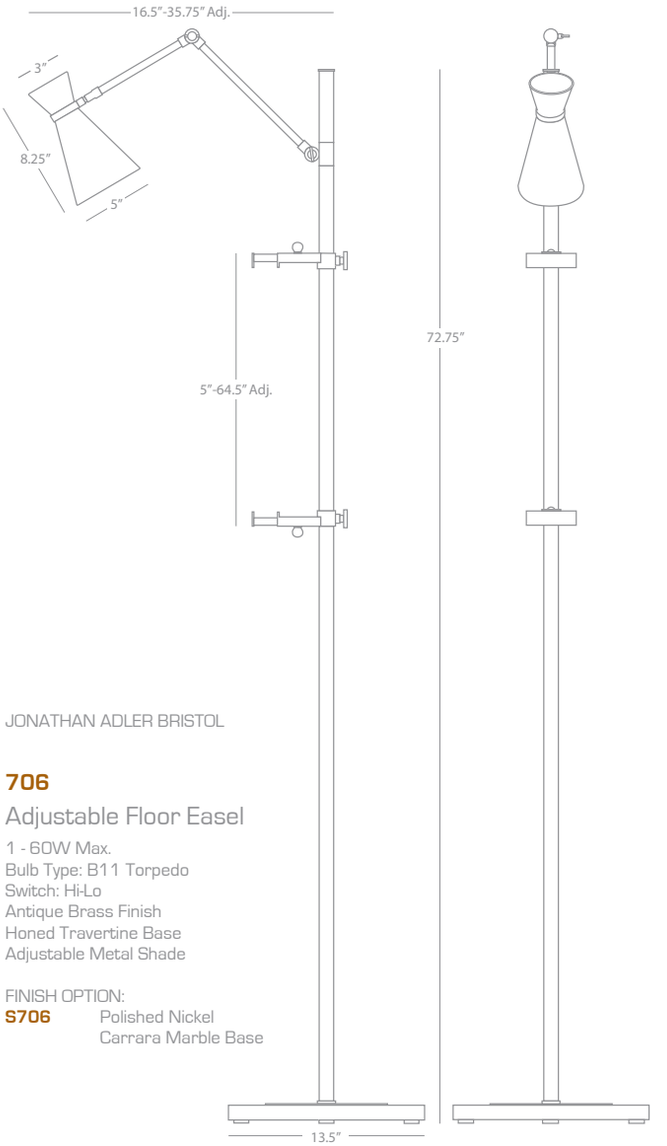

JONATHAN ADLER BRISTOL

S707

Adjustable Table Easel

Polished Nickel Finish
Carrara Marble Base

FINISH OPTION:
707 Natural Brass
Honed Travertine Base

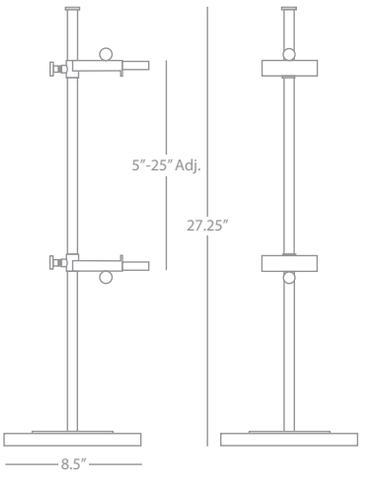

JONATHAN ADLER BRISTOL

706

Adjustable Floor Easel

1 - 60W Max.
Bulb Type: B11 Torpedo
Switch: Hi-Lo
Antique Brass Finish
Honed Travertine Base
Adjustable Metal Shade

FINISH OPTION:
S706 Polished Nickel
Carrara Marble Base

Jonathan Adler Sputnik



711



S710



S713



714

Jonathan Adler Sputnik

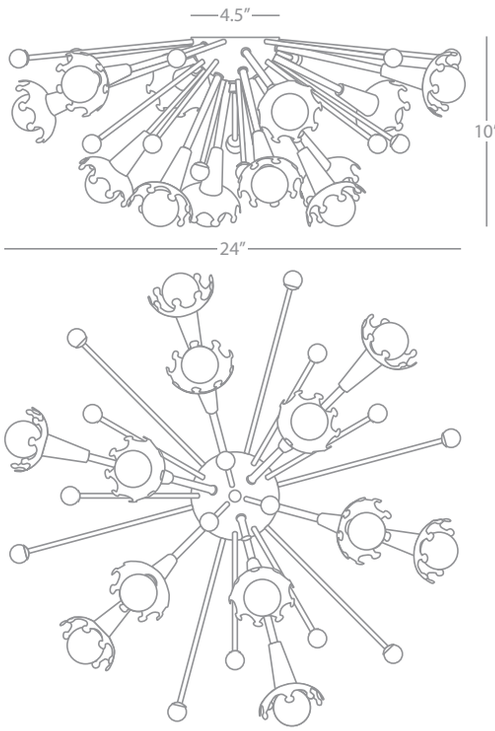

JONATHAN ADLER SPUTNIK

711

Flush Mount/Sconce

12 - 40W Max.
Bulb Type: G16.5 Candelabra
Direct Wire Only
Antique Brass Finish w/
Crystal Accents

FINISH OPTION:
S711 Polished Nickel

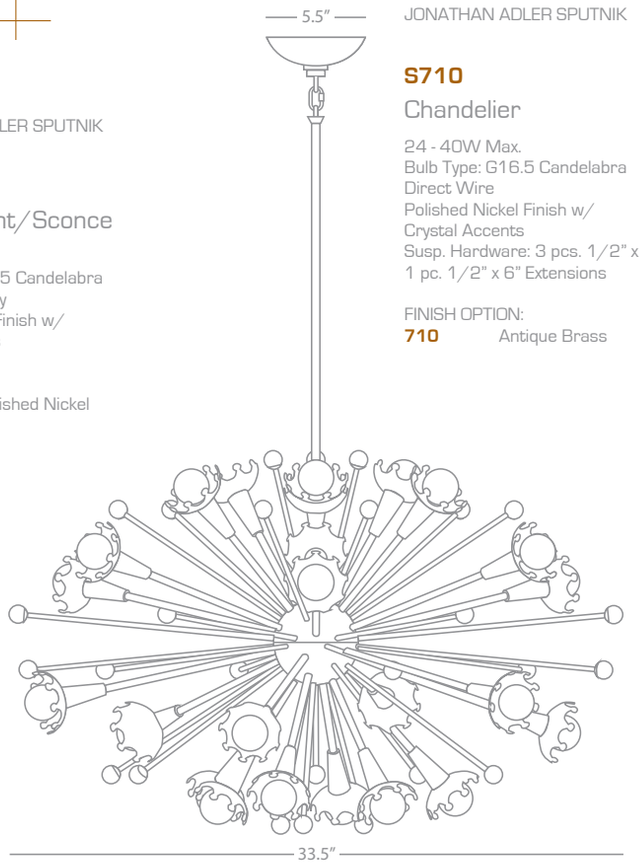

JONATHAN ADLER SPUTNIK

S710

Chandelier

24 - 40W Max.
Bulb Type: G16.5 Candelabra
Direct Wire
Polished Nickel Finish w/
Crystal Accents
Susp. Hardware: 3 pcs. 1/2" x 12" &
1 pc. 1/2" x 6" Extensions

FINISH OPTION:
710 Antique Brass

JONATHAN ADLER SPUTNIK

S713

Pendant

18 - 40W Max.
Bulb Type: G16.5 Candelabra
Direct Wire
Polished Nickel Finish w/
Crystal Accents
Susp. Hardware: 3 pcs. 1/2" x 12" &
1 pc. 1/2" x 6" Extensions

FINISH OPTION:
713 Antique Brass

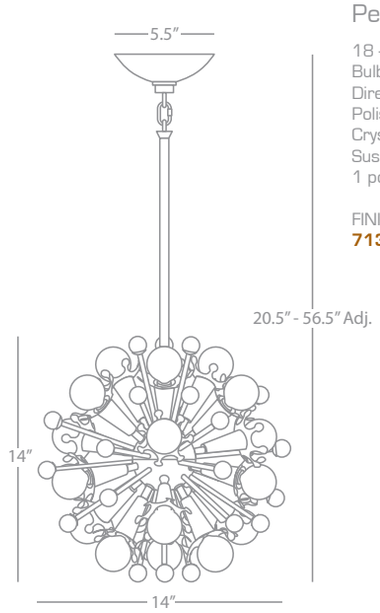

JONATHAN ADLER SPUTNIK

714

Large Chandelier

24 - 40W Max.
Bulb Type: G16.5 Candelabra
Direct Wire
Antique Brass Finish w/
Crystal Accents
Susp. Hardware: 3 pcs. 5/8" x 12" &
1 pc. 5/8" x 6" Extensions

FINISH OPTION:
S714 Polished Nickel

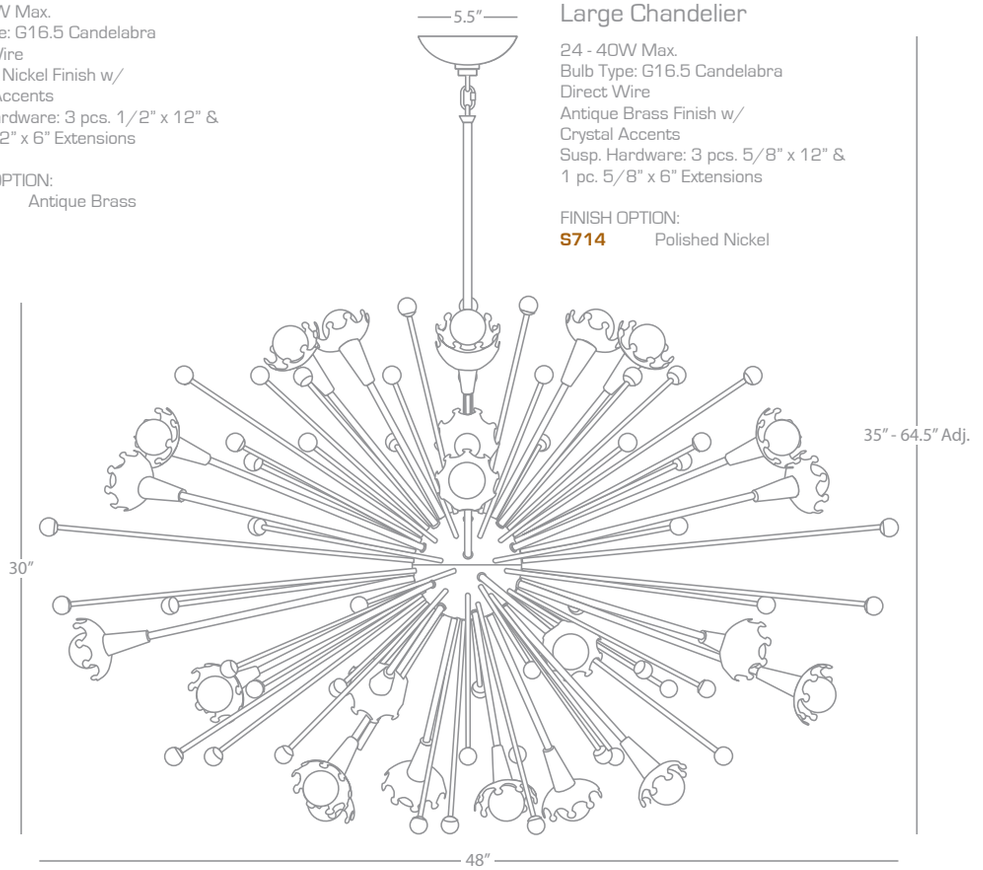



S712



712

Jonathan Adler Mayfair

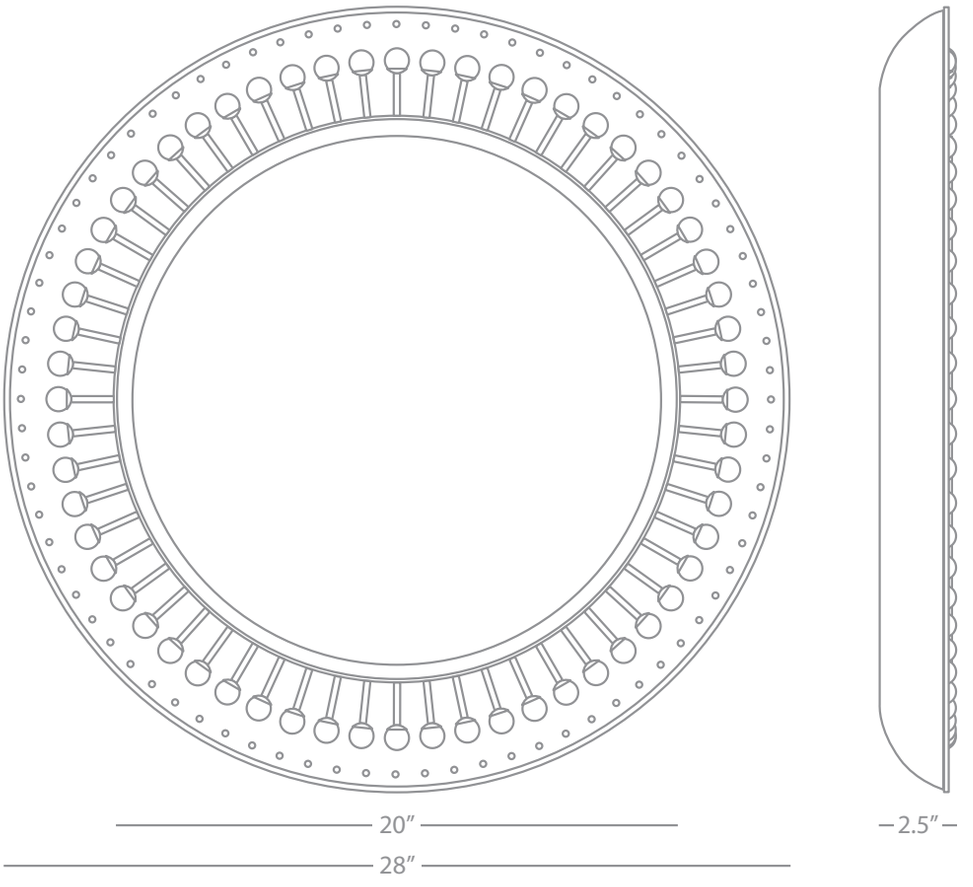

JONATHAN ADLER MAYFAIR

712

Backlit Mirror

1 - 32W Max.
Bulb Type: T9 12" Circline CFL
Direct Wire Only
Antique Brass Finish w/
Crystal Accents
20" Dia. Mirror

FINISH OPTION:
S712 Polished Nickel

Jonathan Adler Ceramic



732



731



730L



730R

Jonathan Adler Ceramic

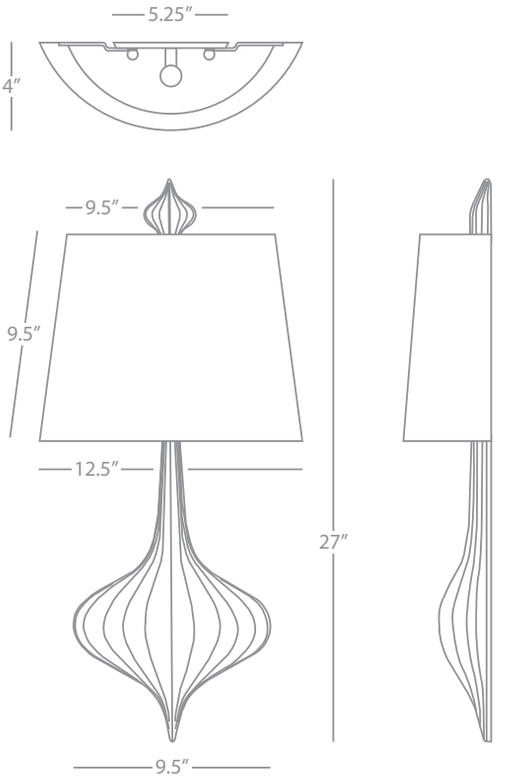

JONATHAN ADLER CERAMIC

732

Lantern Wall Sconce

1 - 60W Max.
Bulb Type: A
Direct Wire Only
Ceramic w/White Glaze Finish
White Linen Fabric Shade w/
Rolled Edge Hem

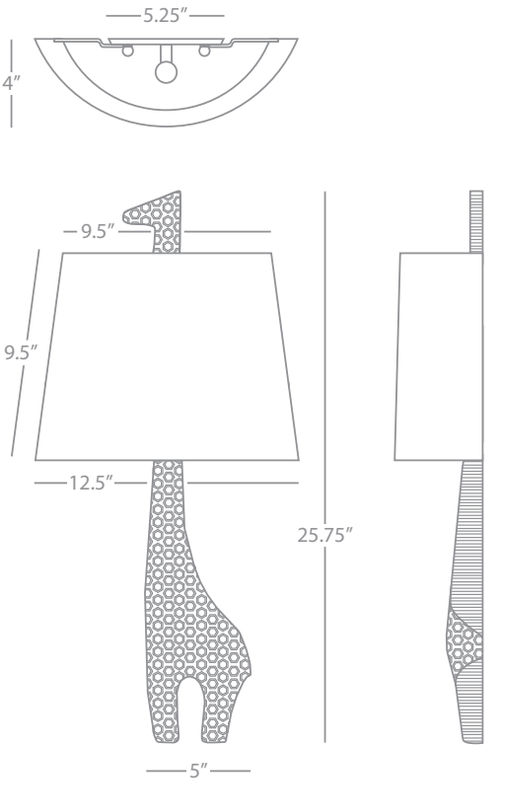

JONATHAN ADLER CERAMIC

730L

Giraffe Wall Sconce (Left Facing)

1 - 60W Max.
Bulb Type: A
Direct Wire Only
Ceramic w/White Glaze Finish
White Linen Fabric Shade w/
Rolled Edge Hem

OPTION:
730R Giraffe Wall Sconce (Right Facing)

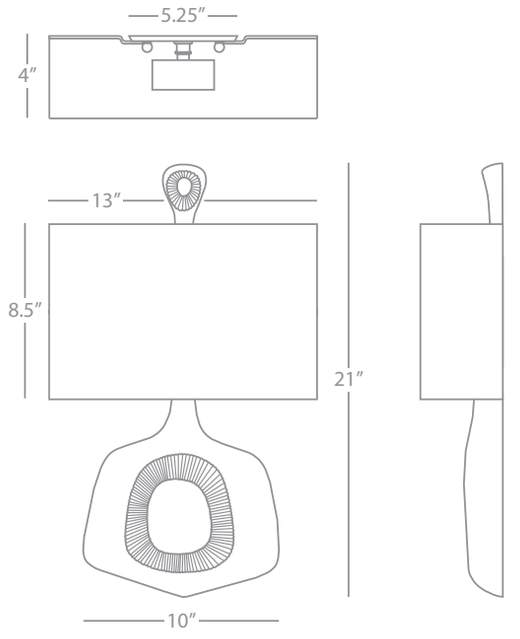

JONATHAN ADLER CERAMIC

731

Reform Wall Sconce

2 - 60W Max.
Bulb Type: A
Direct Wire Only
Ceramic w/White Glaze Finish
Rectangular White Linen Fabric Shade w/ Rolled Edge Hem

Jonathan Adler Capri



BG734



WH735



BL737



OR738



BL732



OR730



WH736

Jonathan Adler Capri

JONATHAN ADLER CAPRI

WH736

Accent Lamp

1 - 150W Max.
Bulb Type: A
Switch: 3-Way
White Cased Glass w/
Polished Nickel Accents
Translucent Ceramik Blanco
Parchment Shade

COLOR OPTIONS:
BG736 Gray
BL736 Blue
OR736 Orange

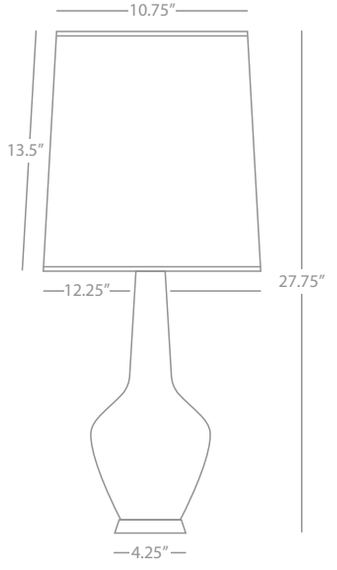

JONATHAN ADLER CAPRI

BG734

Pendant

1 - 100W Max.
Bulb Type: A
Direct Wire Only
Gray Cased Glass w/
Polished Nickel Accents
Susp. Harware: 11 Ft. White Cord

COLOR OPTIONS:
BL734 Blue
OR734 Orange
WH734 White

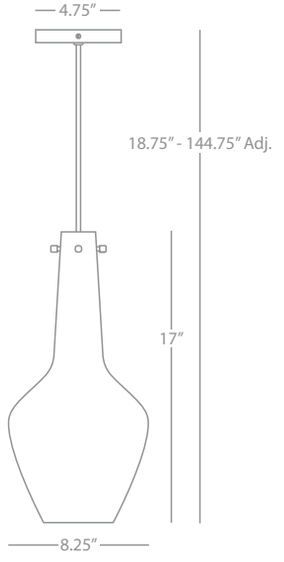

JONATHAN ADLER CAPRI

OR730

Tall Table Lamp

1 - 150W Max.
Bulb Type: A
Switch: Full Range Dimmer
Orange Cased Glass w/
Polished Nickel Accents
Translucent Ceramik Blanco
Parchment Shade

COLOR OPTIONS:
BG730 Gray
BL730 Blue
WH730 White

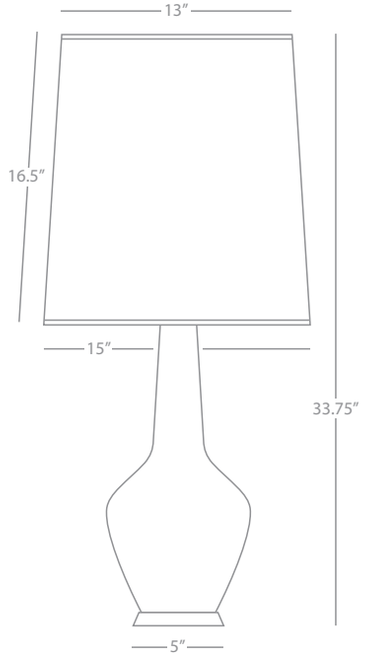

JONATHAN ADLER CAPRI

WH735

Wall Sconce

1 - 60W Max.
Bulb Type: B11 Torpedo
Switch: Hi-Lo Dimming
24" Cord Cover/ Direct Wire
Polished Nickel Finish
White Cased Glass Shade

COLOR OPTIONS:
BG735 Gray
BL735 Blue
OR735 Orange

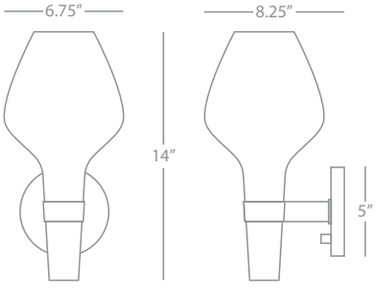

JONATHAN ADLER CAPRI

BL737

Small Table Torchiere

1 - 150W Max.
Bulb Type: A
Switch: 3-Way
Walnut Finished Wood Base w/
Polished Nickel Accents
Blue Cased Glass Shade

COLOR OPTIONS:
BG737 Gray
OR737 Orange
WH737 White

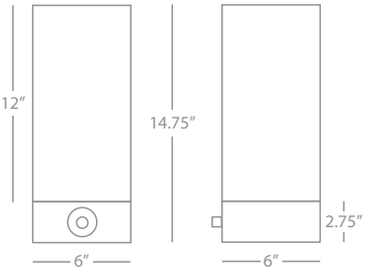

JONATHAN ADLER CAPRI

OR738

Large Table Torchiere

1 - 150W Max.
Bulb Type: A
Switch: 3-Way
Walnut Finished Wood Base w/
Polished Nickel Accents
Orange Cased Glass Shade

COLOR OPTIONS:
BG738 Gray
BL738 Blue
WH738 White

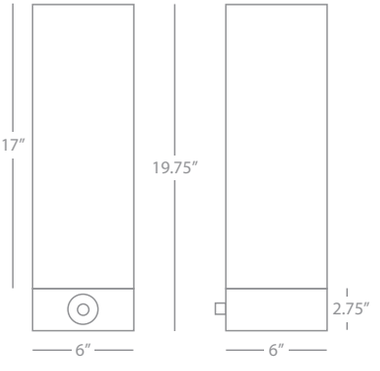

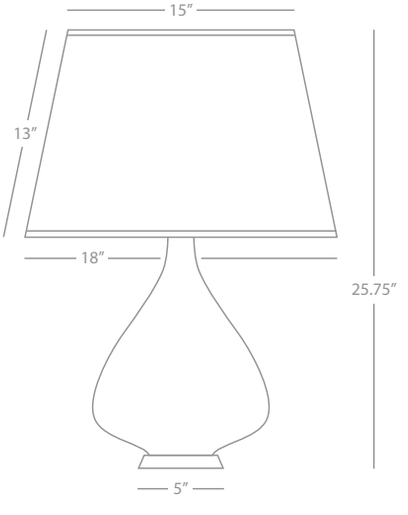

JONATHAN ADLER CAPRI

BL732

Table Lamp

1 - 150W Max:
Bulb Type: A
Switch: Full Range Dimmer
Blue Cased Glass w/
Polished Nickel Accents
Translucent Ceramik Blanco
Parchment Shade

COLOR OPTIONS:
BG732 Gray
OR732 Orange
WH732 White

Jonathan Adler Capri



WH739

Jonathan Adler Capri

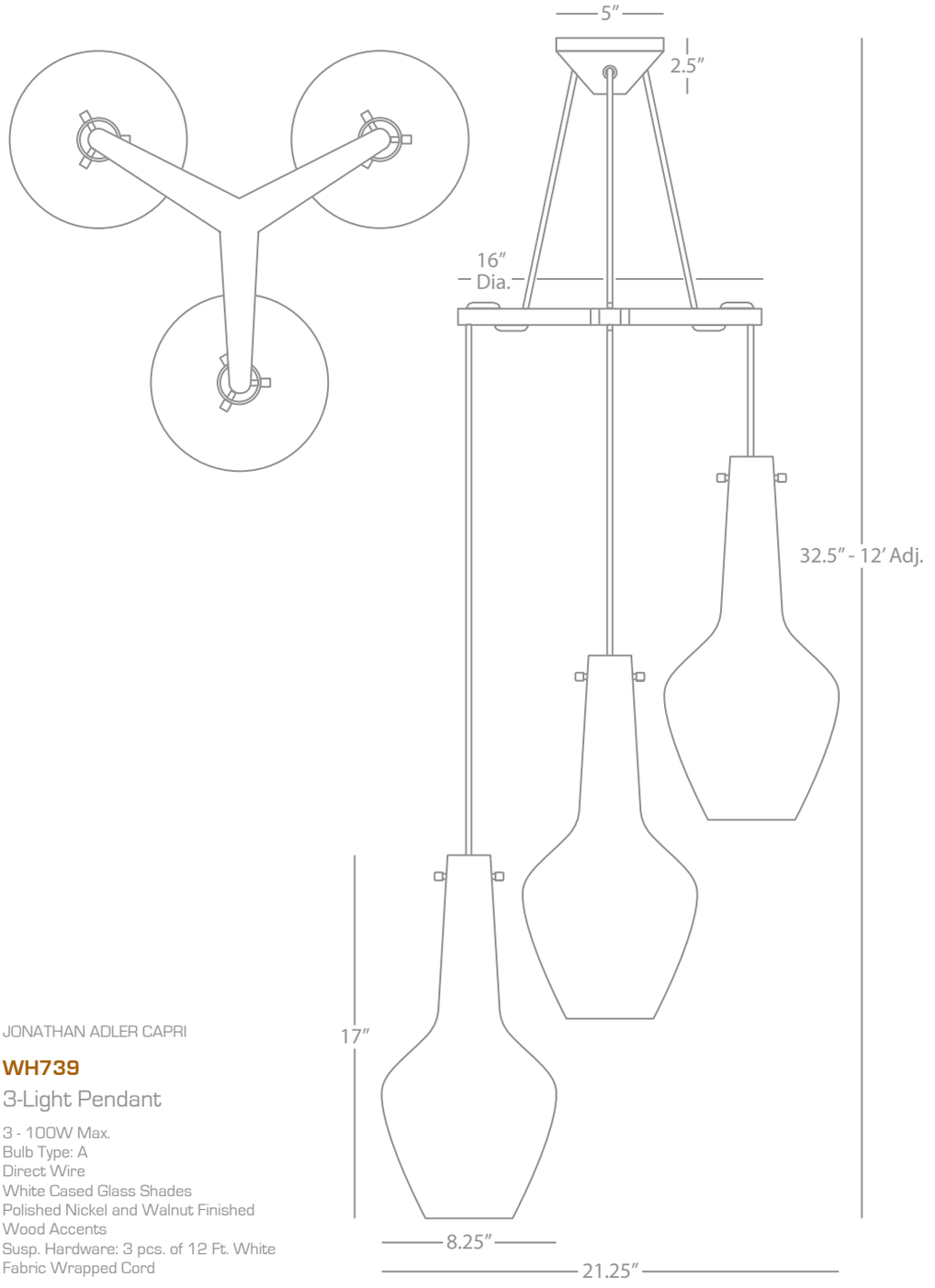

JONATHAN ADLER CAPRI

WH739

3-Light Pendant

3 - 100W Max.
Bulb Type: A
Direct Wire
White Cased Glass Shades
Polished Nickel and Walnut Finished Wood Accents
Susp. Hardware: 3 pcs. of 12 Ft. White Fabric Wrapped Cord



S755



755

Jonathan Adler Milano

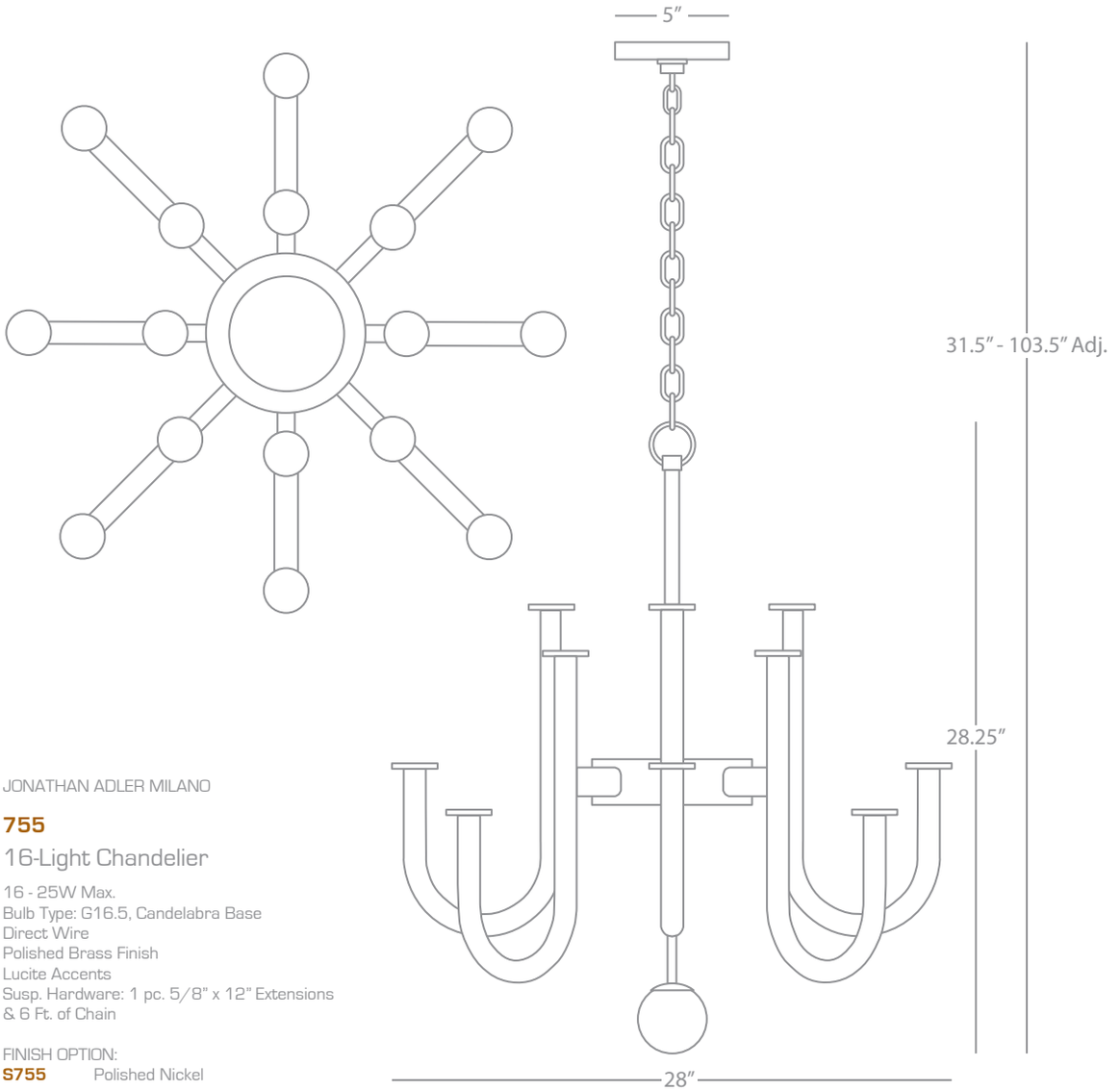

JONATHAN ADLER MILANO

755

16-Light Chandelier

16 - 25W Max.
Bulb Type: G16.5, Candelabra Base
Direct Wire
Polished Brass Finish
Lucite Accents
Susp. Hardware: 1 pc. 5/8" x 12" Extensions
& 6 Ft. of Chain

FINISH OPTION:
S755 Polished Nickel

Jonathan Adler Antwerp



768

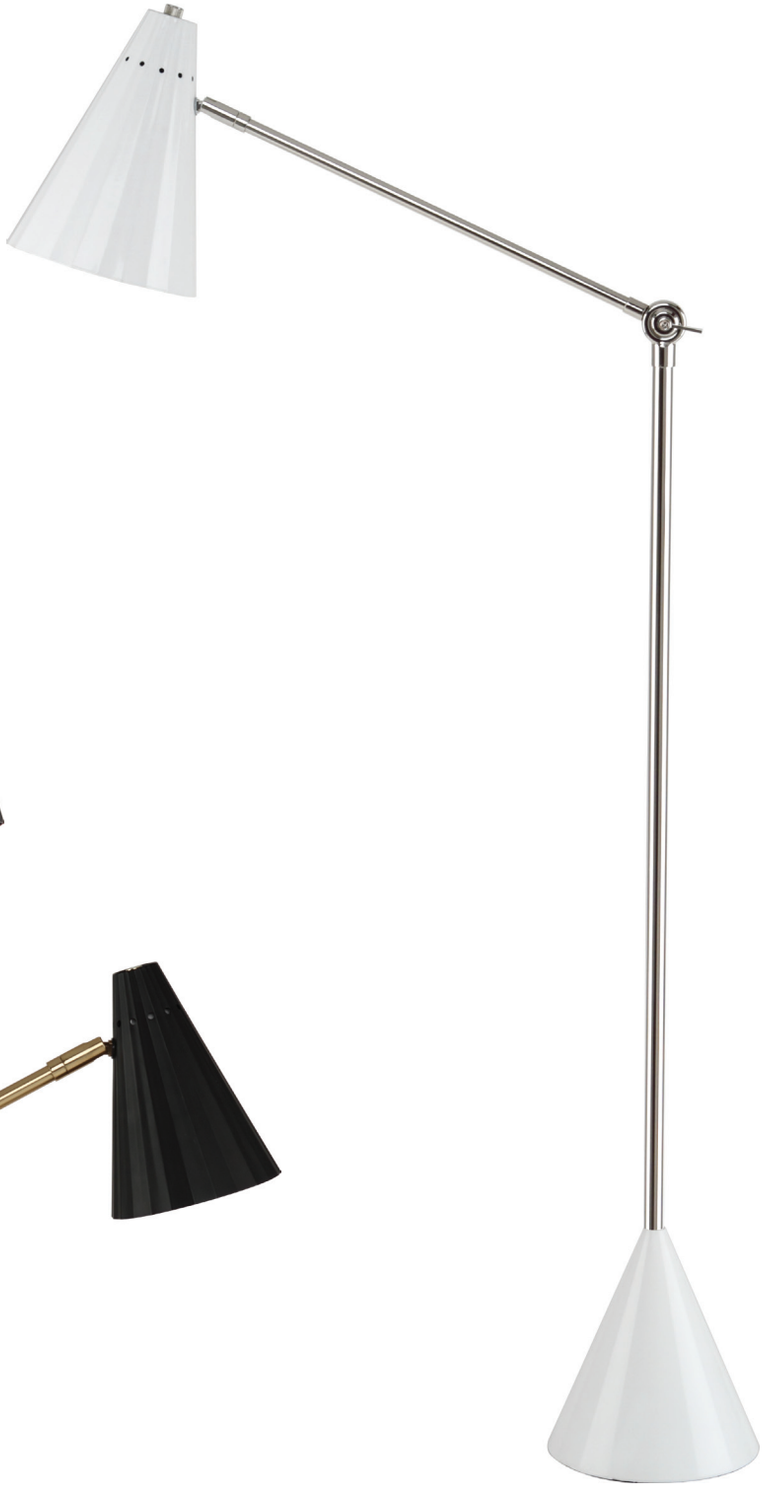

S766



765

Jonathan Adler Antwerp

JONATHAN ADLER ANTWERP

765

Task Table Lamp

1 - 40W Max.
Bulb Type: A
Switch: Hi-Lo Line Switch
Antique Brass Finish
Black Powder Coat Accents
Adjustable Faceted Metal Shade

FINISH OPTION:
S765 Polished Nickel
White Powder Coat Accents

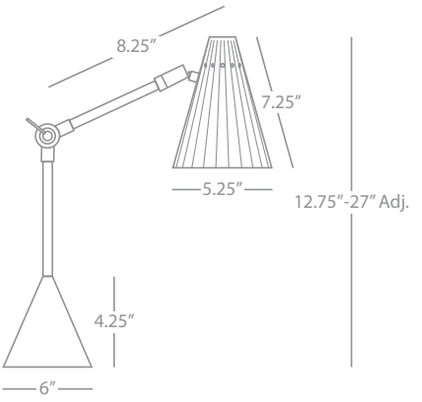

JONATHAN ADLER ANTWERP

S766

Task Floor Lamp

1 - 60W Max.
Bulb Type: A
Switch: Hi-Lo
Polished Nickel Finish
Powder Coat White Accents
Adjustable Faceted Metal Shade

FINISH OPTION:
766 Antique Brass
Black Powder Coat Accents

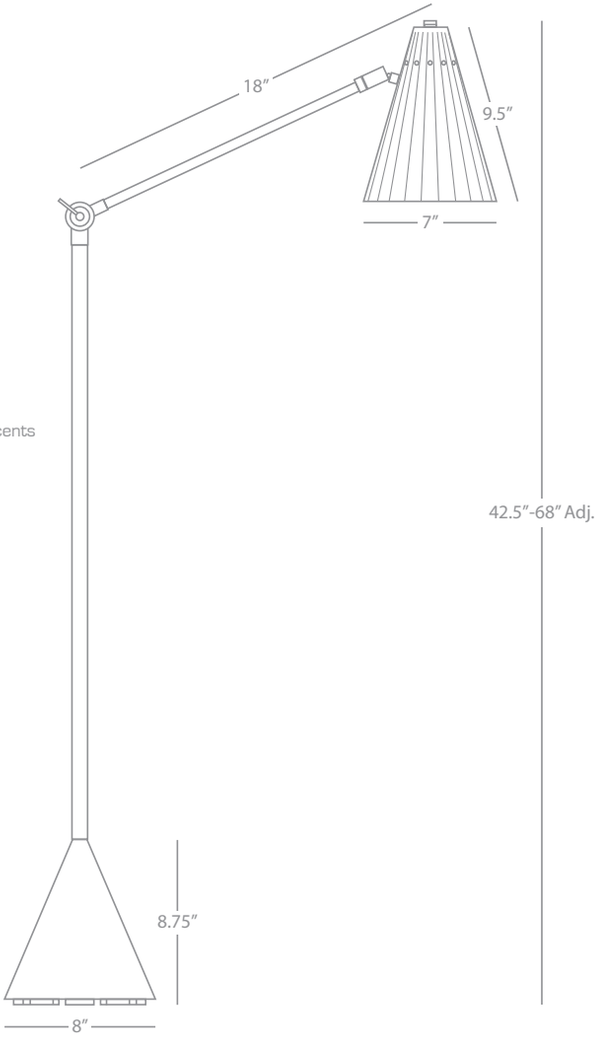

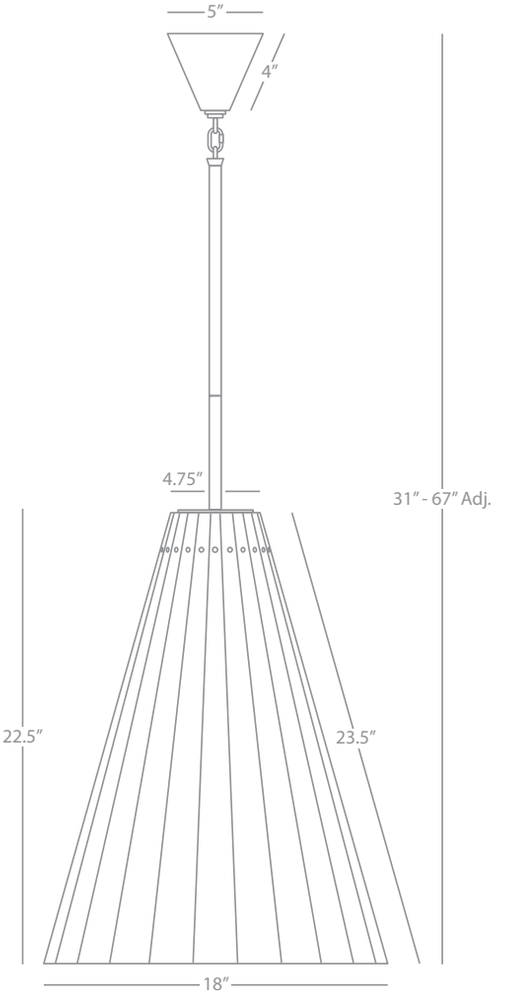

JONATHAN ADLER ANTWERP

768

Pendant

1 - 150W Max.
Bulb Type: A
Direct Wire
Antique Brass Finish
Black Powder Coat Faceted Metal Shade
Susp. Hardware: 3 pcs. 5/8" x 12"
& 1 pc. 5/8" x 6" Extensions

FINISH OPTION:
S768 Polished Nickel
White Powder Coat Accents

Jonathan Adler Rio



779



777



Z779



Z777



S779



S777

Jonathan Adler Rio

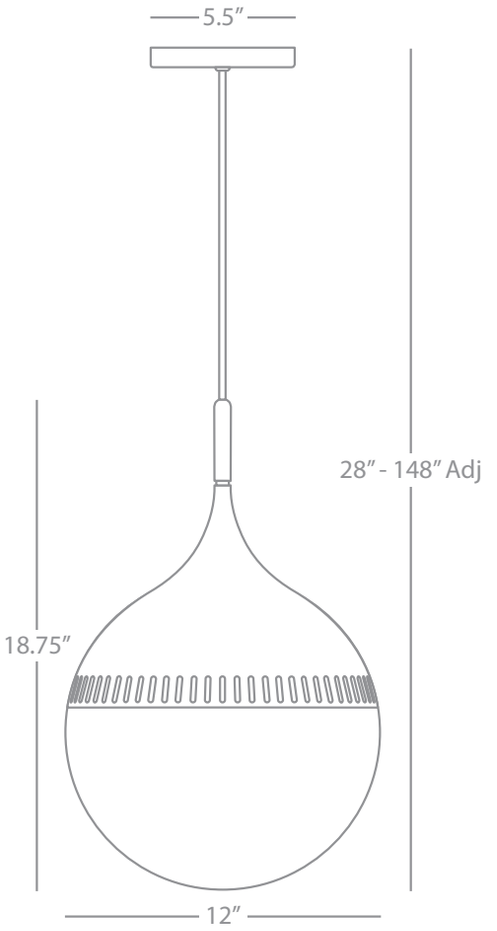

JONATHAN ADLER RIO

779

Pendant

1 - 13W Max.
Bulb Type: GU24 CFL
Direct Wire
Antique Brass Finish
White Glass Shade
Susp. Hardware: 12 Ft. Black Cord
UL Rated Damp Location

FINISH OPTIONS:
S779 Polished Nickel
Z779 Deep Patina Bronze

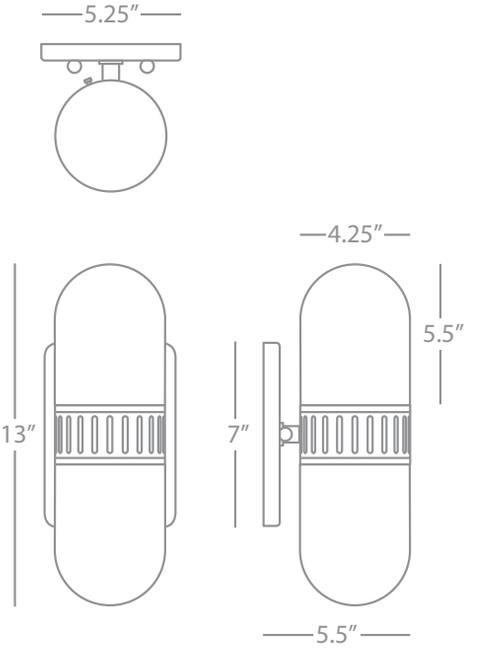

JONATHAN ADLER RIO

777

Wall Sconce

2 - 13W Max.
Bulb Type: GU24 CFL
Direct Wire Only
Antique Brass Finish
White Glass Shades
UL Rated Wet Location

FINISH OPTIONS:
S777 Polished Nickel
Z777 Deep Patina Bronze

Jonathan Adler Rio



790

Jonathan Adler Rio

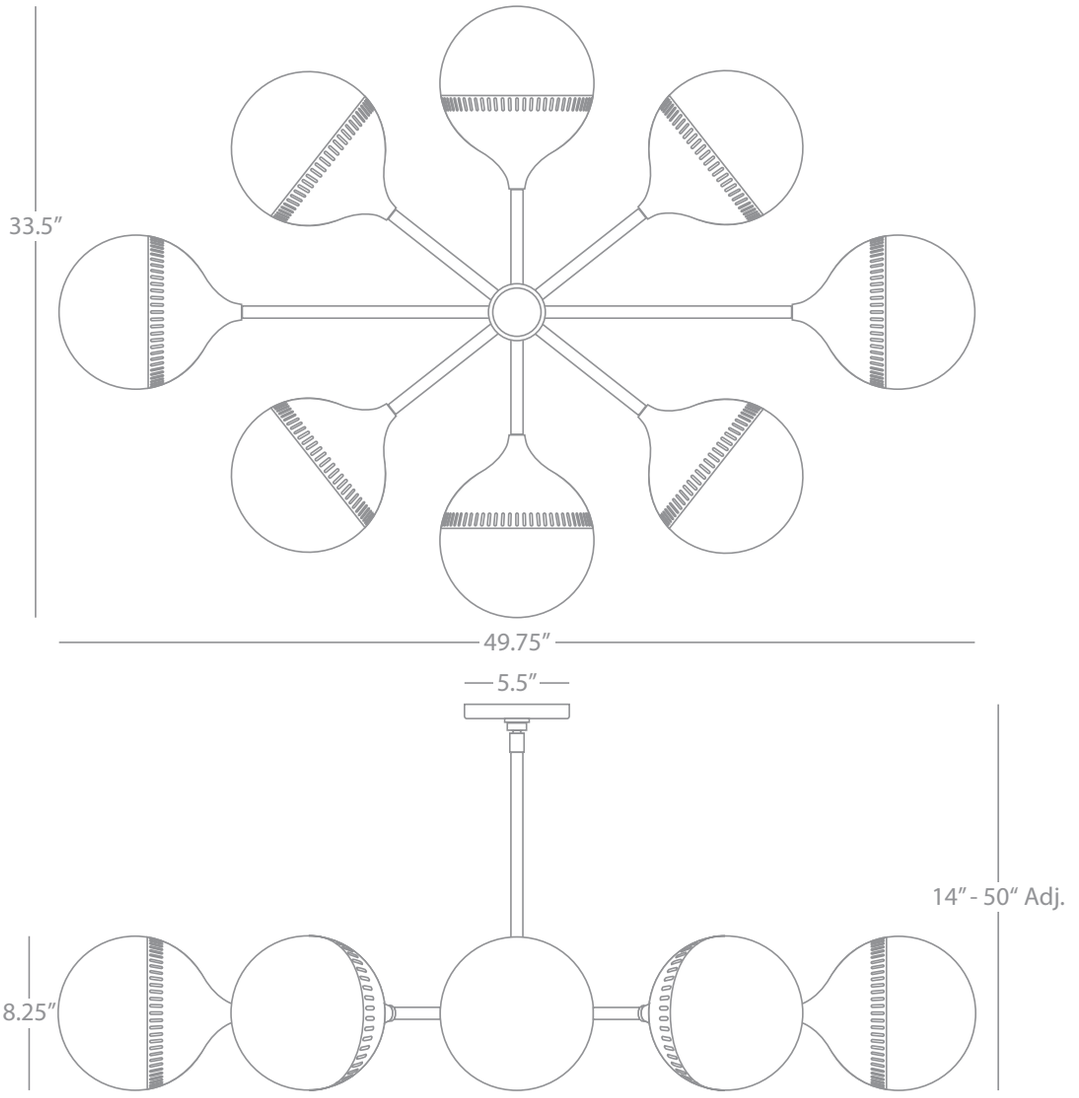

JONATHAN ADLER RIO

790

Oval 8-Light Chandelier

8 - 40W Max.
Bulb Type: B, Medium Base
Direct Wire
Antique Brass Finish
White Glass Shades
Susp. Hardware: 3 pcs. 5/8" x 12" &
1 pc. 5/8" x 6" Extension Rods

FINISH OPTIONS:

S790 Polished Nickel
Z790 Deep Patina Bronze



S791

Jonathan Adler Rio

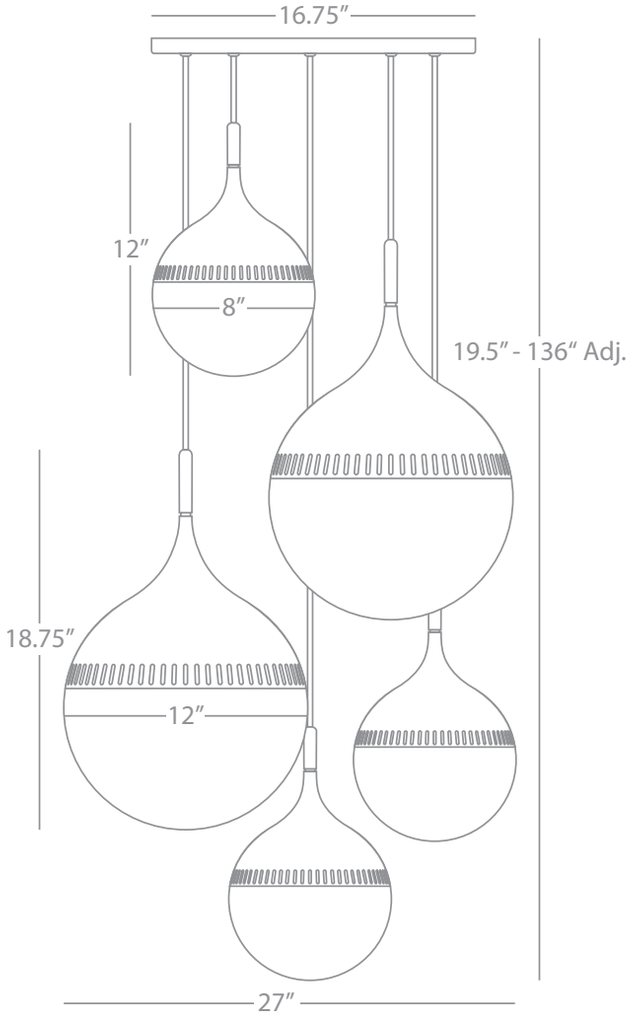

JONATHAN ADLER RIO

S791

Multi-Globe Chandelier

3 - 40W Max. & 2 - 60W Max.
Bulb Type: A
Direct Wire
Polished Nickel Finish
White Glass Shades
Susp. Hardware: 5 pcs. 11 Ft. Black
Fabric Wrapped Cord

FINISH OPTIONS:

791	Antique Brass
Z791	Deep Patina Bronze



S783



S785



S782



781



784

Jonathan Adler Ojai

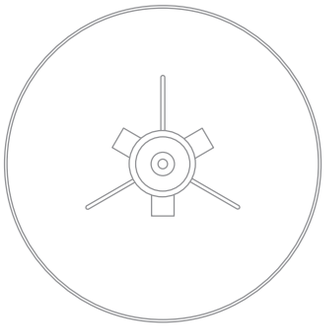

JONATHAN ADLER OJAI

S783

Pendant

3 - 100W Max.
Bulb Type: A
Direct Wire
Polished Nickel Finish w/
Dark Walnut Finished Wood Accents
Oyster Linen Shade
Susp. Hardware: 1 pc. 5/8" x 6" & 3 pcs. 5/8" x 12" Extensions

FINISH OPTION:
783 Aged Brass w/
Walnut Finished Accents

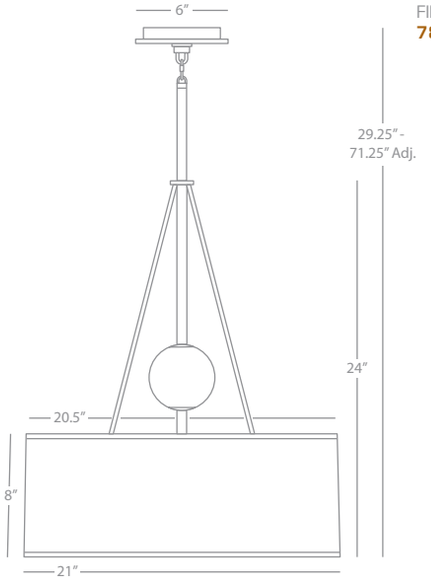

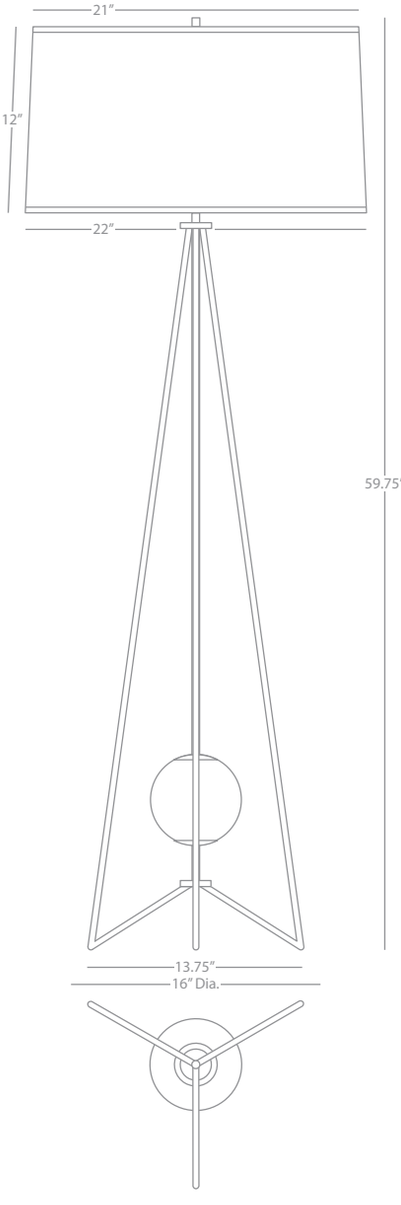

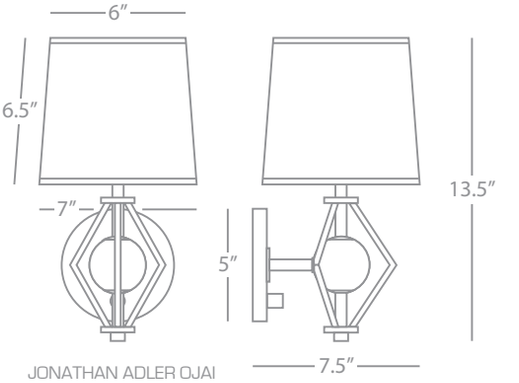

JONATHAN ADLER OJAI

S785

Wall Sconce

1 - 60W Max.
Bulb Type: B, Candelabra
Switch: Hi-Lo Dimming
24" Cord Cover/Direct Wire
Polished Nickel Finish w/
Dark Walnut Finished Wood Accents
Oyster Linen Shade

FINISH OPTION:
785 Aged Brass w/
Walnut Finished Accents

JONATHAN ADLER OJAI

S782

Floor Lamp

1 - 150W Max.
Bulb Type: A
Switch: Hi-Lo Dimming
Polished Nickel Finish w/
Dark Walnut Finished Wood Accents
Oyster Linen Shade

FINISH OPTION:
782 Aged Brass w/
Walnut Finished Accents

JONATHAN ADLER OJAI

784

Side Table

19.75" Dia. Top
Aged Brass Finish w/
Walnut Finished Wood Accents

FINISH OPTION:
S784 Polished Nickel w/
Dark Walnut Finished Accents

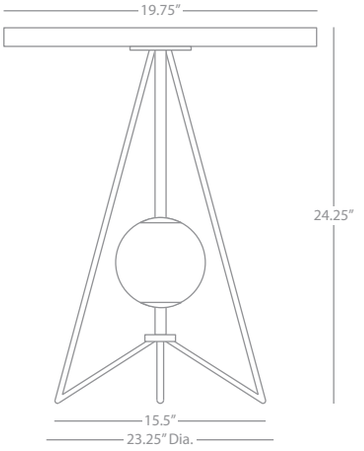

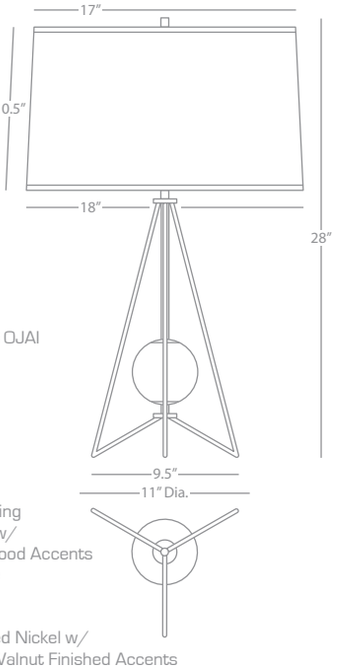

JONATHAN ADLER OJAI

781

Table Lamp

1 - 150W Max.
Bulb Type: A
Switch: Hi-Lo Dimming
Aged Brass Finish w/
Walnut Finished Wood Accents
Oyster Linen Shade

FINISH OPTION:
S781 Polished Nickel w/
Dark Walnut Finished Accents

Jonathan Adler Harlequin



787



786



S786



S787

Jonathan Adler Harlequin

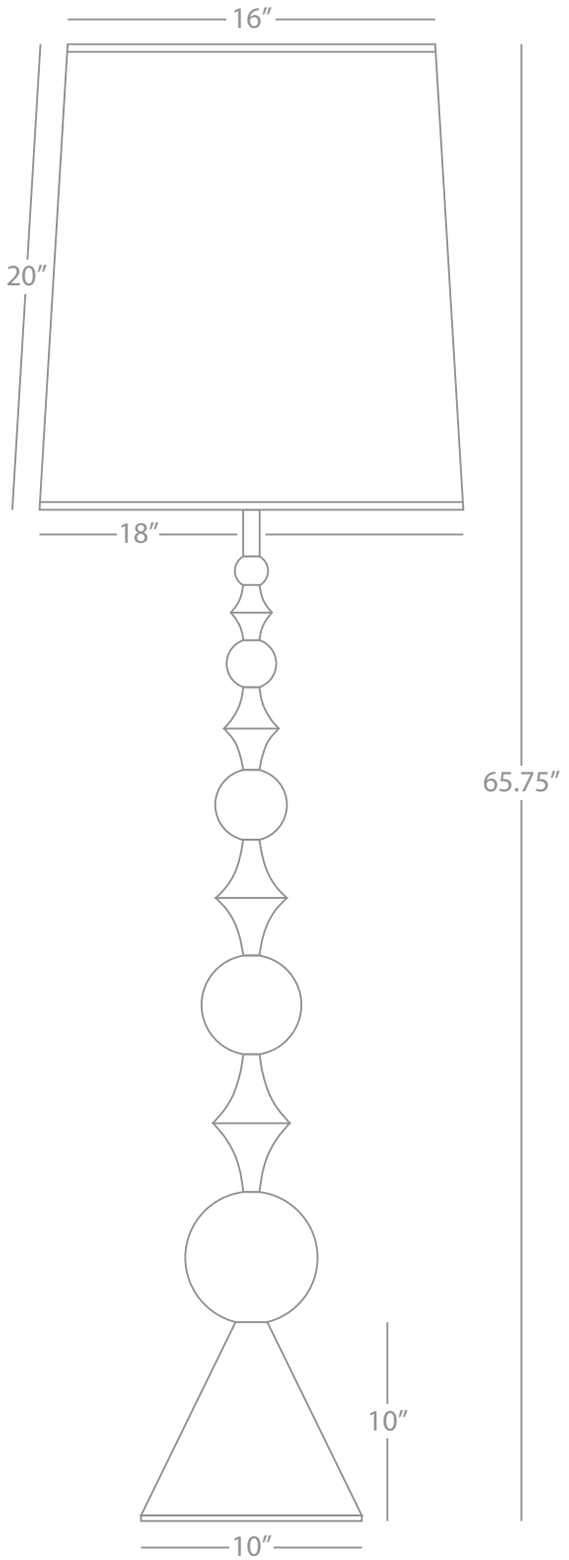

JONATHAN ADLER HARLEQUIN

786

Table Lamp

1 - 150W Max.
Bulb Type: A
Switch: Hi-Lo Dimming
Antique Brass Finish
Oyster Linen Shade

FINISH OPTION:
S786 Polished Nickel

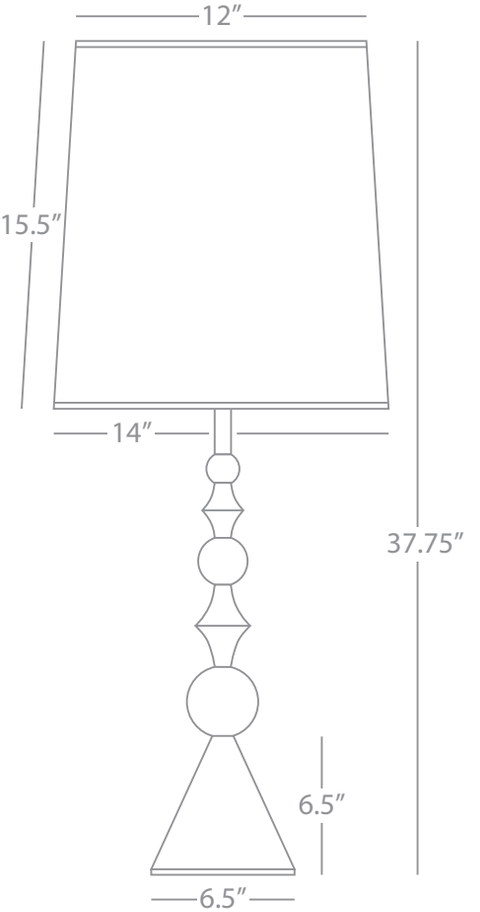

JONATHAN ADLER HARLEQUIN

787

Floor Lamp

1 - 150W Max.
Bulb Type: A
Switch: Hi-Lo Dimming
Antique Brass FInish
Oyster Linen Shade

FINISH OPTION:
S787 Polished Nickel



796



795X

Jonathan Adler Canaan

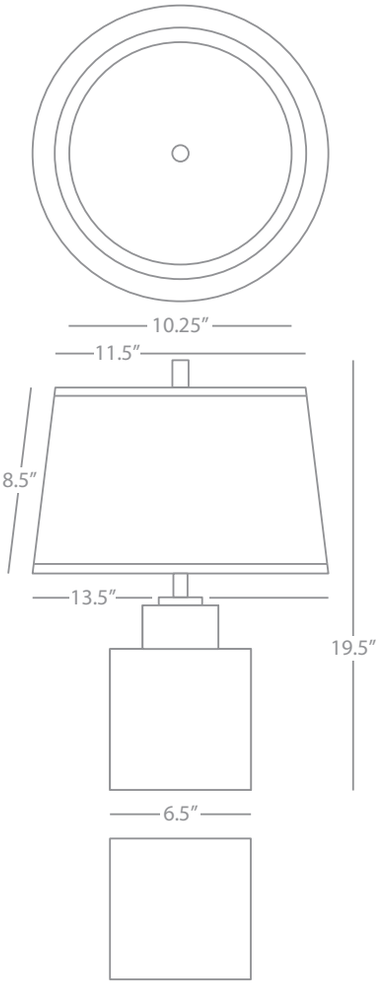

JONATHAN ADLER CANAAN

795X

Small Table Lamp

1 - 100W Max.
Bulb Type: A
Switch: Hi-Lo Dimming
Carrara Marble Base
Antique Brass Accents
Smoke Gray Fabric Shade w/
Perforated Metal Top Diffuser

SHADE OPTION:
795 Oyster Linen

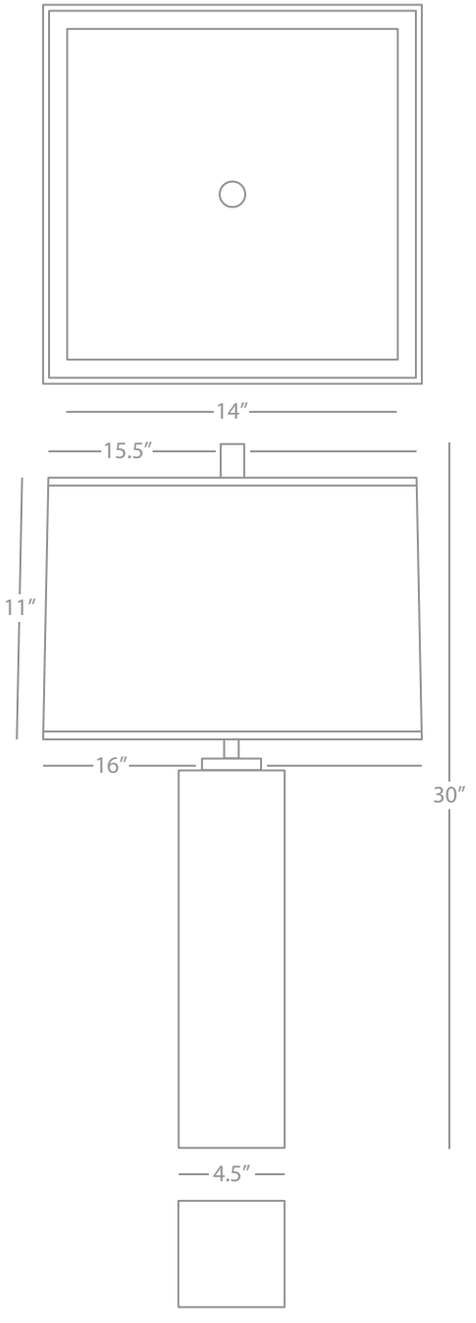

JONATHAN ADLER CANAAN

796

Table Lamp

1 - 150W Max.
Bulb Type: A
Switch: Hi-Lo Dimming
Carrara Marble Base
Antique Brass Accents
Square Oyster Linen Shade w/
Perforated Metal Top Diffuser

SHADE OPTION:
796X Smoke Gray Fabric



BK807



S806

805



BK805

Jonathan Adler St. Germain

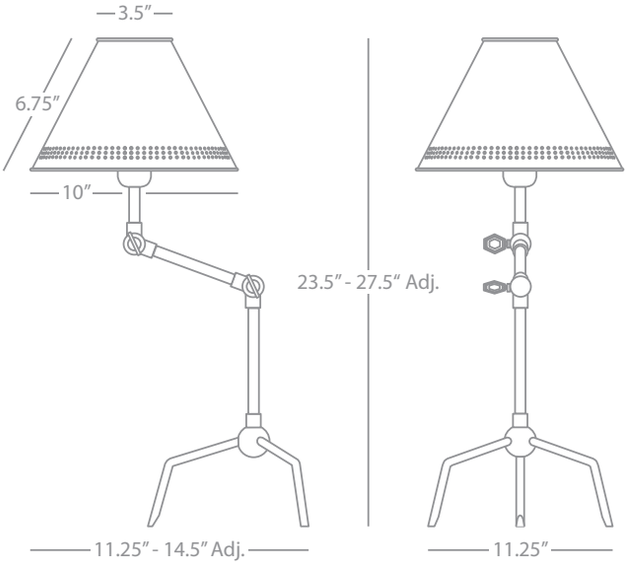

JONATHAN ADLER ST. GERMAIN

S806

Table Lamp

1 - 60W Max.
Bulb Type: B, Candelabra
Switch: Hi-Lo Line Switch
Polished Nickel Finish
Metal Shade w/ Perforated Design

FINISH OPTIONS:

806	Polished Brass
BK806	Polished Brass Satin Black Accents

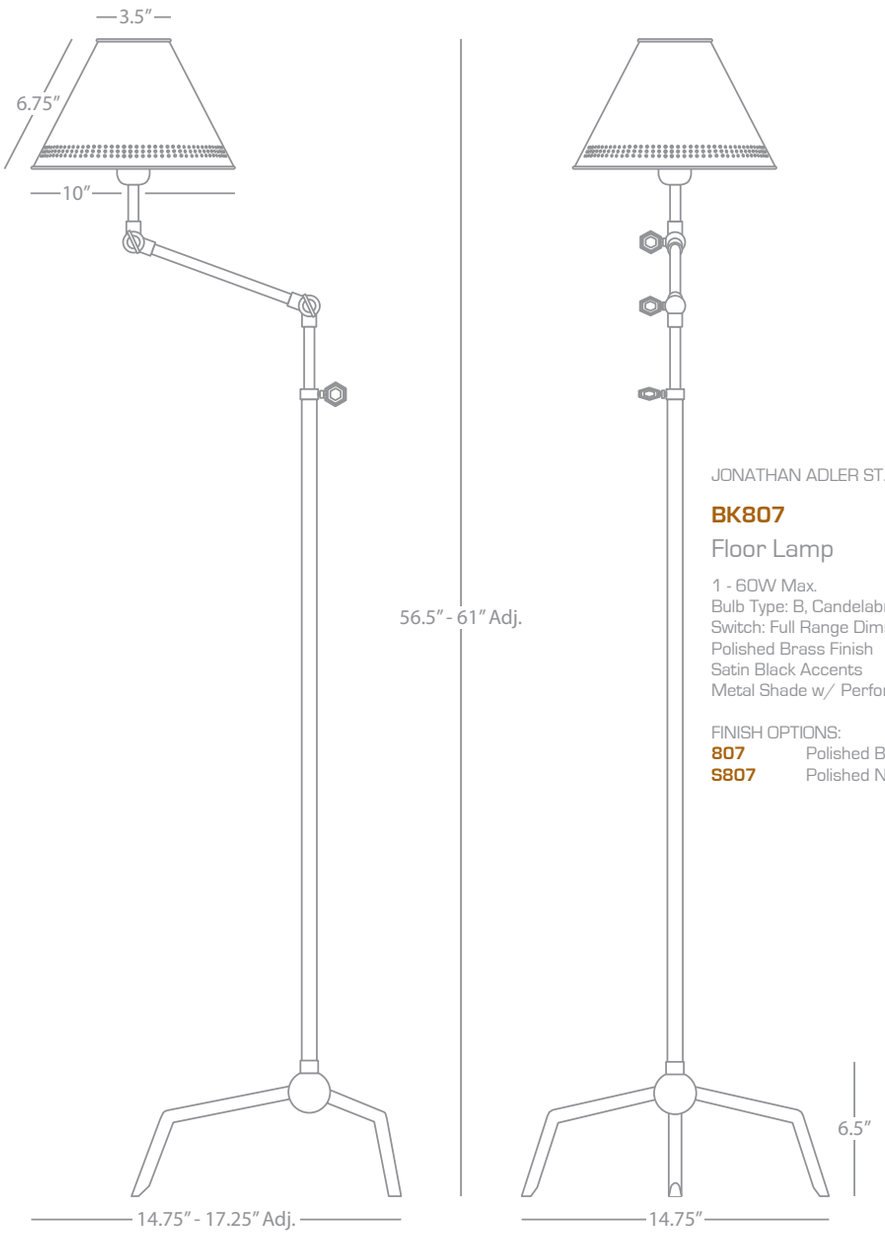

JONATHAN ADLER ST. GERMAIN

BK807

Floor Lamp

1 - 60W Max.
Bulb Type: B, Candelabra
Switch: Full Range Dimmer Foot Switch
Polished Brass Finish
Satin Black Accents
Metal Shade w/ Perforated Design

FINISH OPTIONS:

807	Polished Brass
S807	Polished Nickel

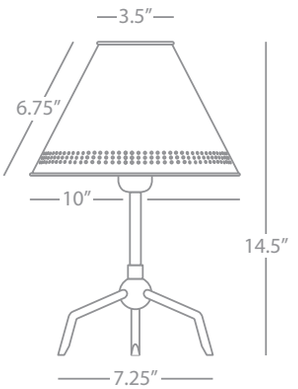

JONATHAN ADLER ST. GERMAIN

805

Accent Lamp

1 - 60W Max.
Bulb Type: B, Candelabra
Switch: Hi-Lo Line Switch
Polished Brass Finish
Metal Shade w/ Perforated Design

FINISH OPTIONS:

BK805	Polished Brass Satin Black Accents
S805	Polished Nickel

Jonathan Adler Barcelona



BK840



LA840



GN842



WH841



RB841

Jonathan Adler Barcelona

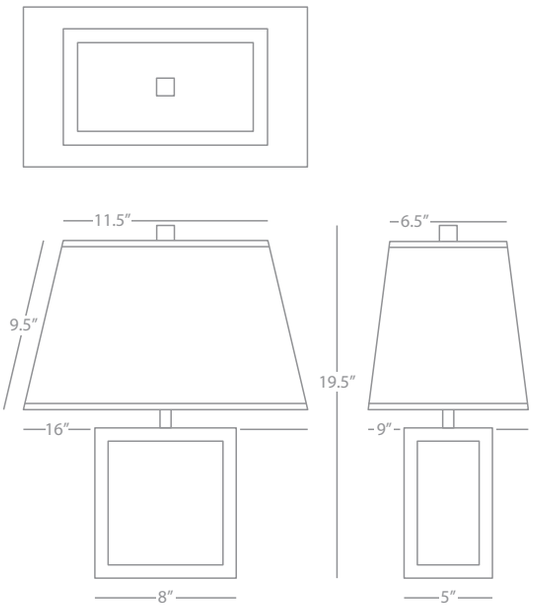

JONATHAN ADLER BARCELONA

BK840

Accent Lamp

1 - 100W Max.
Bulb Type: A
Switch: Hi-Lo Dimming
Polished Brass Finish
Black Opaque Acrylic Panels
Rectangular Fondine Fabric Shade w/
Perforated Metal Top Diffuser

COLOR OPTIONS:

GN840	Emerald Green Acrylic
LA840	Lavender Acrylic
RB840	Royal Blue Acrylic
WH840	White Acrylic

JONATHAN ADLER BARCELONA

GN842

Floor Lamp

1 - 150W Max.
Bulb Type: A
Switch: Hi-Lo Dimming
Polished Brass Finish
Emerald Green Opaque Acrylic Panels
Square Fondine Fabric Shade w/
Perforated Metal Top Diffuser

COLOR OPTIONS:

BK842	Black Acrylic
LA842	Lavender Acrylic
RB842	Royal Blue Acrylic
WH842	White Acrylic

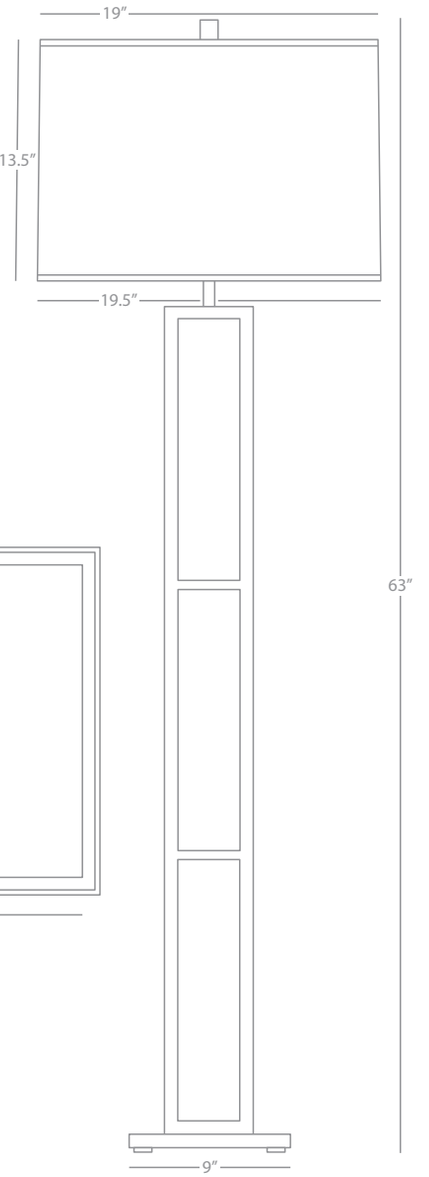

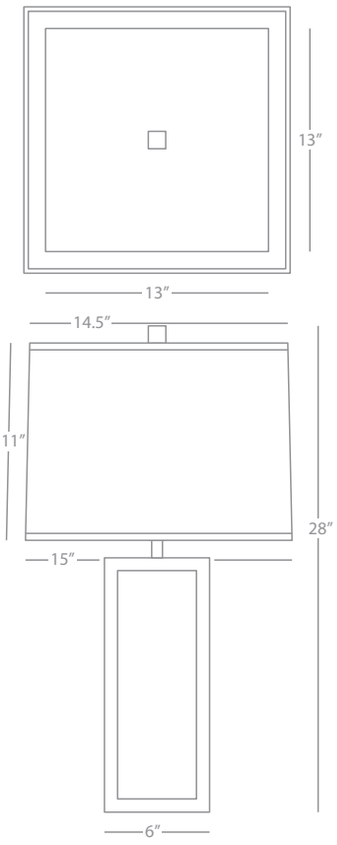

JONATHAN ADLER BARCELONA

RB841

Table Lamp

1 - 150W Max.
Bulb Type: A
Switch: Hi-Lo Dimming
Polished Brass Finish
Royal Blue Opaque Acrylic Panels
Square Fondine Fabric Shade w/
Perforated Metal Top Diffuser

COLOR OPTIONS:

BK841	Black Acrylic
GN841	Emerald Green Acrylic
LA841	Lavender Acrylic
WH841	White Acrylic



S866



865

Jonathan Adler Vienna

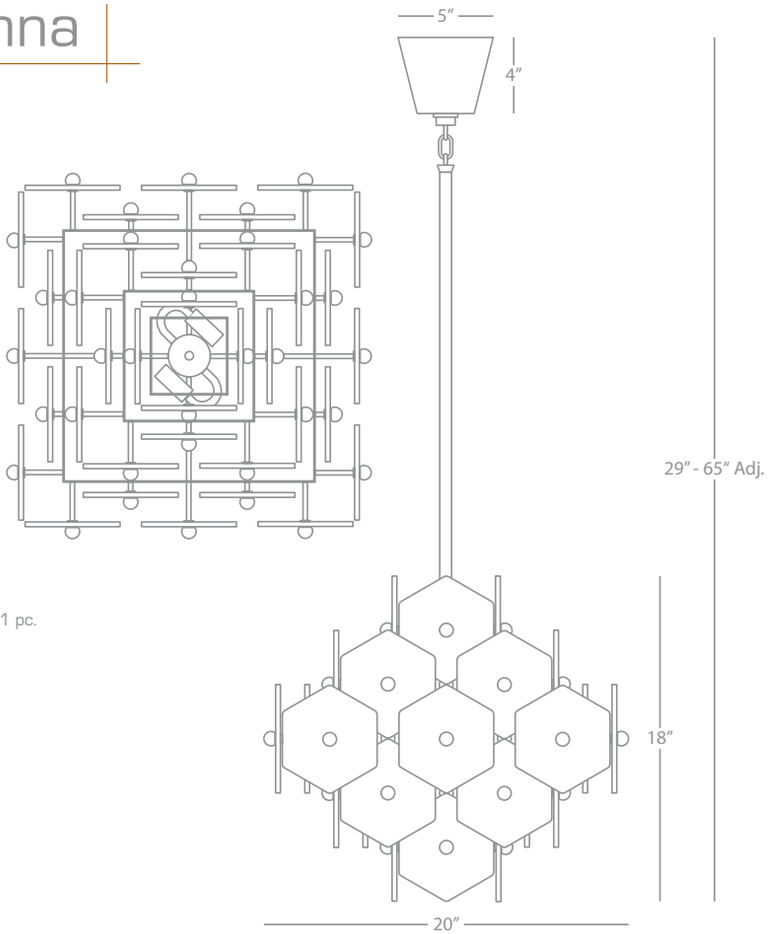

JONATHAN ADLER VIENNA

S866

Small Chandelier

4 - 60W Max.
Bulb Type: B, Candelabra
Direct Wire
Polished Nickel Finish
White Pulegoso Glass
Susp. Hardware: 2 pcs. 5/8" x 12" & 1 pc. 5/8" x 6" Extensions

FINISH OPTION:
866 Antique Brass

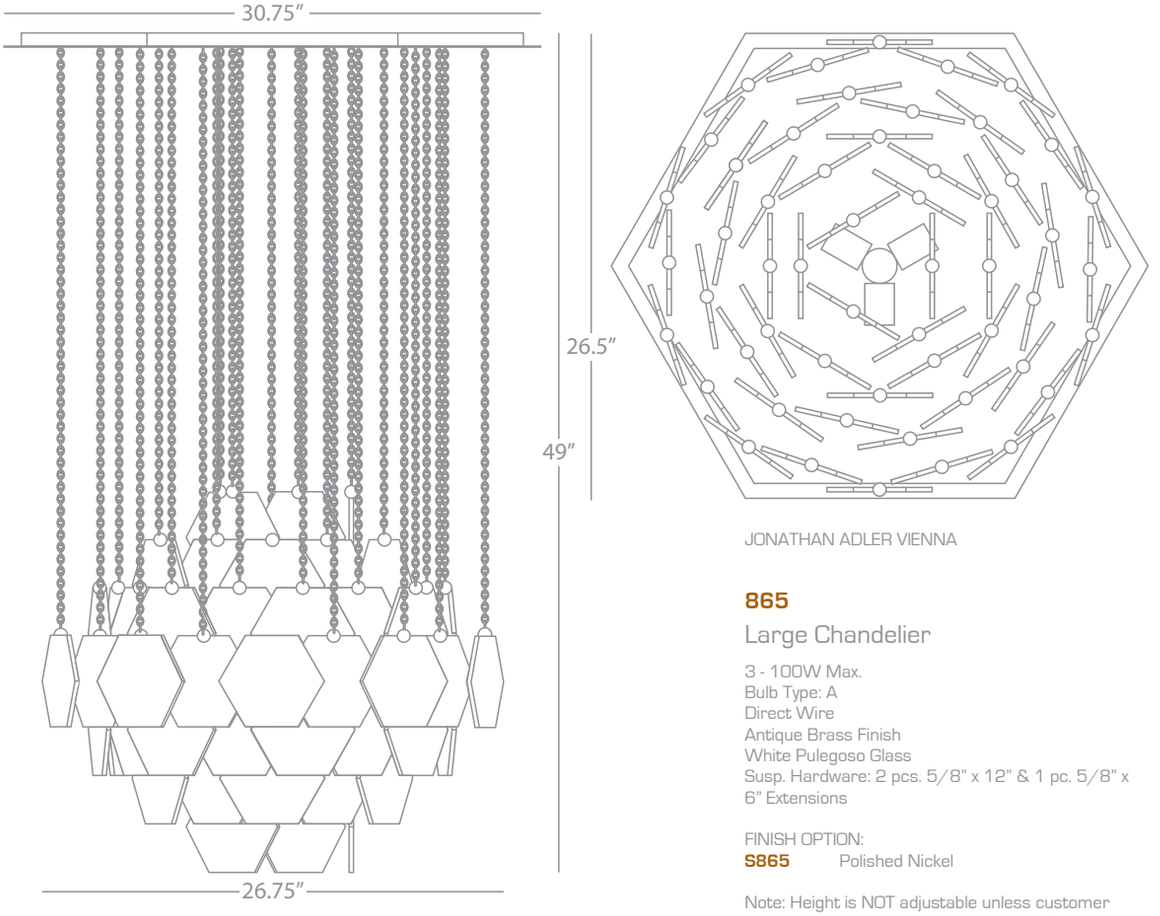

JONATHAN ADLER VIENNA

865

Large Chandelier

3 - 100W Max.
Bulb Type: A
Direct Wire
Antique Brass Finish
White Pulegoso Glass
Susp. Hardware: 2 pcs. 5/8" x 12" & 1 pc. 5/8" x 6" Extensions

FINISH OPTION:
S865 Polished Nickel

Note: Height is NOT adjustable unless customer wants to shorten each individual piece of chain.



Photograph courtesy of The Colonial Williamsburg Foundation

WILLIAMSBURG

Trend meets tradition in the WILLIAMSBURG collection. Inspired by 18th-century furniture patterns in rare books, architectural details in the "Revolutionary City," and decorative details and colors in the vast design archive of the Colonial Williamsburg Foundation, Robert Abbey's talented design team has developed lamps and fixtures with timeless style and contemporary appeal. They've channeled global chic from England's 18th-century trade goods and paired Asian elegance with urns that represent the classical foundations of British and American architectural heritage.

WILLIAMSBURG is the brand of The Colonial Williamsburg Foundation, the large not-for-profit organization that keeps history alive by maintaining the country's oldest and largest outdoor history museum. Here, visionaries like Thomas Jefferson and Patrick Henry debated the promise–and perils–of a revolution that would change the course of history and lead to the founding of the United States of America. Sales of WILLIAMSBURG products support the mission of historical education, preservation, and the nurture of active citizen engagement.

Established in 1936, WILLIAMSBURG invented licensing of museum-based home furnishings. Today they collaborate with over 40 licensees, including Robert Abbey, Inc., Benjamin Moore, and Global Views, to offer classic American style for the way we live today. To learn more about the licensing program, visit www.WILLIAMSBURGbrand.com. To learn more about The Colonial Williamsburg Foundation, visit www.colonialwilliamsburg.com.

© 2015 The Colonial Williamsburg Foundation
WILLIAMSBURG is a trademark of The Colonial Williamsburg Foundation.



3025



351

WILLIAMSBURG



315



S346



MT998



Z342

WILLIAMSBURG Ming



S301



S300



300



301

WILLIAMSBURG Ming

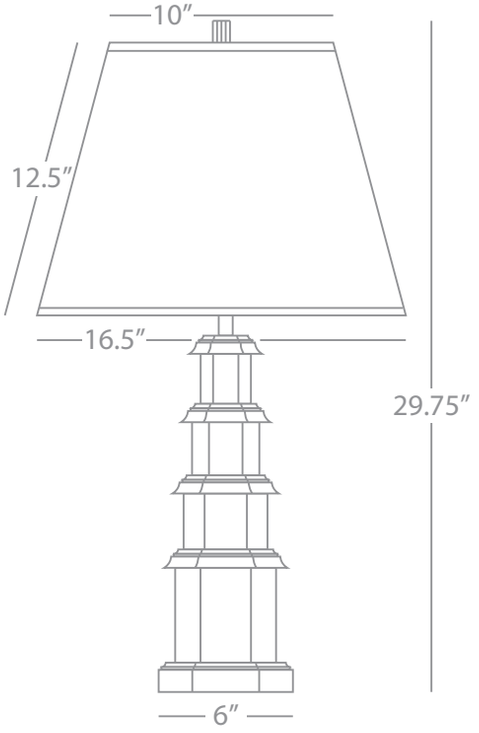

WILLIAMSBURG MING

300

Table Lamp

1 - 150W Max.
Bulb Type: A
Switch: Hi-Lo Dimming
Aged Brass Finish
Clear Lead Crystal
Ivory Silk Shade

FINISH/SHADE OPTION:
S300 Silver Plate
White Silk Shade

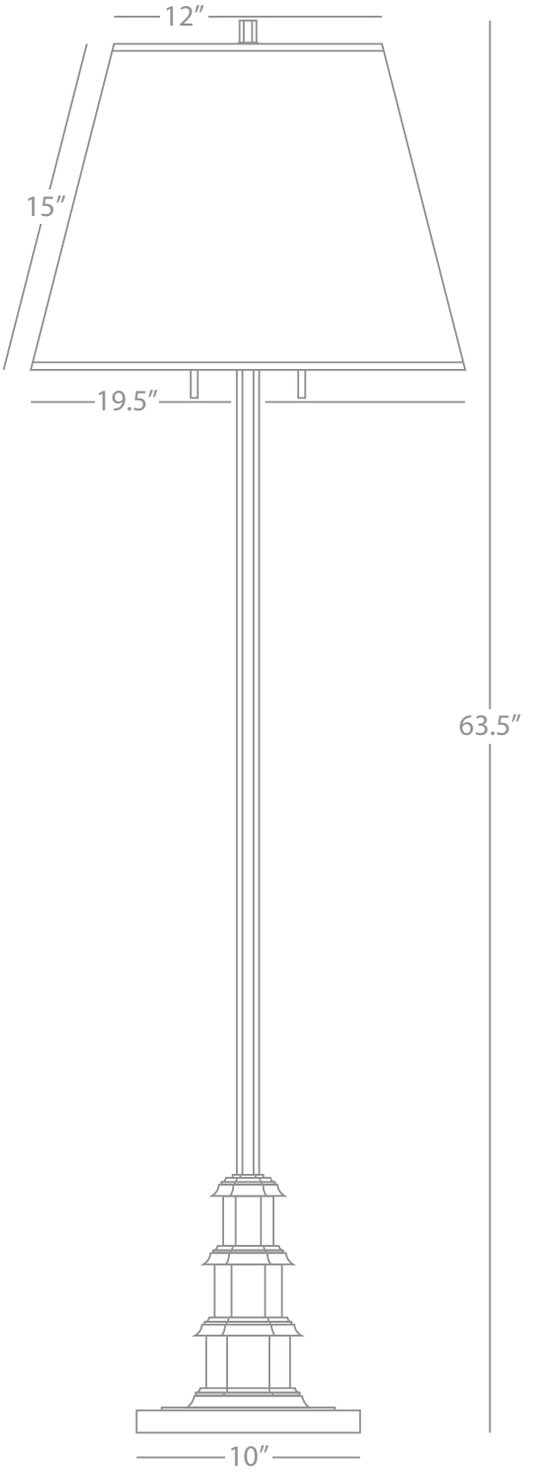

WILLIAMSBURG MING

301

Floor Lamp

2 - 100W Max.
Bulb Type: A
Switch: Hi-Lo Pull Chains
Aged Brass Finish
Clear Lead Crystal
Ivory Silk Shade

FINISH/SHADE OPTION:
S301 Silver Plate
White Silk Shade

WILLIAMSBURG Tucker



302



S302

WILLIAMSBURG Tucker

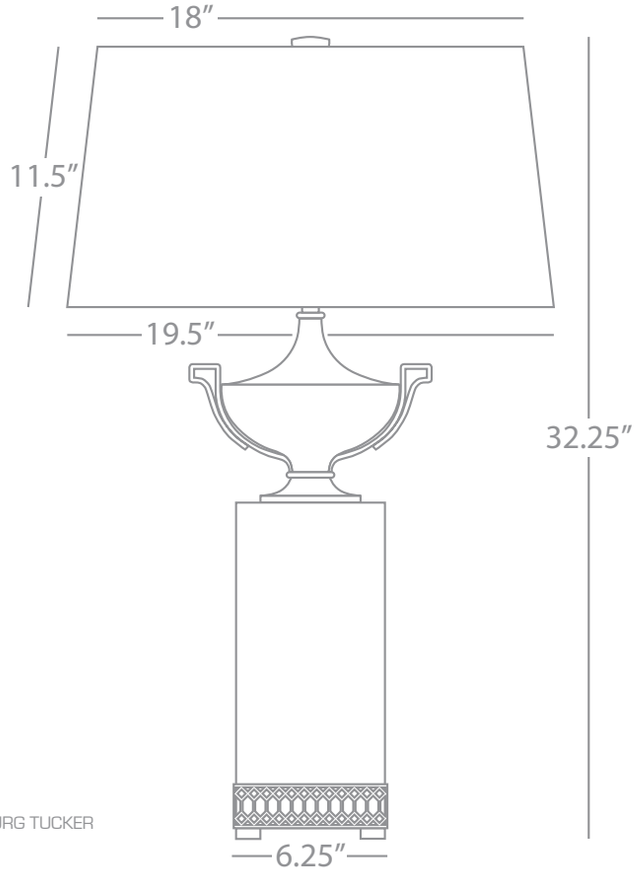

WILLIAMSBURG TUCKER

302

Table Lamp

1 - 150W Max.
Bulb Type: A
Switch: Hi-Lo Dimming
Antique Brass Finish
Ebony Finished Wood Base
Ivory Silk Shade

FINISH/SHADE OPTION:

S302 Silver Plate
White Silk Shade



305

WILLIAMSBURG Nelson

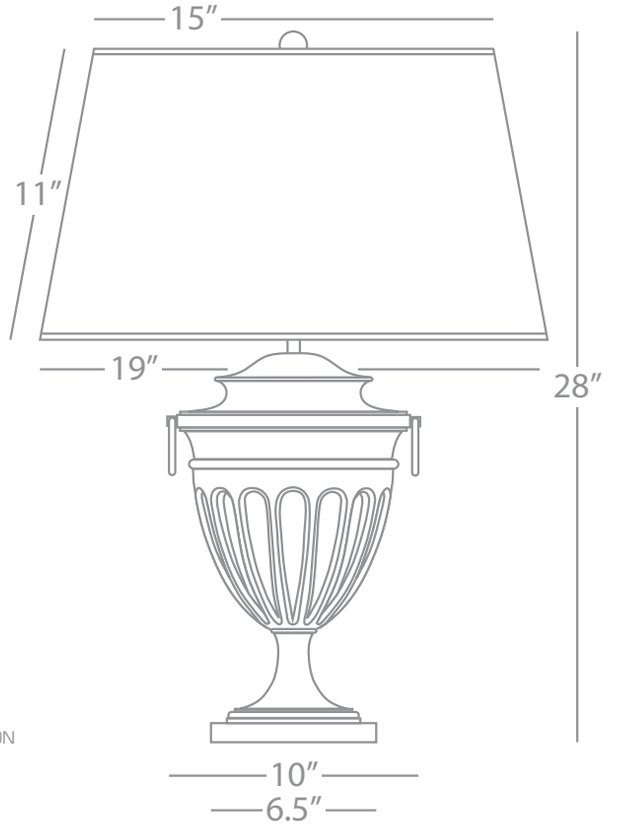

WILLIAMSBURG NELSON

305

Table Lamp

1 - 150W Max.
Bulb Type: A
Switch: Hi-Lo Dimming
Honed Carrara Marble w/
Brushed Nickel Accents
Pearl Gray Fabric Shade



310



310B



311B



311

WILLIAMSBURG Dunmore

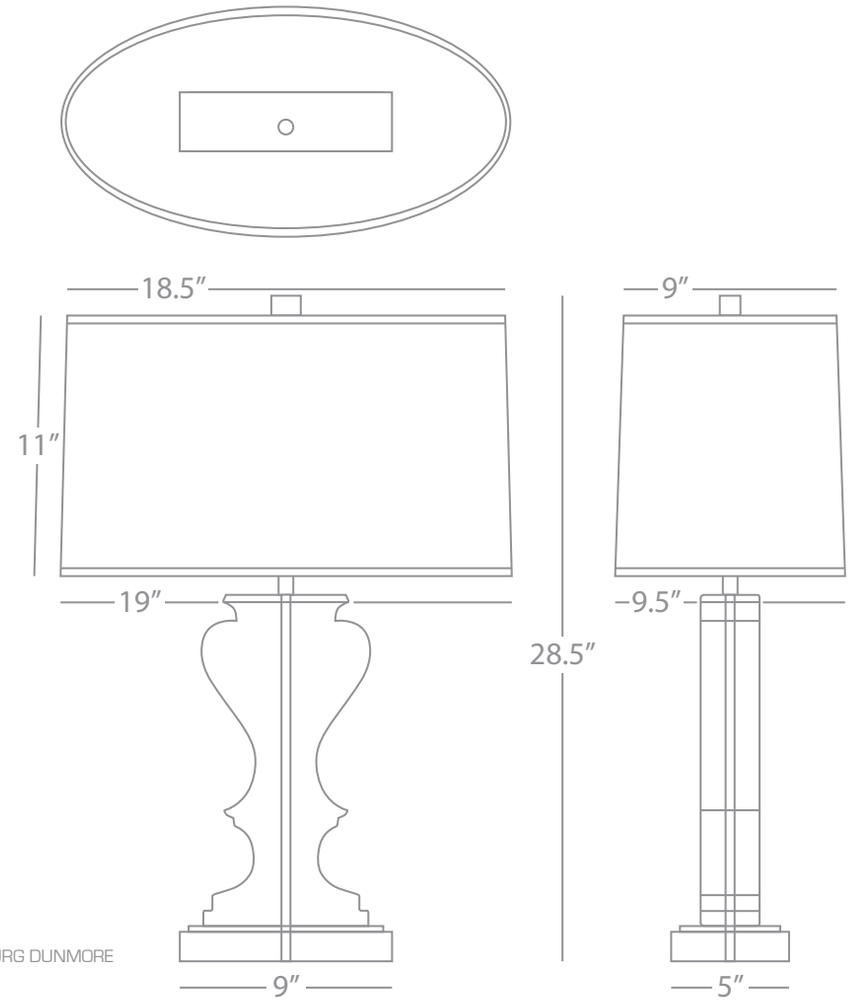

WILLIAMSBURG DUNMORE

310

Table Lamp

1 - 100W Max.
Bulb Type: A
Switch: Hi-Lo Dimming
Clear Lead Crystal
Polished Nickel Accents
White Oval Organza Shade

FINISH/SHADE OPTIONS:

310B	Clear Lead Crystal Black Organza Shade
311	Black Lead Crystal White Organza Shade
311B	Black Lead Crystal Black Organza Shade



312



312B

WILLIAMSBURG Wythe

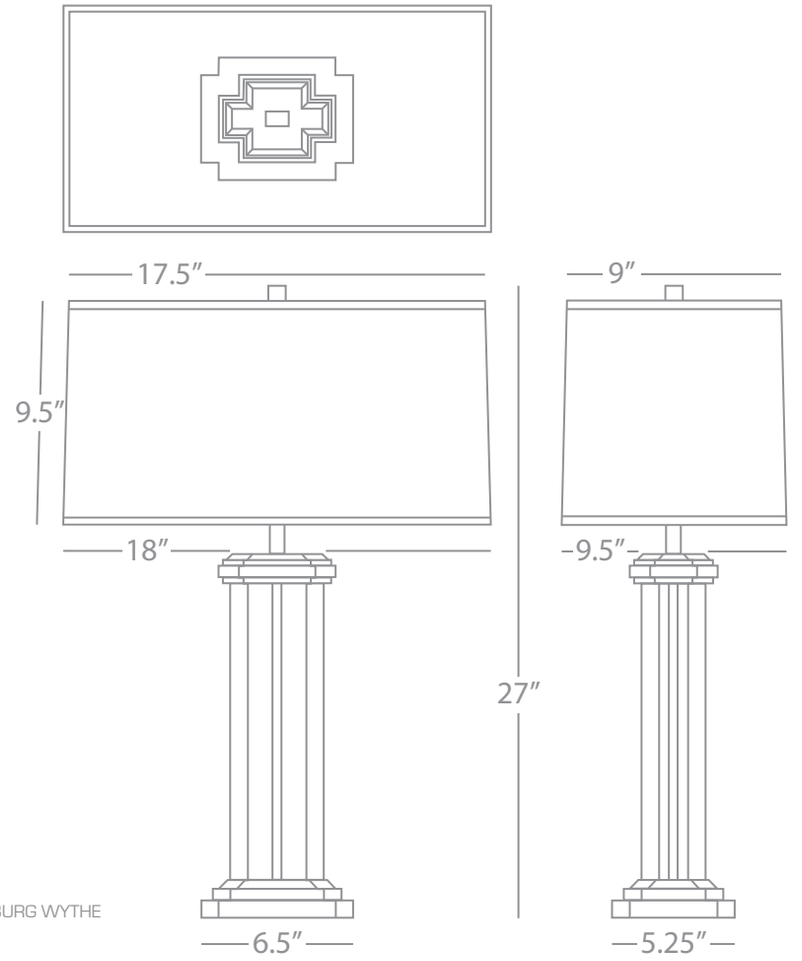

WILLIAMSBURG WYTHE

312

Table Lamp

1 - 150W Max.
Bulb Type: A
Switch: Hi-Lo Dimming
Clear Lead Crystal
Polished Nickel Accents
Rectangular White Silk Shade

SHADE OPTION:

312B Black Silk w/ Silver Metallic Lining

WILLIAMSBURG Tayloe



317



325



316

WILLIAMSBURG Tayloe

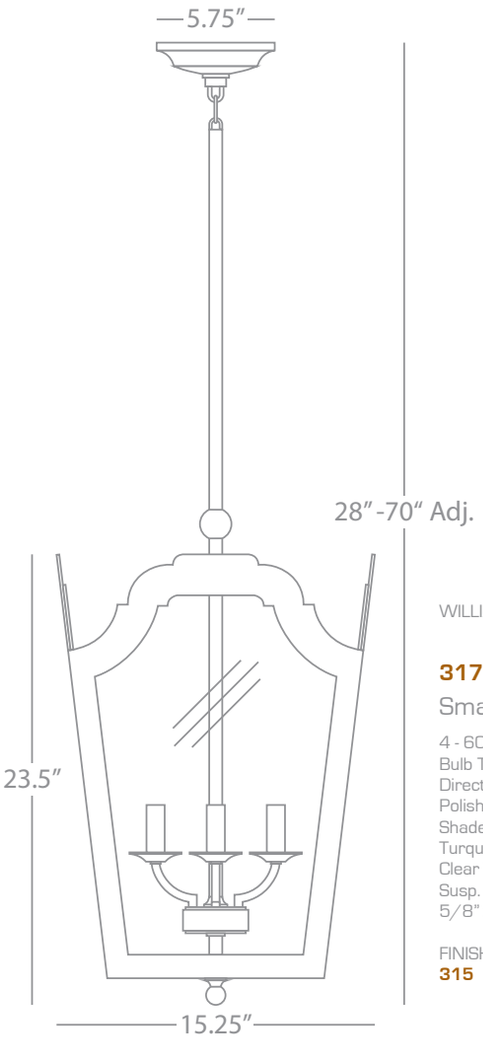

WILLIAMSBURG TAYLOE

317

Small Pendant

4 - 60W Max.
Bulb Type: B, Candelabra
Direct Wire
Polished Nickel Finish
Shade Frame Painted White Outside & Turquoise Inside
Clear Tempered Glass Shade Panels
Susp. Hardware: 3 pcs. 5/8" x 12" & 1pc. 5/8" x 6" Extensions

FINISH OPTION:
315 Polished Nickel
Shade Frame Painted Charcoal Outside & Dragons Blood Inside

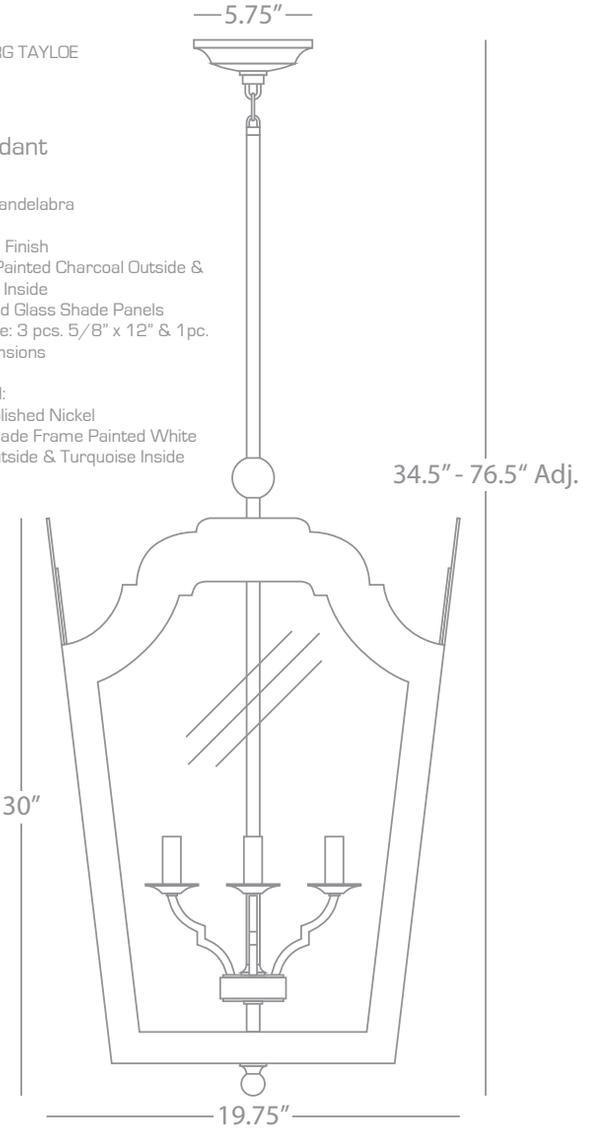

WILLIAMSBURG TAYLOE

316

Large Pendant

4 - 60W Max.
Bulb Type: B, Candelabra
Direct Wire
Polished Nickel Finish
Shade Frame Painted Charcoal Outside & Dragons Blood Inside
Clear Tempered Glass Shade Panels
Susp. Hardware: 3 pcs. 5/8" x 12" & 1pc. 5/8" x 6" Extensions

FINISH OPTION:
318 Polished Nickel
Shade Frame Painted White Outside & Turquoise Inside

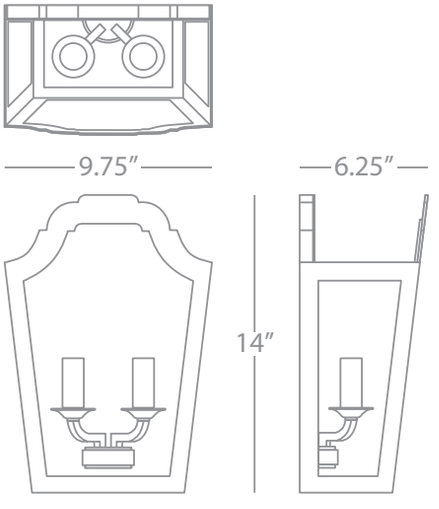

WILLIAMSBURG TAYLOE

325

Wall Sconce

2 - 40W Max.
Bulb Type: B, Candelabra
Direct Wire Only
Polished Nickel Finish
Shade Frame Painted White Outside & Turquoise Inside
Clear Tempered Glass Shade Panels

FINISH OPTION:
326 Polished Nickel
Shade Frame Painted Charcoal Outside & Dragons Blood Inside

WILLIAMSBURG Custis



WB336



WB337



WB338



WB339



WB334



WB335



WB331



WB330



WB333



WB332

WILLIAMSBURG Custis

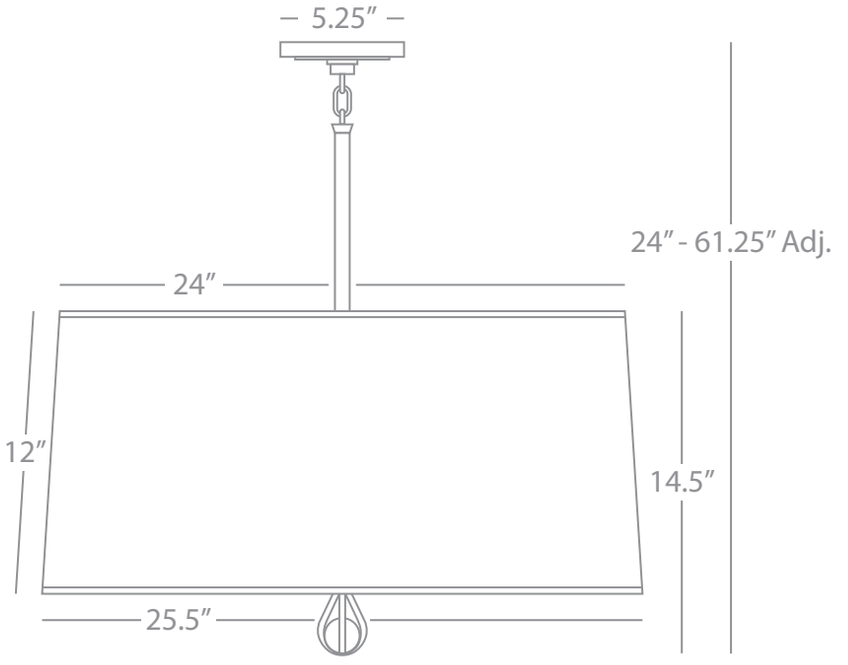

WILLIAMSBURG CUSTIS

WB330

Pendant

3 - 100W Max.
Bulb Type: A
Direct Wire
Polished Nickel Finish
Lead Crystal Finial
Mayo Teal Fabric Shade w/
Carter Gray Lining
13.25" Dia. Polished Nickel Metal Diffuser
Susp. Hardware: 3 pcs. 5/8" x 12" &
1 pc. 5/8" x 6" Extensions

SHADE OPTIONS:

WB331	Carter Gray/Mayo Teal Lining
WB332	Parrot Green/Revolutionary Storm Lining
WB333	Revolutionary Storm/Parrot Green Lining
WB334	Greenhow Grape/Ludwell Lilac Lining
WB335	Ludwell Lilac/Greenhow Grape Lining
WB336	Revolutionary Storm/William of Orange Lining
WB337	William of Orange/Revolutionary Storm Lining
WB338	Richmond Red/Blacksmith Black Lining
WB339	Blacksmith Black/Richmond Red Lining

WILLIAMSBURG Blaikley



B341



S340



C340



Z342

WILLIAMSBURG Blaikley

WILLIAMSBURG BLAIKLEY

C340

Single Sconce

1 - 60W Max.
Bulb Type: A
Direct Wire Only
Polished Chrome Finish
White Cased Glass Shade
Clear Crystal Finial

FINISH OPTIONS:
B340 Brushed Nickel
S340 Polished Nickel
Z340 Deep Patina Bronze

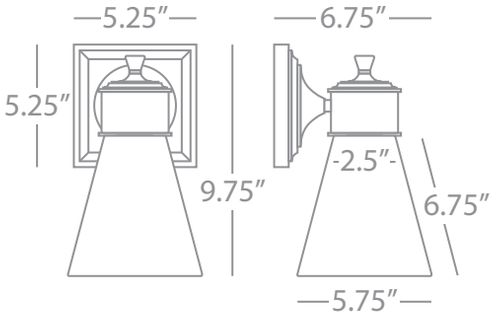

WILLIAMSBURG BLAIKLEY

B341

Double Sconce

2 - 60W Max.
Bulb Type: A
Direct Wire Only
Brushed Nickel Finish
White Cased Glass Shades
Clear Crystal Finials

FINISH OPTIONS:
C341 Polished Chrome
S341 Polished Nickel
Z341 Deep Patina Bronze

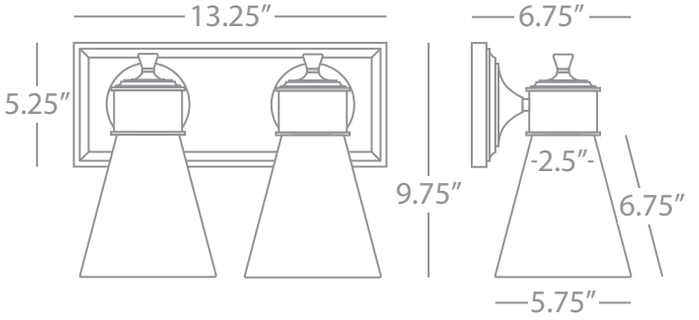

WILLIAMSBURG BLAIKLEY

Z342

Triple Sconce

3 - 60W Max.
Bulb Type: A
Direct Wire Only
Deep Patina Bronze Finish
White Cased Glass Shades
Clear Crystal Finials

FINISH OPTIONS:
B342 Brushed Nickel
C342 Polished Chrome
S342 Polished Nickel

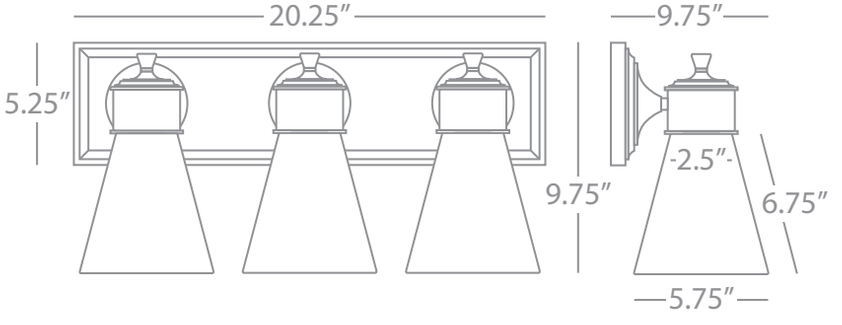

WILLIAMSBURG Wentworth



346



345



S345



S346

WILLIAMSBURG Wentworth

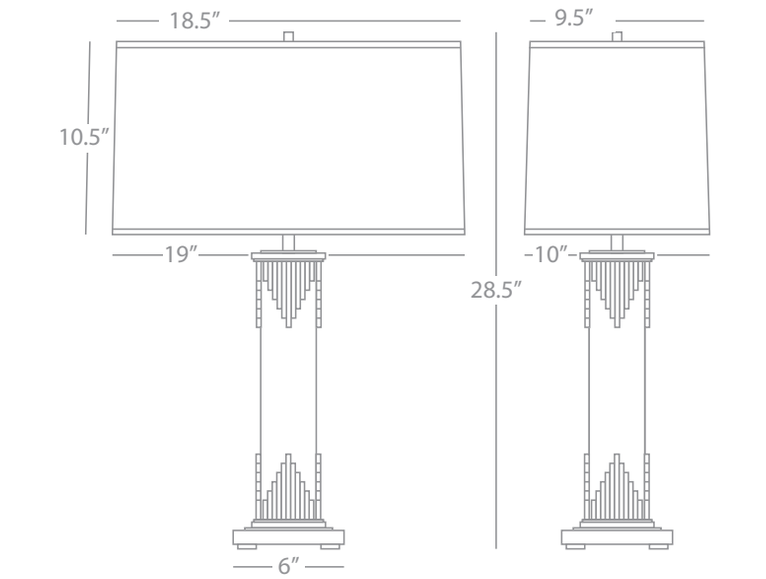

WILLIAMSBURG WENTWORTH

345

Table Lamp

1 - 150W Max.
Bulb Type: A
Switch: Hi-Lo Dimming
Walnut Finished Wood w/
Aged Brass Accents
Rectangular Fondine Fabric Shade

FINISH/SHADE OPTION:
S345 Dark Walnut Finished Wood
Polished Nickel
Ascot White Fabric

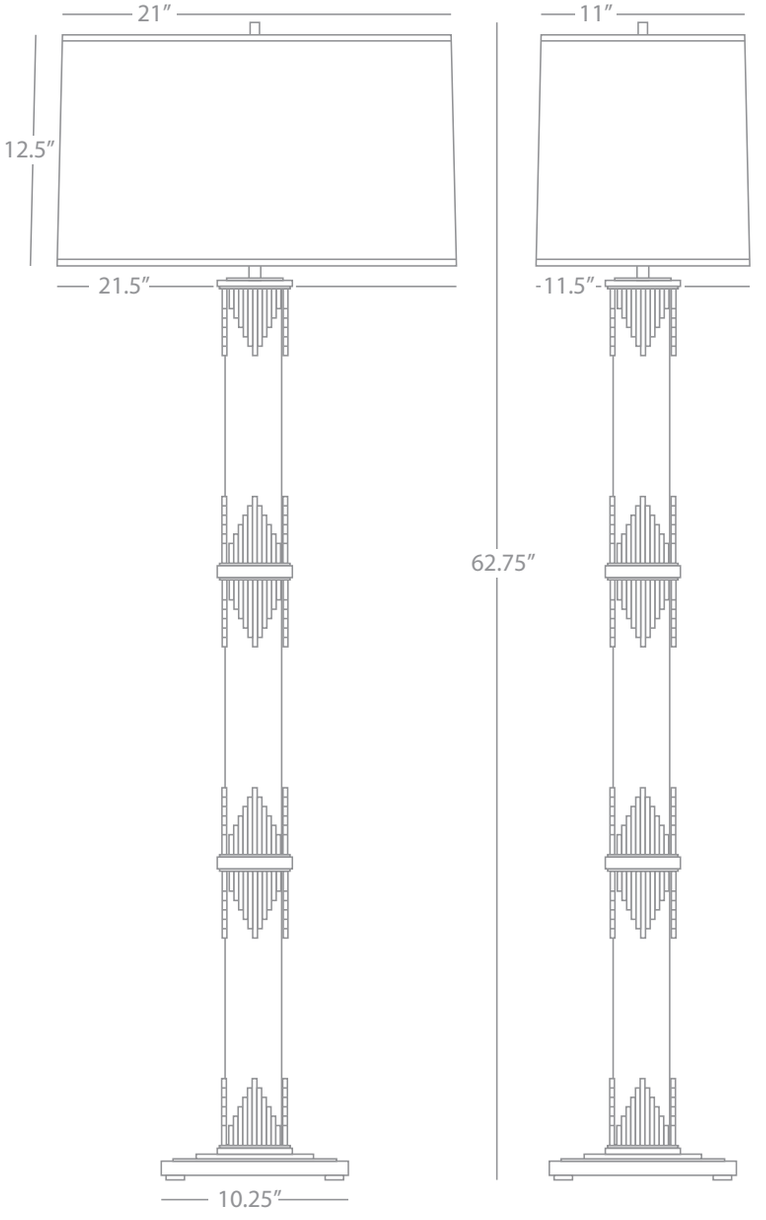

WILLIAMSBURG WENTWORTH

346

Floor Lamp

1 - 150W Max.
Bulb Type: A
Switch: Hi-Lo Dimming
Walnut Finished Wood w/
Aged Brass Accents
Rectangular Fondine Fabric Shade

FINISH/SHADE OPTION:
S346 Dark Walnut Finished Wood
Polished Nickel
Ascot White Fabric



351



355



S350



S353



Z352



Z354

WILLIAMSBURG Lightfoot

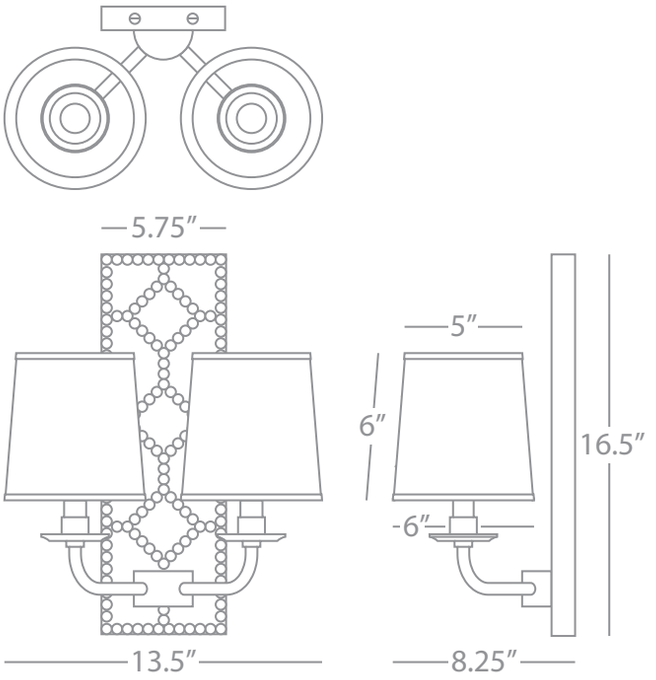

WILLIAMSBURG LIGHTFOOT

S350

Double Sconce

2 - 60W Max.
Bulb Type: B, Candelabra
Direct Wire Only
Backplate Upholstered in English Ochre Leather w/ Nailhead Detail
Polished Nickel Accents
Fondine Fabric Shades

FINISH OPTIONS:
350 Aged Brass Accents
Z350 Deep Patina Bronze Accents

WILLIAMSBURG LIGHTFOOT

351

Double Sconce

2 - 60W Max.
Bulb Type: B, Candelabra
Direct Wire Only
Backplate Upholstered in Dragons Blood Leather w/ Nailhead Detail
Aged Brass Accents
Fondine Fabric Shades

FINISH OPTIONS:
S351 Polished Nickel Accents
Z351 Deep Patina Bronze Accents

WILLIAMSBURG LIGHTFOOT

Z352

Double Sconce

2 - 60W Max.
Bulb Type: B, Candelabra
Direct Wire Only
Backplate Upholstered in Bruton White Leather w/ Nailhead Detail
Deep Patina Bronze Accents
Fondine Fabric Shades

FINISH OPTIONS:
352 Aged Brass Accents
S352 Polished Nickel Accents

WILLIAMSBURG LIGHTFOOT

S353

Double Sconce

2 - 60W Max.
Bulb Type: B, Candelabra
Direct Wire Only
Backplate Upholstered in Mayo Teal Leather w/ Nailhead Detail
Polished Nickel Accents
Fondine Fabric Shades

FINISH OPTIONS:
353 Aged Brass Accents
Z353 Deep Patina Bronze Accents

WILLIAMSBURG LIGHTFOOT

Z354

Double Sconce

2 - 60W Max.
Bulb Type: B, Candelabra
Direct Wire Only
Backplate Upholstered in Carter Gray Leather w/ Nailhead Detail
Deep Patina Bronze Accents
Fondine Fabric Shades

FINISH OPTIONS:
354 Aged Brass Accents
S354 Polished Nickel Accents

WILLIAMSBURG LIGHTFOOT

355

Double Sconce

2 - 60W Max.
Bulb Type: B, Candelabra
Direct Wire Only
Backplate Upholstered in Blacksmith Black Leather w/ Nailhead Detail
Aged Brass Accents
Fondine Fabric Shades

FINISH OPTIONS:
S355 Polished Nickel Accents
Z355 Deep Patina Bronze Accents



S371



Z370



Z373



Z372

WILLIAMSBURG Dickinson

WILLIAMSBURG DICKINSON

S371

Flush Mount

2 - 60W Max.
Bulb Type: A
Direct Wire
Antique Silver Finish
White Glass Shade Panels

FINISH OPTION:
Z371 Deep Patina Bronze

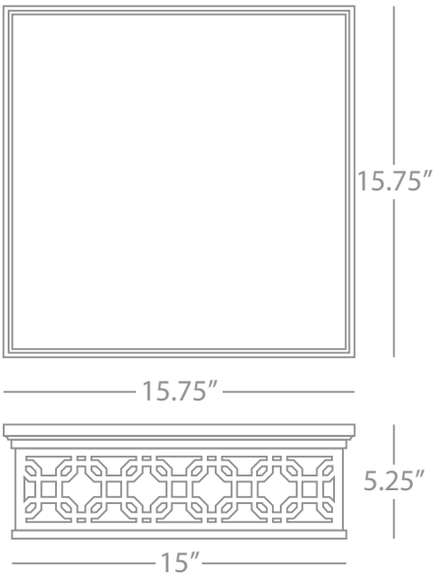

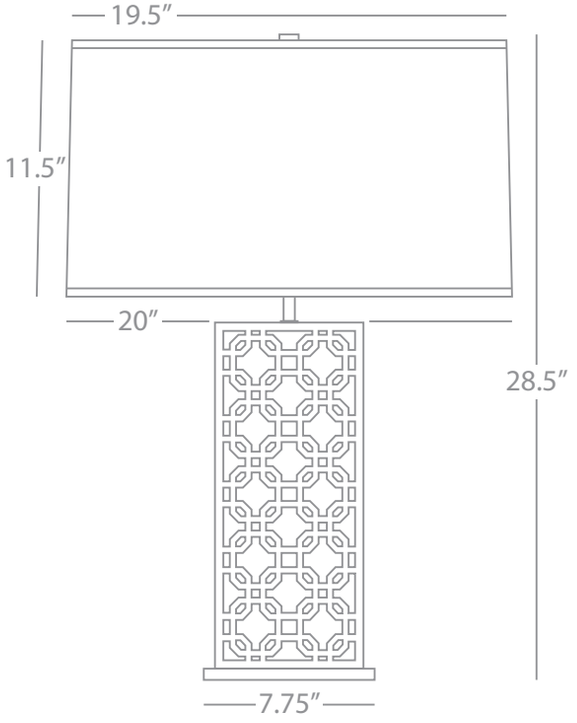

WILLIAMSBURG DICKINSON

Z373

Table Lamp

1 - 150W Max.
Bulb Type: A
Switch: Hi-Lo Dimming
Deep Patina Bronze Finish w/
Antique Silver Accents
Gray Mont Blanc Parchment Shade

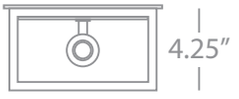

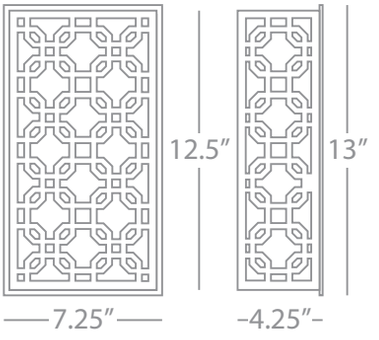

WILLIAMSBURG DICKINSON

Z370

Wall Sconce

1 - 60W Max.
Bulb Type: B, Candelabra
Direct Wire Only
Deep Patina Bronze Finish
White Glass Shade Panels

FINISH OPTION:
S370 Antique Silver

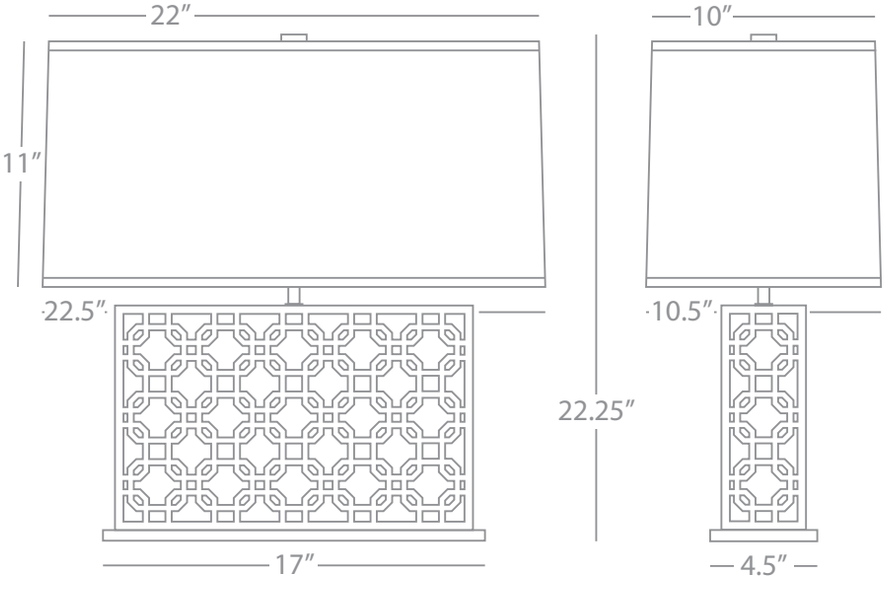

WILLIAMSBURG DICKINSON

Z372

Wide Table Lamp

2 - 100W Max.
Bulb Type: A
Switch: Hi-Lo Pull Chains
Deep Patina Bronze Finish w/
Antique Silver Accents
Rectangular Gray Mont Blanc Parchment Shade



LB998



DB998



CG998



CP997



BW997



PG997



MT997

WILLIAMSBURG Randolph

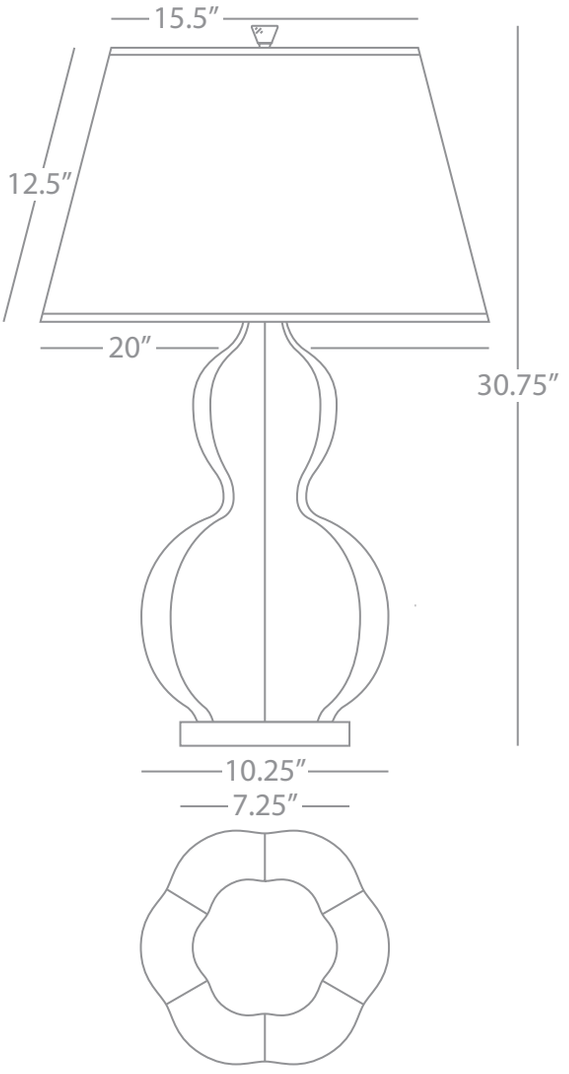

WILLIAMSBURG RANDOLPH

BW997

Table Lamp

1 - 150W Max.
Bulb Type: A
Switch: Hi-Lo Dimming
Bruton White Glazed Ceramic
w/ Polished Nickel Metal Parts
Lucite Base
Pearl Dupoini Fabric Shade

COLOR OPTIONS:

CG997	Carter Gray
CP997	Carter Plum
DB997	Dragons Blood
LB997	Lampblack
MT997	Mayo Teal
PG997	Parrot Green

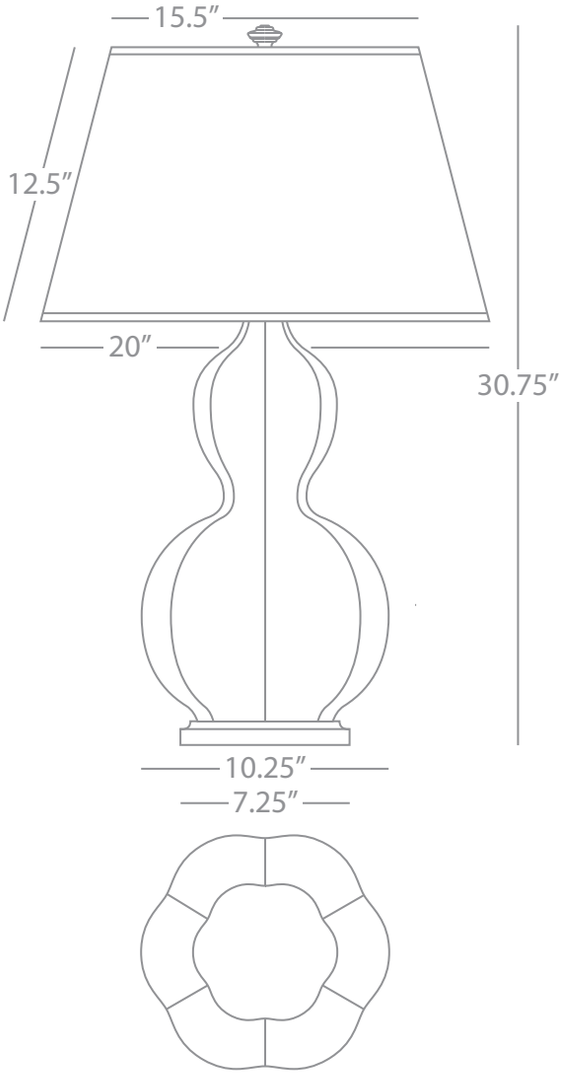

WILLIAMSBURG RANDOLPH

CG998

Table Lamp

1 - 150W Max.
Bulb Type: A
Switch: Hi-Lo Dimming
Carter Gray Glazed Ceramic
w/ Antique Brass Metal Parts
Walnut Wood Base
Pearl Dupoini Fabric Shade

COLOR OPTIONS:

BW998	Bruton White
CP998	Carter Plum
DB998	Dragons Blood
LB998	Lampblack
MT998	Mayo Teal
PG998	Parrot Green



3325



3326

WILLIAMSBURG Ludwell

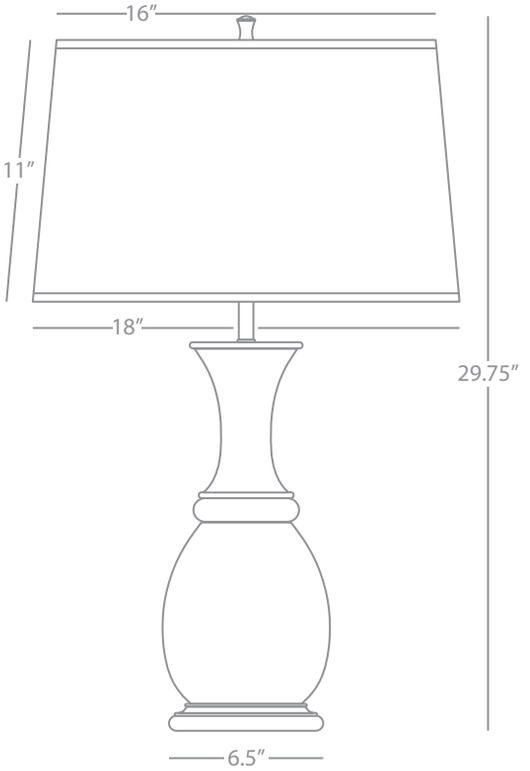

WILLIAMSBURG LUDWELL

3326

Table Lamp

1 - 150W Max.
Bulb Type: A
Switch: Hi-Lo Dimming
Polished White Glass
Aged Brass Finished Accents
White Silk Shade

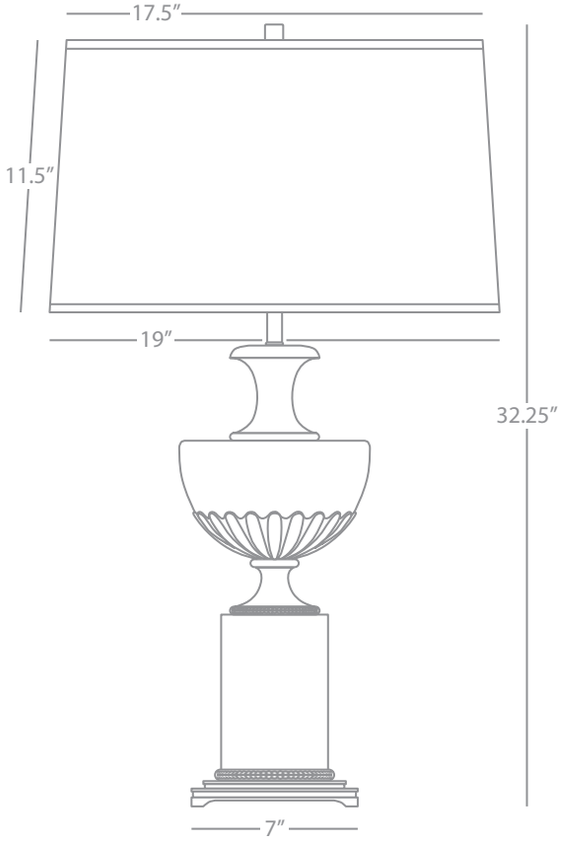

WILLIAMSBURG LUDWELL

3325

Urn Table Lamp

1 - 150W Max.
Bulb Type: A
Switch: Hi-Lo Dimming
Polished White Glass
Aged Brass Finished Accents
White Silk Shade



HIS02



BUL01



HIS01

Bulbs

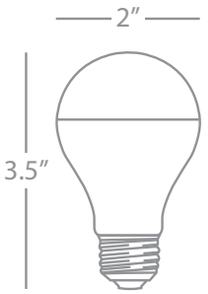

BULBS

BUL01

Medium Base Silver Tip Bulb

1 - 60W Max.
Silver Tip Bulb
For use with 1848, WH1848, 1849, WH1849, S1305 and S1306

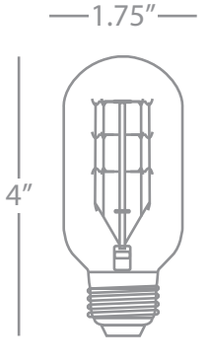

BULBS

HIS02

Medium Base Vintage Bulb

1 - 30W Max.
Vintage Filament Bulb
For use with 3373, 3375, D3373 and D3375

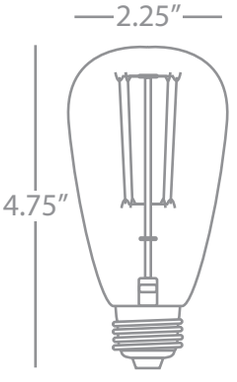

BULBS

HIS01

Medium Base Historical Bulb

1 - 40W Max.
1910 Squirrel Cage Filament Bulb
For use with P745, S745, Z745, P746, S746, Z746, S2169 and Z2169

OPTIONS:

BUL06 6 - 40W Historical Bulbs; For use with S2168 and Z2168

BUL09 9 - 40W Historical Bulbs; For use with B2102 and Z2102

BUL12 12 - 40W Historical Bulbs; For use with B2090, Z2090, S2167 and Z2167

BUL18 18 - 40W Historical Bulbs; For use with B2091 and Z2091

BUL30 30 - 40W Historical Bulbs; For use with B2099 and Z2099

Double Gourds

LARGE DOUBLE GOURD	BRASS BASE	BRONZE BASE	ANT. SILVER BASE	LUCITE BASE
BONE	1754, 1754X	1755, 1755X	1756, 1756X	A756, A756X
EMERALD	EG20, EG20X	EG21, EG21X	EG22, EG22X	EG23, EG23X
LILY	1660, 1660X	1640, 1640X	1670, 1670X	A670, A670X
PUMPKIN	1665, 1665X	1645, 1645X	1675, 1675X	A675, A675X
PEACOCK	1751, 1751X	1752, 1752X	1753, 1753X	A753, A753X
APPLE	1663, 1663X	1643, 1643X	1673, 1673X	A673, A673X
BABY BLUE	1666, 1666X	1646, 1646X	1676, 1676X	A676, A676X
OXBLOOD	1667, 1667X	1647, 1647X		A627, A627X
BUTTER	1604, 1604X	1605, 1605X	1606, 1606X	A606, A606X
SCHIAPARELLI PINK	1607, 1607X	1608, 1608X	1609, 1609X	A609, A609X
SMOKEY TAUPE	1748, 1748X	1749, 1749X	1750, 1750X	A750, A750X
EGG BLUE	1740, 1740X		1741, 1741X	A741, A741X
CINNAMON	1757, 1757X	1758, 1758X	1759, 1759X	A759, A759X
MARINE	1783, 1783X		1785, 1785X	A785, A785X
CELADON	1789, 1789X	1790, 1790X	1791, 1791X	A791, A791X
AMETHYST	1745, 1745X	1746, 1746X	1747, 1747X	A747, A747X
COFFEE	CF20, CF20X	CF21, CF21X	CF22, CF22X	CF23, CF23X
ASH	CR20, CR20X	CR21, CR21X	CR22, CR22X	CR23, CR23X
STEEL BLUE	OB20, OB20X	OB21, OB21X	OB22, OB22X	OB23, OB23X
RUBY RED	RR20, RR20X	RR21, RR21X	RR22, RR22X	RR23, RR23X
MIDNIGHT BLUE	MB20, MB20X	MB21, MB21X	MB22, MB22X	MB23, MB23X
CITRON	CI20, CI20C	CI21, CI21X	CI22, CI22X	CI23, CI23X
SUNSET YELLOW	SU20, SU20X	SU21, SU21X	SU22, SU22X	SU23, SU23X
BROWN TEA	TE20, TE20X	TE21, TE21X	TE22, TE22X	TE23, TE23X






SMALL DOUBLE GOURD	BRASS BASE	BRONZE BASE	ANT. SILVER BASE	LUCITE BASE
BONE	1774, 1774X	1775, 1775X	1776, 1776X	A776, A776X
EMERALD	EG10, EG10X	EG11, EG11X	EG12, EG12X	EG13, EG13X
LILY	1680, 1680X	1650, 1650X	1690, 1690X	A690, A690X
PUMPKIN	1685, 1685X	1655, 1655X	1695, 1695X	A695, A695X
PEACOCK	1771, 1771X	1772, 1772X	1773, 1773X	A773, A773X
APPLE	1683, 1683X	1653, 1653X	1693, 1693X	A693, A693X
BABY BLUE	1689, 1689X	1656, 1656X	1696, 1696X	A696, A696X
OXBLOOD	1687, 1687X	1657, 1657X		A697, A697X
BUTTER	1614, 1614X	1615, 1615X	1616, 1616X	A616, A616X
SCHIAPARELLI PINK	1617, 1617X	1618, 1618X	1619, 1619X	A619, A619X
SMOKEY TAUPE	1768, 1768X	1769, 1769X	1770, 1770X	A770, A770X
EGG BLUE	1760, 1760X		1761, 1761X	A761, A761X
CINNAMON	1777, 1777X	1778, 1778X	1779, 1779X	A779, A779X
MARINE	1780, 1780X		1782, 1782X	A782, A782X
CELADON	1786, 1786X	1787, 1787X	1788, 1788X	A788, A788X
AMETHYST	1765, 1765X	1766, 1766X	1767, 1767X	A767, A767X
COFFEE	CF10, CF10X	CF11, CF11X	CF12, CF12X	CF13, CF13X
ASH	CR10, CR10X	CR11, CR11X	CR12, CR12X	CR13, CR13X
STEEL BLUE	OB10, OB10X	OB11, OB11X	OB12, OB12X	OB13, OB13X
RUBY RED	RR10, RR10X	RR11, RR11X	RR12, RR12X	RR13, RR13X
MIDNIGHT BLUE	MB10, MB10X	MB11, MB11X	MB12, MB12X	MB13, MB13X
CITRON	CI10, CI10X	CI11, CI11X	CI12, CI12X	CI13, CI13X
SUNSET YELLOW	SU10, SU10X	SU11, SU11X	SU12, SU12X	SU13, SU13X
BROWN TEA	TE10, TE10X	TE11, TE11X	TE12, TE12X	TE13, TE13X





* "X" = PLAIN SHADE

Triple Gourds

LARGE TRIPLE GOURD	BRASS BASE	BRONZE BASE	ANT. SILVER BASE	LUCITE BASE
BONE	324X	344X	364X	A364X
EMERALD	EG40X	EG41X	EG42X	EG43X
LILY	311X	331X	351X	A351X
PUMPKIN	312X	332X	352X	A352X
PEACOCK	323X	343X	363X	A363X
APPLE	313X	333X	353X	A353X
BABY BLUE	321X	341X	361X	A361X
OXBLOOD	315X	335X		A355X
BUTTER	317X	337X	357X	A357X
SCHIAPARELLI PINK	318X	338X	358X	A358X
SMOKEY TAUPE	319X	339X	359X	A359X
EGG BLUE	322X		362X	A362X
CINNAMON	325X	345X	365X	A365X
MARINE	366X		368X	A368X
CELADON	369X	370X	371X	A371X
AMETHYST	381X	382X	383X	A383X
COFFEE	CF40X	CF41X	CF42X	CF43X
ASH	CR40X	CR41X	CR42X	CR43X
STEEL BLUE	OB40X	OB41X	OB42X	OB43X
RUBY RED	RR40X	RR41X	RR42X	RR43X
MIDNIGHT BLUE	MB40X	MB41X	MB42X	MB43X
CITRON	CI40X	CI41X	CI42X	CI43X
SUNSET YELLOW	SU40X	SU41X	SU42X	SU43X
BROWN TEA	TE40X	TE41X	TE42X	TE43X









SMALL TRIPLE GOURD	BRASS BASE	BRONZE BASE	ANT. SILVER BASE	LUCITE BASE
BONE	254X	274X	294X	A294X
EMERALD	EG30X	EG31X	EG32X	EG33X
LILY	241X	261X	281X	A281X
PUMPKIN	242X	262X	282X	A282X
PEACOCK	253X	273X	293X	A293X
APPLE	243X	263X	283X	A283X
BABY BLUE	251X	271X	291X	A291X
OXBLOOD	245X	265X		A285X
BUTTER	247X	267X	287X	A287X
SCHIAPARELLI PINK	248X	268X	288X	A288X
SMOKEY TAUPE	249X	269X	289X	A289X
EGG BLUE	252X		292X	A292X
CINNAMON	255X	275X	295X	A295X
MARINE	296X		298X	A298X
CELADON	256X	257X	258X	A258X
AMETHYST	378X	379X	380X	A380X
COFFEE	CF30X	CF31X	CF32X	CF33X
ASH	CR30X	CR31X	CR32X	CR33X
STEEL BLUE	OB30X	OB31X	OB32X	OB33X
RUBY RED	RR30X	RR31X	RR32X	RR33X
MIDNIGHT BLUE	MB30X	MB31X	MB32X	MB33X
CITRON	CI30X	CI31X	CI32X	CI33X
SUNSET YELLOW	SU30X	SU31X	SU32X	SU33X
BROWN TEA	TE30X	TE31X	TE32X	TE33X









AUDREY TABLE LAMP

BONE	BN980
EMERALD	EG980
LILY	LY980
PUMPKIN	PM980
PEACOCK	PC980
APPLE	AP980
BABY BLUE	BB980
OXBLOOD	OX980
BUTTER	BT980
SCHIAPARELLI PINK	SP980
SMOKEY TAUPE	ST980
EGG BLUE	EB980
CINNAMON	CM980
MARINE	MR980
CELADON	CL980
AMETHYST	AM980
COFFEE	CF980
ASH	CR980
STEEL BLUE	OB980
RUBY RED	RR980
MIDNIGHT BLUE	MB980
CITRON	CI980
SUNSET YELLOW	SU980
BROWN TEA	TE980

DELILAH TABLE LAMP

BONE	BN701
EMERALD	EG701
LILY	LY701
PUMPKIN	PM701
PEACOCK	PC701
APPLE	AP701
BABY BLUE	BB701
OXBLOOD	OX701
BUTTER	BT701
SCHIAPARELLI PINK	SP701
SMOKEY TAUPE	ST701
EGG BLUE	EB701
CINNAMON	CM701
MARINE	MR701
CELADON	CL701
AMETHYST	AM701
COFFEE	CF701
ASH	CR701
STEEL BLUE	OB701
RUBY RED	RR701
MIDNIGHT BLUE	MB701
CITRON	CI701
SUNSET YELLOW	SU701
BROWN TEA	TE701



Harvey






HARVEY ACCENT LAMP

BONE	BN990
EMERALD	EG990
LILY	LY990
PUMPKIN	PM990
PEACOCK	PC990
APPLE	AP990
BABY BLUE	BB990
OXBLOOD	OX990
BUTTER	BT990
SCHIAPARELLI PINK	SP990
SMOKEY TAUPE	ST990
EGG BLUE	EB990
CINNAMON	CM990
MARINE	MR990
CELADON	CL990
AMETHYST	AM990
COFFEE	CF990
ASH	CR990
STEEL BLUE	OB990
RUBY RED	RR990
MIDNIGHT BLUE	MB990
CITRON	CI990
SUNSET YELLOW	SU990
BROWN TEA	TE990

HARVEY TABLE LAMP

BONE	BN995
EMERALD	EG995
LILY	LY995
PUMPKIN	PM995
PEACOCK	PC995
APPLE	AP995
BABY BLUE	BB995
OXBLOOD	OX995
BUTTER	BT995
SCHIAPARELLI PINK	SP995
SMOKEY TAUPE	ST995
EGG BLUE	EB995
CINNAMON	CM995
MARINE	MR995
CELADON	CL995
AMETHYST	AM995
COFFEE	CF995
ASH	CR995
STEEL BLUE	OB995
RUBY RED	RR995
MIDNIGHT BLUE	MB995
CITRON	CI995
SUNSET YELLOW	SU995
BROWN TEA	TE995











DELTA TABLE LAMP

BONE	930
EMERALD	EG930
LILY	932
PUMPKIN	933
PEACOCK	934
APPLE	935
BABY BLUE	936
OXBLOOD	938
BUTTER	940
SCHIAPARELLI PINK	941
SMOKEY TAUPE	942
EGG BLUE	943
CINNAMON	944
MARINE	946
CELADON	947
AMETHYST	949
COFFEE	CF930
ASH	CR930
STEEL BLUE	OB930
RUBY RED	RR930
MIDNIGHT BLUE	MB930
CITRON	CI930
SUNSET YELLOW	SU930
BROWN TEA	TE930

MASON TABLE LAMP

BONE	960
EMERALD	EG960
LILY	962
PUMPKIN	963
PEACOCK	964
APPLE	965
BABY BLUE	966
OXBLOOD	968
BUTTER	970
SCHIAPARELLI PINK	971
SMOKEY TAUPE	972
EGG BLUE	973
CINNAMON	974
MARINE	976
CELADON	977
AMETHYST	979
COFFEE	CF960
ASH	CR960
STEEL BLUE	OB960
RUBY RED	RR960
MIDNIGHT BLUE	MB960
CITRON	CI960
SUNSET YELLOW	SU960
BROWN TEA	TE960






June



JUNE TABLE LAMP
(OYSTER LINEN SHADE)

BONE	BN993
EMERALD	EG993
LILY	LY993
PUMPKIN	PM993
PEACOCK	PC993
APPLE	AP993
BABY BLUE	BB993
OXBLOOD	OX993
BUTTER	BT993
SCHIAPARELLI PINK	SP993
SMOKEY TAUPE	ST993
EGG BLUE	EB993
CINNAMON	CM993
MARINE	MR993
CELADON	CL993
AMETHYST	AM993
COFFEE	CF993
ASH	CR993
STEEL BLUE	OB993
RUBY RED	RR993
MIDNIGHT BLUE	MB993
CITRON	CI993
SUNSET YELLOW	SU993
BROWN TEA	TE993

JUNE TABLE LAMP
(BUFF LINEN SHADE)

BONE	BN991
EMERALD	EG991
LILY	LY991
PUMPKIN	PM991
PEACOCK	PC991
APPLE	AP991
BABY BLUE	BB991
OXBLOOD	OX991
BUTTER	BT991
SCHIAPARELLI PINK	SP991
SMOKEY TAUPE	ST991
EGG BLUE	EB991
CINNAMON	CM991
MARINE	MR991
CELADON	CL991
AMETHYST	AM991
COFFEE	CF991
ASH	CR991
STEEL BLUE	OB991
RUBY RED	RR991
MIDNIGHT BLUE	MB991
CITRON	CI991
SUNSET YELLOW	SU991
BROWN TEA	TE991





PIKE TABLE LAMP
(BRASS BASE)

BONE	BN994
EMERALD	EG994
LILY	LY994
PUMPKIN	PM994
PEACOCK	PC994
APPLE	AP994
BABY BLUE	BB994
OXBLOOD	OX994
BUTTER	BT994
SCHIAPARELLI PINK	SP994
SMOKEY TAUPE	ST994
EGG BLUE	EB994
CINNAMON	CM994
MARINE	MR994
CELADON	CL994
AMETHYST	AM994
COFFEE	CF994
ASH	CR994
STEEL BLUE	OB994
RUBY RED	RR994
MIDNIGHT BLUE	MB994
CITRON	CI994
SUNSET YELLOW	SU994
BROWN TEA	TE994

PIKE TABLE LAMP
(ACRYLIC BASE)

BONE	BN996
EMERALD	EG996
LILY	LY996
PUMPKIN	PM996
PEACOCK	PC996
APPLE	AP996
BABY BLUE	BB996
OXBLOOD	OX996
BUTTER	BT996
SCHIAPARELLI PINK	SP996
SMOKEY TAUPE	ST996
EGG BLUE	EB996
CINNAMON	CM996
MARINE	MR996
CELADON	CL996
AMETHYST	AM996
COFFEE	CF996
ASH	CR996
STEEL BLUE	OB996
RUBY RED	RR996
MIDNIGHT BLUE	MB996
CITRON	CI996
SUNSET YELLOW	SU996
BROWN TEA	TE996








ATHENA TABLE LAMP

BONE	BN992
EMERALD	EG992
LILY	LY992
PUMPKIN	PM992
PEACOCK	PC992
APPLE	AP992
BABY BLUE	BB992
OXBLOOD	OX992
BUTTER	BT992
SCHIAPARELLI PINK	SP992
SMOKEY TAUPE	ST992
EGG BLUE	EB992
CINNAMON	CM992
MARINE	MR992
CELADON	CL992
AMETHYST	AM992
COFFEE	CF992
ASH	CR992
STEEL BLUE	OB992
RUBY RED	RR992
MIDNIGHT BLUE	MB992
CITRON	CI992
SUNSET YELLOW	SU992
BROWN TEA	TE992








DOUBLE GOURD
CF23X pg 16



TRIPLE GOURD
EG31X pg 15



TRIPLE GOURD
RR42X pg 15



DOUGHNUT
100XBN pg 1



DOUGHNUT
101XAS pg 1



DOUGHNUT
102XBZ pg 1



DOUGHNUT
103XBN pg 1



DOUGHNUT
104XAS pg 1



DOUGHNUT
105XBZ pg 1



RICO ESPINET PLATO
120 pg 131



RICO ESPINET PLATO
S120 pg 131



TIC-TAC-TOE
123 pg 6



TIC-TAC-TOE
125 pg 6



TIC-TAC-TOE
127 pg 6



DOUGHNUT
141 pg 3



DOUGHNUT
142 pg 3



CRISPIN
Z153 pg 7



DAVE
170 pg 9



DAVE
172 pg 9



CRICKET
173 pg 9

Index | Table Lamps



CRICKET
D173 pg 9



CRICKET
S173 pg 9



CRICKET
Z173 pg 9



JAYNE
210 pg 11



JAYNE
210BL pg 11



JAYNE
210BR pg 11



JAYNE
210RE pg 11



JAYNE
210X pg 11



JAYNE
211 pg 11



JAYNE
211BR pg 11



JAYNE
211RE pg 11



JAYNE
211X pg 11



JAYNE
212 pg 11



JAYNE
212BL pg 11



JAYNE
212BR pg 11



JAYNE
212X pg 11



JAYNE
213 pg 11



JAYNE
213BL pg 11



JAYNE
213RE pg 11



JAYNE
213X pg 11



SHAOLIN
214 pg 12



SHAOLIN
215 pg 12



ARIEL
222 pg 12



ARIEL
223 pg 12



EDGAR
230 pg 12



EDGAR
231 pg 12



MERCURY DOUBLE GOURD
235 pg 14



MERCURY DOUBLE GOURD
235B pg 14



MERCURY DOUBLE GOURD
236 pg 14



MERCURY DOUBLE GOURD
236B pg 14



RICO ESPINET BUSTER GLOBE
240 pg 132



RICO ESPINET BUSTER GLOBE
S240 pg 132



RICO ESPINET BUSTER GLOBE
Z240 pg 132



RICO ESPINET BUSTER GLOBE
241 pg 132



RICO ESPINET BUSTER GLOBE
S241 pg 132



RICO ESPINET BUSTER GLOBE
Z241 pg 132



RICO ESPINET SCOUT
246 pg 134



RICO ESPINET SCOUT
S246 pg 134



SEINE
280 pg 17



SEINE
S280 pg 17

Index | Table Lamps



SEINE
Z280 pg 17



SEINE
281 pg 17



SEINE
S281 pg 17



SEINE
Z281 pg 17



TRIPLE GOURD
A282X pg 15



WILLIAMSBURG MING
300 pg 189



WILLIAMSBURG MING
S300 pg 189



WILLIAMSBURG TUCKER
302 pg 190



WILLIAMSBURG TUCKER
S302 pg 190



WILLIAMSBURG NELSON
305 pg 191



WILLIAMSBURG DUNMORE
310 pg 192



WILLIAMSBURG DUNMORE
310B pg 192



WILLIAMSBURG DUNMORE
311 pg 192



WILLIAMSBURG DUNMORE
311B pg 192



WILLIAMSBURG WYTHE
312 pg 193



WILLIAMSBURG WYTHE
312B pg 193



WILLIAMSBURG WENTWORTH
345 pg 197



WILLIAMSBURG WENTWORTH
S345 pg 197



BANDIT
S347 pg 18



BANDIT
Z347 pg 18



TRIPLE GOURD
A368X pg 15



WILLIAMSBURG DICKINSON
Z372 pg 199



WILLIAMSBURG DICKINSON
Z373 pg 199



TRIPLE GOURD
378X pg 15



ABBEY BRONZE
L385 pg 10



ABBEY BRONZE
L385X pg 10



ABBEY BRONZE
L386 pg 10



ABBEY BRONZE
L386X pg 10



WAVY
434 pg 21



WAVY
435 pg 21



WAVY
436 pg 21



HELENA AL FRESCO
JV450 pg 34



HELENA AL FRESCO
WZ450 pg 34



FREYA AL FRESCO
JV451 pg 34



FREYA AL FRESCO
WZ451 pg 34



BRONTE AL FRESCO
JV452 pg 34



BRONTE AL FRESCO
WZ452 pg 34



PHOEBE AL FRESCO
JV453 pg 34



PHOEBE AL FRESCO
WZ453 pg 34



KOLEMAN
460 pg 22

Index | Table Lamps



KOLEMAN
S460 pg 22



KOLEMAN
Z460 pg 22



KOLEMAN
462 pg 23



KOLEMAN
S462 pg 23



KOLEMAN
Z462 pg 23



JONATHAN ADLER MEURICE
649 pg 155



JONATHAN ADLER MEURICE
649B pg 155



JONATHAN ADLER MEURICE
S649 pg 155



JONATHAN ADLER MEURICE
S649X pg 155



JONATHAN ADLER MEURICE
Z649 pg 155



JONATHAN ADLER MEURICE
Z649B pg 155



JONATHAN ADLER PARKER
S660 pg 162



JONATHAN ADLER PARKER
S669 pg 162



JONATHAN ADLER PARKER
Z669 pg 162



JONATHAN ADLER VENTANA
670 pg 165



JONATHAN ADLER VENTANA
PN670 pg 165



JONATHAN ADLER CLARIDGE
676 pg 168



JONATHAN ADLER CLARIDGE
676B pg 168



JONATHAN ADLER CLARIDGE
677 pg 168



JONATHAN ADLER CLARIDGE
677B pg 168



JONATHAN ADLER CLARIDGE
678 pg 168



JONATHAN ADLER CLARIDGE
678B pg 168



JONATHAN ADLER CLARIDGE
679 pg 168



JONATHAN ADLER CLARIDGE
679B pg 168



JONATHAN ADLER CLARIDGE
684 pg 168



JONATHAN ADLER CLARIDGE
684B pg 168



JONATHAN ADLER HAVANA
W691 pg 169



DELILAH
EG701 pg 25



DELILAH
MB701 pg 25



DELILAH
PM701 pg 25



DELILAH
RR701 pg 25



JONATHAN ADLER BRISTOL
708 pg 172



JONATHAN ADLER BRISTOL
S708 pg 172



JONATHAN ADLER CAPRI
BG730 pg 176



JONATHAN ADLER CAPRI
BL730 pg 176



JONATHAN ADLER CAPRI
OR730 pg 176



JONATHAN ADLER CAPRI
WH730 pg 176



JONATHAN ADLER CAPRI
BG732 pg 176



JONATHAN ADLER CAPRI
BL732 pg 176



JONATHAN ADLER CAPRI
OR732 pg 176

Index | Table Lamps



JONATHAN ADLER CAPRI
WH732 pg 176



JONATHAN ADLER CAPRI
BG736 pg 176



JONATHAN ADLER CAPRI
BL736 pg 176



JONATHAN ADLER CAPRI
OR736 pg 176



JONATHAN ADLER CAPRI
WH736 pg 176



JONATHAN ADLER CAPRI
BG737 pg 176



JONATHAN ADLER CAPRI
BL737 pg 176



JONATHAN ADLER CAPRI
OR737 pg 176



JONATHAN ADLER CAPRI
WH737 pg 176



JONATHAN ADLER CAPRI
BG738 pg 176



JONATHAN ADLER CAPRI
BL738 pg 176



JONATHAN ADLER CAPRI
OR738 pg 176



JONATHAN ADLER CAPRI
WH738 pg 176



ALBERT
P747 pg 27



ALBERT
Z747 pg 27



JONATHAN ADLER ANTWERP
765 pg 179



JONATHAN ADLER ANTWERP
S765 pg 179



DOUBLE GOURD
A770X pg 16



JONATHAN ADLER OJAI
781 pg 183



JONATHAN ADLER OJAI
S781 pg 183



JONATHAN ADLER HARLEQUIN
786 pg 184



JONATHAN ADLER HARLEQUIN
S786 pg 184



JONATHAN ADLER CANAAN
795 pg 185



JONATHAN ADLER CANAAN
795x pg 185



JONATHAN ADLER CANAAN
796 pg 185



JONATHAN ADLER CANAAN
796X pg 185



DOLLY
800 pg 28



DOLLY
G800 pg 28



DOLLY
G800B pg 28



DOLLY
801 pg 28



DOLLY
G801 pg 28



DOLLY
G801B pg 28



JONATHAN ADLER ST. GERMAIN
805 pg 186



JONATHAN ADLER ST. GERMAIN
BK805 pg 186



JONATHAN ADLER ST. GERMAIN
S805 pg 186



JONATHAN ADLER ST. GERMAIN
806 pg 186



JONATHAN ADLER ST. GERMAIN
BK806 pg 186



JONATHAN ADLER ST. GERMAIN
S806 pg 186



PENELOPE
A809 pg 30



PENELOPE
B809 pg 30

Index | Table Lamps



PENELOPE
F809 pg 30



PENELOPE
N809 pg 30



PENELOPE
O809 pg 30



PENELOPE
R809 pg 30



PENELOPE
S809 pg 30



PENELOPE
T809 pg 30



PENELOPE
W809 pg 30



PENELOPE
A810 pg 30



PENELOPE
B810 pg 30



PENELOPE
F810 pg 30



PENELOPE
N810 pg 30



PENELOPE
O810 pg 30



PENELOPE
R810 pg 30



PENELOPE
S810 pg 30



PENELOPE
T810 pg 30



PENELOPE
W810 pg 30



RICO ESPINET CHURCHILL
814 pg 135



RICO ESPINET CHURCHILL
D814 pg 135



RICO ESPINET ADIRONDACK
824 pg 136



OLIVER
828 pg 31



OREN
830 pg 32



HELENA
831 pg 33



HELENA
832 pg 33



HELENA
832X pg 33



HELENA
833 pg 33



BRONTE
837 pg 33



BRONTE
837C pg 33



BRONTE
838 pg 33



BRONTE
838X pg 33



BRONTE
839 pg 33



ASTER
840X pg 35



JONATHAN ADLER BARCELONA
BK840 pg 187



JONATHAN ADLER BARCELONA
GN840 pg 187



JONATHAN ADLER BARCELONA
LA840 pg 187



JONATHAN ADLER BARCELONA
RB840 pg 187



JONATHAN ADLER BARCELONA
WH840 pg 187



JONATHAN ADLER BARCELONA
BK841 pg 187



JONATHAN ADLER BARCELONA
GN841 pg 187



JONATHAN ADLER BARCELONA
LA841 pg 187



JONATHAN ADLER BARCELONA
RB841 pg 187

Index | Table Lamps



JONATHAN ADLER BARCELONA
WH841 pg 187



FREYA
845 pg 33



FREYA
846 pg 33



FREYA
846X pg 33



FREYA
847 pg 33



MAGELLAN
863 pg 37



MAGELLAN
S863 pg 37



PHOEBE
870 pg 33



PHOEBE
870C pg 33



PHOEBE
871 pg 33



PHOEBE
871X pg 33



PHOEBE
872 pg 33



JONATHAN ADLER BRISTOL
875 pg 172



JONATHAN ADLER BRISTOL
S875 pg 172



AIDEN
880 pg 38



AIDEN
S880 pg 38



AIDEN
881 pg 38



AIDEN
S881 pg 38



ANNA
890 pg 39



ANNA
891 pg 39



ANNA
892 pg 39



ANNA
894 pg 39



DELTA
935 pg 40



DELTA
941 pg 40



DELTA
942 pg 40



FRANCESCO
950 pg 41



FRANCESCO
S950 pg 41



MASON
CF960 pg 40



MASON
962 pg 40



MASON
964 pg 40



AUDREY
LY980 pg 42



AUDREY
MB980 pg 42



AUDREY
MR980 pg 42



AUDREY
PC980 pg 42



AUDREY
ST980 pg 42



HARVEY
AM990 pg 43



HARVEY
AP990 pg 43



HARVEY
EG990 pg 43



JUNE
LY991 pg 44



JUNE
ST991 pg 44

Index | Table Lamps



ATHENA
CI992 pg 45



ATHENA
CR992 pg 45



ATHENA
EG992 pg 45



ATHENA
PC992 pg 45



JUNE
BN993 pg 44



JUNE
CL993 pg 44



PIKE
ST994 pg 46



PIKE
SU994 pg 46



PIKE
TE994 pg 46



HARVEY
MB995 pg 43



HARVEY
ST995 pg 43



PIKE
CI996 pg 46



PIKE
PC996 pg 46



WILLIAMSBURG RANDOLPH
BW997 pg 200



WILLIAMSBURG RANDOLPH
CG997 pg 200



WILLIAMSBURG RANDOLPH
CP997 pg 200



WILLIAMSBURG RANDOLPH
DB997 pg 200



WILLIAMSBURG RANDOLPH
LB997 pg 200



WILLIAMSBURG RANDOLPH
MT997 pg 200



WILLIAMSBURG RANDOLPH
PG997 pg 200



WILLIAMSBURG RANDOLPH
BW998 pg 200



WILLIAMSBURG RANDOLPH
CG998 pg 200



WILLIAMSBURG RANDOLPH
CP998 pg 200



WILLIAMSBURG RANDOLPH
DB998 pg 200



WILLIAMSBURG RANDOLPH
LB998 pg 200



WILLIAMSBURG RANDOLPH
MT998 pg 200



WILLIAMSBURG RANDOLPH
PG998 pg 200



BLING
1005 pg 47



BLING
S1005 pg 47



BLING
Z1005 pg 47



KINETIC
1500 pg 56



KINETIC
B1500BRC pg 56



KINETIC
P1500 pg 56



KINETIC
Z1500DBZ pg 56



KINETIC
Z1502ALT pg 56



KINETIC
Z1502DBZ pg 56



KINETIC
Z1502XXX pg 56



KINETIC
1503 pg 56



KINETIC
1503ALT pg 56



KINETIC
1503X pg 56

Index | Table Lamps



KINETIC
B1503ALT pg 56



KINETIC
B1503BRC pg 56



KINETIC
B1503XXX pg 56



KINETIC
Z1503ALT pg 56



KINETIC
Z1503DBZ pg 56



KINETIC
Z1503XXX pg 56



JACKSON
1510 pg 57



JACKSON
D1510 pg 57



JACKSON
Z1510 pg 57



FINEAS
1513 pg 58



FINEAS
1514 pg 58



FINEAS
1515 pg 58



FINEAS
1516 pg 58



WILMA
1517 pg 59



WILMA
1517B pg 59



ADDISON
1540 pg 60



ADDISON
1540B pg 60



ADDISON
1541 pg 60



ADDISON
1541B pg 60



ASTRO
1553 pg 61



IRIS
1561 pg 62



IRIS
S1561 pg 62



IRIS
Z1561 pg 62



ADDISON
1570 pg 60



ADDISON
1570B pg 60



ADDISON
1571 pg 60



ADDISON
1571B pg 60



RICO ESPINET OLINDA
1578B pg 137



RICO ESPINET OLINDA
1578W pg 137



RICO ESPINET OLINDA
1579B pg 137



RICO ESPINET OLINDA
1579W pg 137



RICO ESPINET OLINDA
1580B pg 137



RICO ESPINET OLINDA
1580W pg 137



APOLLO
S1580 pg 63



RICO ESPINET OLINDA
1581B pg 137



RICO ESPINET OLINDA
1581W pg 137



RICO ESPINET TATU
1585 pg 138



RICO ESPINET TATU
1586 pg 138



RICO ESPINET MARINA
1590 pg 139



RICO ESPINET MARINA
1591 pg 139

Index | Table Lamps

RICO ESPINET LUA VESSEL
1595 pg 140

RICO ESPINET LUA VESSEL
1596 pg 140



DOUBLE GOURD
1617 pg 16



DOUBLE GOURD
1673 pg 16



DOUBLE GOURD
1772X pg 16



REAL SIMPLE
1802 pg 65



REAL SIMPLE
1803 pg 65



REAL SIMPLE
Z1812 pg 65



REAL SIMPLE
Z1813 pg 65



REAL SIMPLE
1822 pg 65



REAL SIMPLE
1823 pg 65



REAL SIMPLE
1832 pg 65



REAL SIMPLE
1833 pg 65



BRUNO
1840 pg 66



BRUNO
W1840 pg 66



BRUNO
1841 pg 67



BRUNO
1841W pg 67



BRUNO
1841X pg 67



ANT BEE
1862 pg 68



ANT BEE
A1862 pg 68



ANT BEE
P1862 pg 68



ALVIN
1900 pg 69



ALVIN
S1900 pg 69



ALVIN
Z1900 pg 69



ALVIN
Z1901 pg 70



PORTER
1910 pg 71



PORTER
S1910 pg 71



JONATHAN ADLER PARKER
1945 pg 164



JONATHAN ADLER PARKER
S1945 pg 164



JONATHAN ADLER PARKER
Z1945 pg 164



SLOAN
1957 pg 72



SLOAN
1957B pg 72



SLOAN
1958 pg 72



SLOAN
1958B pg 72



JULIET
1970 pg 73



JULIET
D1970 pg 73



JULIET
1971 pg 73



JULIET
D1971 pg 73



RICO ESPINET NINA
2040 pg 144



RICO ESPINET OVO
2044 pg 145

Index | Table Lamps



RICO ESPINET OVO
Z2044 pg 145



RICO ESPINET BUSTER
2056 pg 147



RICO ESPINET BUSTER
2056W pg 147



RICO ESPINET NINA
2069 pg 144



RICO ESPINET NINA
Z2069 pg 144



RICO ESPINET BUSTER CHICA
2082 pg 147



RICO ESPINET BUSTER CHICA
2082W pg 147



RICO ESPINET BUSTER CHICA
2083 pg 147



RICO ESPINET MILES
B2096 pg 149



RICO ESPINET MILES
Z2096 pg 149



RICO ESPINET CANDELA
B2100 pg 150



RICO ESPINET CANDELA
Z2100 pg 150



RICO ESPINET SAWYER
P2111 pg 151



RICO ESPINET SAWYER
Z2111 pg 151



AXIS
2130 pg 75



AXIS
D2130 pg 75



AXIS
2133 pg 75



AXIS
D2133 pg 75



LUCY
D2160 pg 78



LUCY
Z2160 pg 78



LUCY
D2161 pg 78



LUCY
Z2161 pg 78



RICO ESPINET SHINTO
2170 pg 154



ECHO
Z2170 pg 81



ECHO
Z2174 pg 81



ECHO
Z2175 pg 81



ECHO
S2180 pg 81



SATURNIA
Z2180 pg 84



ECHO
S2184 pg 81



SATURNIA
Z2184 pg 84



ECHO
S2185 pg 81



SATURNIA
Z2185 pg 84



SATURNIA
S2190 pg 84



SATURNIA
S2194 pg 84



SATURNIA
S2195 pg 84



LOGAN
2257 pg 87



LOGAN
2257B pg 87



LOGAN
2295 pg 87



LOGAN
2295B pg 87



MARY MCDONALD REGINE
2420 pg 90

Index | Table Lamps



MARY MCDONALD REGINE
2421 pg 90



ZOLTAR
2430 pg 91



ZOLTAR
S2430 pg 91



MARY MCDONALD ANNIKA
2500 pg 92



MARY MCDONALD ANNIKA
2500X pg 92



MARY MCDONALD ANNIKA
2501 pg 92



MARY MCDONALD ANNIKA
2501X pg 92



MARY MCDONALD ANNIKA
2502 pg 92



MARY MCDONALD ANNIKA
2502X pg 92



MARY MCDONALD ANNIKA
2503 pg 92



MARY MCDONALD ANNIKA
2503X pg 92



MARY MCDONALD ANNIKA
2504 pg 92



MARY MCDONALD ANNIKA
2504X pg 92



MARY MCDONALD ANNIKA
2505 pg 92



MARY MCDONALD ANNIKA
2505X pg 92



MARY MCDONALD ANNIKA
2506 pg 92



MARY MCDONALD ANNIKA
2506X pg 92



MARY MCDONALD ANNIKA
2507 pg 92



MARY MCDONALD ANNIKA
2507X pg 92



MARY MCDONALD ONDINE
2515 pg 93



MARY MCDONALD ONDINE
2515B pg 93



MARY MCDONALD ONDINE
2515T pg 93



MARY MCDONALD ONDINE
2516 pg 93



MARY MCDONALD ONDINE
2516B pg 93



MARY MCDONALD ONDINE
2516T pg 93



MARY MCDONALD LEOPOLD
2530 pg 94



MARY MCDONALD LEOPOLD
2530X pg 94



MARY MCDONALD CYLINDRICUS
2540 pg 95



MARY MCDONALD CYLINDRICUS
2540B pg 95



MARY MCDONALD CYLINDRICUS
Z2540 pg 95



MARY MCDONALD FIRENZE
2546 pg 96



MARY MCDONALD FIRENZE
2546B pg 96



MARY MCDONALD EMPIRE
B2547 pg 97



MARY MCDONALD EMPIRE
E2547 pg 97



MARY MCDONALD EMPIRE
G2547 pg 97



MARY MCDONALD DIRECTOIRE
2550 pg 98



MARY MCDONALD DIRECTOIRE
2550B pg 98



MARY MCDONALD SPENCE
2570 pg 99



MARY MCDONALD BAUDELAIRE
2585 pg 100



MARY MCDONALD BAUDELAIRE
S2585 pg 100

Index | Table Lamps



MARY MCDONALD SANTORINI
2590 pg 101



MARY MCDONALD SANTORINI
2591 pg 101



MARY MCDONALD SANTORINI
2592 pg 101



MARY MCDONALD SANTORINI
2593 pg 101



MARY MCDONALD BAUDELAIRE
2595 pg 100



MARY MCDONALD BAUDELAIRE
S2595 pg 100



MARY MCDONALD ANNIKA
2600 pg 92



MARY MCDONALD ANNIKA
2600X pg 92



MARY MCDONALD ANNIKA
2601 pg 92



MARY MCDONALD ANNIKA
2601X pg 92



MARY MCDONALD ANNIKA
2602 pg 92



MARY MCDONALD ANNIKA
2602X pg 92



MARY MCDONALD ANNIKA
2603 pg 92



MARY MCDONALD ANNIKA
2603X pg 92



MARY MCDONALD ANNIKA
2604 pg 92



MARY MCDONALD ANNIKA
2604X pg 92



MARY MCDONALD ANNIKA
2605 pg 92



MARY MCDONALD ANNIKA
2605X pg 92



WILTON
2609X pg 102



WILTON
2609CLP pg 102



MARY MCDONALD PYTHAGORAS
2670 pg 103



MARY MCDONALD PYTHAGORAS
S2670 pg 103



EDWIN
2740 pg 105



EDWIN
S2740 pg 105



LOGAN
2791 pg 87



LOGAN
2791B pg 87



LOGAN
2792 pg 87



LOGAN
2792B pg 87



RICO ESPINET BUSTER
2800 pg 147



RICO ESPINET BUSTER
2800W pg 147



RICO ESPINET BUSTER CHICA
2803 pg 147



RICO ESPINET BUSTER CHICA
2803W pg 147



TRENTON
2810 pg 106



SOFIA
2820 pg 107



SOFIA
D2820 pg 107



SOFIA
Z2820 pg 107



SOFIA
2821 pg 107



SOFIA
D2821 pg 107



SOFIA
Z2821 pg 107



MAX
S2850 pg 108

Index | Table Lamps



MAX
Z2850 pg 108



COLONNADE
S2855 pg 109



COLONNADE
Z2855 pg 109



VENUS & JUNO
3306 pg 110



VENUS & JUNO
3307 pg 110



THE MUSES
3315 pg 111



ANDRE
D3318 pg 112



ANDRE
Z3318 pg 112



WELLS
D3319 pg 112



GLASS HARRIET
3323 pg 113



GLASS HARRIET
B3323 pg 113



GLASS HARRIET
M3323 pg 113



GLASS HARRIET
T3323 pg 113



GLASS HARRIET
W3323 pg 113



ARTEMIS
3324 pg 114



ARTEMIS
3324B pg 114



ARTEMIS
3324W pg 114



WILLIAMSBURG LUDWELL
3325 pg 201



WILLIAMSBURG LUDWELL
3326 pg 201



ARTEMIS
3329 pg 114



ARTEMIS
3329B pg 114



ARTEMIS
3329W pg 114



KATE
3340B pg 118



KATE
3340W pg 118



KATE
3341B pg 118



KATE
3341W pg 118



KATE
3342B pg 118



KATE
3342W pg 118



KATE
3350B pg 118



KATE
3350W pg 118



KATE
3351B pg 118



KATE
3351W pg 118



KATE
3352B pg 118



KATE
3352W pg 118



GOSSAMER
3369 pg 119



GOSSAMER
3370 pg 119



LATITUDE
3371 pg 120



LATITUDE
D3371 pg 120



LATITUDE
3372 pg 120



LATITUDE
D3372 pg 120

Index | Table Lamps



LATITUDE
3377 pg 121



LATITUDE
D3377 pg 121



ALICE
3380 pg 122



ALICE
S3380 pg 122



MONROE
5000 pg 126



MONROE
S5000 pg 126



MONROE
Z5000 pg 126



MONROE
5001 pg 126



MONROE
S5001 pg 126



MONROE
Z5001 pg 126



BEAUX ARTS
9856 pg 127



BEAUX ARTS
9856X pg 127



BEAUX ARTS
9857 pg 127



BEAUX ARTS
9857X pg 127



BEAUX ARTS
9866 pg 127



BEAUX ARTS
9866B pg 127



BEAUX ARTS
9867 pg 127



BEAUX ARTS
9867B pg 127



LAURELTON
9890 pg 128



FOUNDRY
9938COP pg 129



FOUNDRY
9938KCOP pg 129



FOUNDRY
9938KRST pg 129



FOUNDRY
9938XRST pg 129



FOUNDRY
9939BCOP pg 129



FOUNDRY
9939COP pg 129



FOUNDRY
9939KCOP pg 129



FOUNDRY
9939KRST pg 129



FOUNDRY
9939XRST pg 129

Index | Floor Lamps



DOUGHNUT
106X pg 2



DOUGHNUT
107X pg 2



DOUGHNUT
108X pg 2



RICO ESPINET PLATO
121 pg 131



RICO ESPINET PLATO
S121 pg 131



DOUGHNUT
147 pg 3



DOUGHNUT
148 pg 3



DOUGHNUT
149 pg 3



DOUGHNUT
S149 pg 3



DOUGHNUT
Z149 pg 3



ABBEY BRONZE
L180 pg 10



ABBEY BRONZE
L180X pg 10



ABBEY BRONZE
L181 pg 10



ABBEY BRONZE
L181X pg 10



RICO ESPINET BUSTER GLOBE
242 pg 132



RICO ESPINET BUSTER GLOBE
S242 pg 132



RICO ESPINET BUSTER GLOBE
Z242 pg 132



RICO ESPINET SCOUT
247 pg 134



RICO ESPINET SCOUT
S247 pg 134



SEINE
282 pg 17



SEINE
S282 pg 17



SEINE
Z282 pg 17



WILLIAMSBURG MING
301 pg 189



WILLIAMSBURG MING
S301 pg 189



WILLIAMSBURG WENTWORTH
346 pg 197



WILLIAMSBURG WENTWORTH
S346 pg 197



BANDIT
S348 pg 18



BANDIT
Z348 pg 18



KOLEMAN
461 pg 22



KOLEMAN
S461 pg 22

Index | Floor Lamps



KOLEMAN
Z461 pg 22



KOLEMAN
463 pg 23



KOLEMAN
S463 pg 23



KOLEMAN
Z463 pg 23



JONATHAN ADLER MEURICE
647 pg 157



JONATHAN ADLER MEURICE
S647 pg 157



JONATHAN ADLER MEURICE
Z647 pg 157



JONATHAN ADLER MEURICE
651 pg 155



JONATHAN ADLER MEURICE
651B pg 155



JONATHAN ADLER MEURICE
S651 pg 155



JONATHAN ADLER MEURICE
S651X pg 155



JONATHAN ADLER MEURICE
S652 pg 155



JONATHAN ADLER MEURICE
S652X pg 155



JONATHAN ADLER PARKER
S668 pg 162



JONATHAN ADLER PARKER
Z668 pg 162



JONATHAN ADLER VENTANA
671 pg 165



JONATHAN ADLER VENTANA
PN671 pg 165



JONATHAN ADLER HAVANA
W692 pg 169



JONATHAN ADLER HAVANA
W696 pg 170



JONATHAN ADLER IPANEMA
S701 pg 171



JONATHAN ADLER BRISTOL
706 pg 172



JONATHAN ADLER BRISTOL
S706 pg 172



ALBERT
P748 pg 27



ALBERT
Z748 pg 27



ALBERT
P750 pg 26



ALBERT
Z750 pg 26



JONATHAN ADLER ANTWERP
766 pg 179

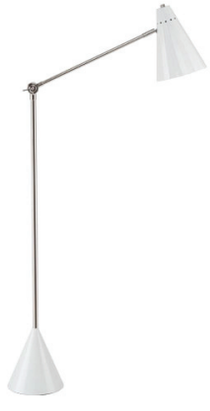

JONATHAN ADLER ANTWERP
S766 pg 179



JONATHAN ADLER OJAI
782 pg 183



JONATHAN ADLER OJAI
S782 pg 183

Index | Floor Lamps



JONATHAN ADLER HARLEQUIN
787 pg 184



JONATHAN ADLER HARLEQUIN
S787 pg 184



JONATHAN ADLER ST. GERMAIN
807 pg 186



JONATHAN ADLER ST. GERMAIN
BK807 pg 186



JONATHAN ADLER ST. GERMAIN
S807 pg 186



RICO ESPINET CHURCHILL
815 pg 135



RICO ESPINET CHURCHILL
D815 pg 135



JONATHAN ADLER BARCELONA
BK842 pg 187



JONATHAN ADLER BARCELONA
GN842 pg 187

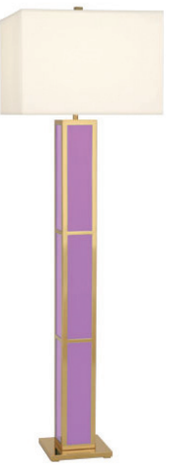

JONATHAN ADLER BARCELONA
LA842 pg 187

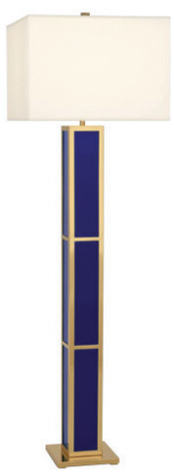

JONATHAN ADLER BARCELONA
RB842 pg 187



JONATHAN ADLER BARCELONA
WH842 pg 187



MAGELLAN
864 pg 37



MAGELLAN
S864 pg 37



AIDEN
882 pg 38



AIDEN
S882 pg 38



AIDEN
883 pg 38



AIDEN
S883 pg 38



ANNA
893 pg 39



FRANCESCO
951 pg 41



FRANCESCO
S951 pg 41



KINETIC
1505 pg 56

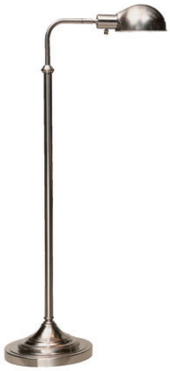

KINETIC
B1505BRC pg 56



KINETIC
P1505 pg 56



KINETIC
Z1505DBZ pg 56



JACKSON
1511 pg 57



JACKSON
D1511 pg 57



JACKSON
Z1511 pg 57



IRIS
1562 pg 62



IRIS
S1562 pg 62

Index | Floor Lamps



IRIS
Z1562 pg 62



APOLLO
S1566 pg 63



REAL SIMPLE
1804 pg 65



REAL SIMPLE
1805 pg 65



REAL SIMPLE
Z1814 pg 65



REAL SIMPLE
Z1815 pg 65



REAL SIMPLE
1824 pg 65



REAL SIMPLE
1825 pg 65



REAL SIMPLE
1834 pg 65



REAL SIMPLE
1835 pg 65



BRUNO
1842 pg 67



BRUNO
1842W pg 67



BRUNO
1842X pg 67



BRUNO
1847 pg 66



BRUNO
W1847 pg 66



BRUNO
1848 pg 66



BRUNO
W1848 pg 66



ANT BEE
1863 pg 68



ANT BEE
A1863 pg 68



ANT BEE
P1863 pg 68



ANT BEE
1873 pg 68



ALVIN
Z1902 pg 70



ALVIN
Z1903 pg 70



ALVIN
1905 pg 69



ALVIN
S1905 pg 69



ALVIN
Z1905 pg 69



ALVIN
Z1906 pg 70



PORTER
1911 pg 71



PORTER
S1911 pg 71



JULIET
1972 pg 73

Index | Floor Lamps



JULIET
D1972 pg 73



RICO ESPINET OVO
2045 pg 145



RICO ESPINET OVO
Z2045 pg 145



RICO ESPINET BUSTER
2057 pg 146



RICO ESPINET BUSTER
2057W pg 146



RICO ESPINET BUSTER
Z2057 pg 146



RICO ESPINET NINA
2068 pg 146



RICO ESPINET NINA
Z2068 pg 146



RICO ESPINET BUSTER CHICA
2080 pg 146



RICO ESPINET BUSTER CHICA
2080W pg 146



RICO ESPINET BUSTER CHICA
2081 pg 146



RICO ESPINET MILES
B2097 pg 149



RICO ESPINET MILES
Z2097 pg 149



RICO ESPINET CANDELA
B2101 pg 150



RICO ESPINET CANDELA
Z2101 pg 150



RICO ESPINET SAWYER
P2110 pg 151



RICO ESPINET SAWYER
Z2110 pg 151



AXIS
2131 pg 75



AXIS
D2131 pg 75



AXIS
2132 pg 75



AXIS
D2132 pg 75



LUCY
D2162 pg 78



LUCY
Z2162 pg 78



RICO ESPINET SHINTO
2171 pg 154



ECHO
Z2171 pg 81



ECHO
S2181 pg 81



SATURNIA
Z2181 pg 84



SATURNIA
S2191 pg 84



LOGAN
2258 pg 87



LOGAN
2258B pg 87

Index | Floor Lamps



ARCHER
S2286 pg 88



ZOLTAR
2431 pg 91



ZOLTAR
S2431 pg 91



MARY MCDONALD ONDINE
2517 pg 93



MARY MCDONALD ONDINE
2517B pg 93



MARY MCDONALD ONDINE
2517T pg 93



MARY MCDONALD SPENCE
2571 pg 99



MARY MCONDALD BAUDELAIRE
2586 pg 100



MARY MCONDALD BAUDELAIRE
S2586 pg 100



MARY MCONDALD BAUDELAIRE
2596 pg 100



MARY MCONDALD BAUDELAIRE
S2596 pg 100



WILTON
2606 pg 102



WILTON
2606X pg 102



WILTON
2607 pg 102



WILTON
2607X pg 102



EDWIN
2741 pg 105



EDWIN
S2741 pg 105



LOGAN
2793 pg 87



LOGAN
2793B pg 87



RICO ESPINET BUSTER
2801 pg 146



RICO ESPINET BUSTER
2801W pg 146



RICO ESPINET BUSTER CHICA
2804 pg 146



RICO ESPINET BUSTER CHICA
2804W pg 146



SOFIA
2822 pg 107



SOFIA
D2822 pg 107



SOFIA
Z2822 pg 107



SOFIA
2823 pg 107



SOFIA
D2823 pg 107



SOFIA
Z2823 pg 107



MAX
S2851 pg 108

Index | Floor Lamps



MAX
Z2851 pg 108



COLONNADE
S2856 pg 109



COLONNADE
Z2856 pg 109



THE MUSES
3316 pg 111



ANDRE
D3320 pg 112



ANDRE
Z3320 pg 112



MONROE
5002 pg 126



MONROE
S5002 pg 126



MONROE
Z5002 pg 126



BEAUX ARTS
9824BRN pg 127



DOUGHNUT
109X pg 4



DOUGHNUT
110X pg 4



DOUGHNUT
111X pg 4



DOUGHNUT
182 pg 4



DOUGHNUT
183 pg 4



DOUGHNUT
184 pg 4



DOUGHNUT
185 pg 4



WILLIAMSBURG TAYLOE
325 pg 194



WILLIAMSBURG TAYLOE
326 pg 194



WILLIAMSBURG BLAIKLEY
B340 pg 196



WILLIAMSBURG BLAIKLEY
C340 pg 196



WILLIAMSBURG BLAIKLEY
S340 pg 196



WILLIAMSBURG BLAIKLEY
Z340 pg 196



WILLIAMSBURG BLAIKLEY
B341 pg 196



WILLIAMSBURG BLAIKLEY
C341 pg 196



WILLIAMSBURG BLAIKLEY
S341 pg 196



WILLIAMSBURG BLAIKLEY
Z341 pg 196



WILLIAMSBURG BLAIKLEY
B342 pg 196



WILLIAMSBURG BLAIKLEY
C342 pg 196



WILLIAMSBURG BLAIKLEY
S342 pg 196

Index | Wall Sconces



WILLIAMSBURG BLAIKLEY
Z342 pg 196



BANDIT
S349 pg 18



BANDIT
Z349 pg 18



WILLIAMSBURG LIGHTFOOT
350 pg 198



WILLIAMSBURG LIGHTFOOT
S350 pg 198



WILLIAMSBURG LIGHTFOOT
Z350 pg 198



WILLIAMSBURG LIGHTFOOT
351 pg 198



WILLIAMSBURG LIGHTFOOT
S351 pg 198



WILLIAMSBURG LIGHTFOOT
Z351 pg 198



WILLIAMSBURG LIGHTFOOT
352 pg 198



WILLIAMSBURG LIGHTFOOT
S352 pg 198



WILLIAMSBURG LIGHTFOOT
Z352 pg 198



WILLIAMSBURG LIGHTFOOT
353 pg 198



WILLIAMSBURG LIGHTFOOT
S353 pg 198



WILLIAMSBURG LIGHTFOOT
Z353 pg 198



WILLIAMSBURG LIGHTFOOT
354 pg 198



WILLIAMSBURG LIGHTFOOT
S354 pg 198



WILLIAMSBURG LIGHTFOOT
Z354 pg 198



WILLIAMSBURG LIGHTFOOT
355 pg 198



WILLIAMSBURG LIGHTFOOT
S355 pg 198



WILLIAMSBURG LIGHTFOOT
Z355 pg 198



WILLIAMSBURG DICKINSON
S370 pg 199



WILLIAMSBURG DICKINSON
Z370 pg 199



MEILLEUR
407 pg 19



MEILLEUR
D407 pg 19



MEILLEUR
Z407 pg 19



MEILLEUR
412 pg 19



MEILLEUR
D412 pg 19



MEILLEUR
Z412 pg 19



MEILLEUR
S427X pg 20



MEILLEUR
Z427X pg 20



JONATHAN ADLER PARKER
639 pg 163



JONATHAN ADLER PARKER
S639 pg 163



JONATHAN ADLER PARKER
Z639 pg 163



JONATHAN ADLER PARKER
662 pg 163



JONATHAN ADLER PARKER
S662 pg 163



JONATHAN ADLER PARKER
Z662 pg 163



JONATHAN ADLER PARKER
667 pg 163



JONATHAN ADLER PARKER
S667 pg 163



JONATHAN ADLER VENTANA
672 pg 165

Index | Wall Sconces



JONATHAN ADLER VENTANA
PN672 pg 165



JONATHAN ADLER MEURICE
686 pg 158



JONATHAN ADLER MEURICE
S686 pg 158



JONATHAN ADLER MEURICE
Z686 pg 158



JONATHAN ADLER MEURICE
688 pg 159



JONATHAN ADLER MEURICE
S688 pg 159



JONATHAN ADLER MEURICE
Z688 pg 159



JONATHAN ADLER HAVANA
W697 pg 170



JONATHAN ADLER HAVANA
W698 pg 170



JONATHAN ADLER HAVANA
W708 pg 169



JONATHAN ADLER SPUTNIK
711 pg 173



JONATHAN ADLER SPUTNIK
S711 pg 173



JONATHAN ADLER CERAMIC
730L pg 175



JONATHAN ADLER CERAMIC
730R pg 175



JONATHAN ADLER CERAMIC
731 pg 175



JONATHAN ADLER CERAMIC
732 pg 175



JONATHAN ADLER CAPRI
BG735 pg 176



JONATHAN ADLER CAPRI
BL735 pg 176



JONATHAN ADLER CAPRI
OR735 pg 176



JONATHAN ADLER CAPRI
WH735 pg 176



ALBERT
P745 pg 26



ALBERT
S745 pg 26



ALBERT
Z745 pg 26



JONATHAN ADLER MEURICE
S760 pg 160



JONATHAN ADLER MEURICE
Z760 pg 160



JONATHAN ADLER MEURICE
S761 pg 160



JONATHAN ADLER MEURICE
Z761 pg 160



JONATHAN ADLER MEURICE
S762 pg 160



JONATHAN ADLER MEURICE
Z762 pg 160



JONATHAN ADLER VENTANA
771 pg 167



JONATHAN ADLER VENTANA
PN771 pg 167



JONATHAN ADLER RIO
777 pg 180



JONATHAN ADLER RIO
S777 pg 180



JONATHAN ADLER RIO
Z777 pg 180



JONATHAN ADLER OJAI
785 pg 183



JONATHAN ADLER OJAI
S785 pg 183



RICO ESPINET CHURCHILL
811 pg 135



RICO ESPINET CHURCHILL
D811 pg 135



RICO ESPINET CHURCHILL
816 pg 135



RICO ESPINET CHURCHILL
D816 pg 135

Index | Wall Sconces



WARWICK
862 pg 36



WARWICK
S862 pg 36



AIDEN
884 pg 38



AIDEN
S884 pg 38



AIDEN
885 pg 38



AIDEN
S885 pg 38



BLING
1001 pg 47



BLING
S1001 pg 47



BLING
Z1001 pg 47



ANEMONE
S1305 pg 49



ANEMONE
S1306 pg 49



TYRONE
B1310 pg 50



TYRONE
C1310 pg 50



TYRONE
S1310 pg 50



TYRONE
Z1310 pg 50



RODERICK
B1311 pg 51



RODERICK
C1311 pg 51



RODERICK
S1311 pg 51



RODERICK
Z1311 pg 51



RODERICK
B1315 pg 51



RODERICK
C1315 pg 51



RODERICK
S1315 pg 51



RODERICK
Z1315 pg 51



BRYCE
1318 pg 53



BRYCE
B1318 pg 53



BRYCE
C1318 pg 53



BRYCE
S1318 pg 53



BRYCE
Z1318 pg 53



HALO
1324 pg 54



HALO
B1324 pg 54



HALO
C1324 pg 54



HALO
1325 pg 54



HALO
B1325 pg 54



HALO
C1325 pg 54



BRADLEY
C1333 pg 55



BRADLEY
S1333 pg 55



BRADLEY
Z1333 pg 55



BRADLEY
C1334 pg 55



BRADLEY
S1334 pg 55



BRADLEY
Z1334 pg 55

Index | Wall Sconces



BRADLEY
C1335 pg 55



BRADLEY
S1335 pg 55



BRADLEY
Z1335 pg 55



ADDISON
1542 pg 60



IRIS
1563 pg 62



IRIS
S1563 pg 62



IRIS
Z1563 pg 62



ADDISON
1572 pg 60



APOLLO
S1581 pg 63



PORTER
1909 pg 71



PORTER
S1909 pg 71



JONATHAN ADLER PARKER
1946 pg 164



JONATHAN ADLER PARKER
S1946 pg 164



JONATHAN ADLER PARKER
Z1946 pg 164



JULIET
1973 pg 73



JULIET
D1973 pg 73



CHASE
1986 pg 74



CHASE
D1986 pg 74



CHASE
S1986 pg 74



CHASE
Z1986 pg 74



CHASE
1987 pg 74



CHASE
D1987 pg 74



CHASE
S1987 pg 74



CHASE
Z1987 pg 74



CHASE
1988 pg 74



CHASE
D1988 pg 74



CHASE
S1988 pg 74



CHASE
Z1988 pg 74



RICO ESPINET CASPIAN
D2004 pg 142



RICO ESPINET CASPIAN
D2104 pg 142



RICO ESPINET CASPIAN
Z2104 pg 142



RICO ESPINET CASPIAN
Z2114 pg 142



RICO ESPINET VAUX
2115 pg 153



RICO ESPINET CASPIAN
D2117 pg 143



RICO ESPINET CASPIAN
Z2117 pg 143



RICO ESPINET CASPIAN
D2118 pg 143



RICO ESPINET CASPIAN
S2118 pg 143



RICO ESPINET CASPIAN
Z2118 pg 143



AXIS
2136 pg 77



AXIS
D2136 pg 77

Index | Wall Sconces



AXIS
2137 pg 77



AXIS
D2137 pg 77



AXIS
2138 pg 77



AXIS
D2138 pg 77



LUCY
D2163 pg 79



LUCY
Z2163 pg 79



PETRIOLO
S2169 pg 80



PETRIOLO
Z2169 pg 80



ECHO
Z2172 pg 82



ECHO
S2182 pg 82



SATURNIA
Z2182 pg 85



SATURNIA
S2192 pg 85



ZOLTAR
2432 pg 91



ZOLTAR
S2432 pg 91



MARY MCDONALD ONDINE
2513 pg 93



MARY MCDONALD ONDINE
2513B pg 93



MARY MCDONALD ONDINE
2513R pg 93



MARY MCDONALD ONDINE
2514 pg 93



MARY MCDONALD ONDINE
2514B pg 93



MARY MCDONALD ONDINE
2514R pg 93



MARY MCDONALD ONDINE
2518 pg 93



MARY MCDONALD ONDINE
2518B pg 93



MARY MCDONALD ONDINE
2518T pg 93



MARY MCDONALD ONDINE
2519 pg 93



MARY MCDONALD ONDINE
2519B pg 93



MARY MCDONALD ONDINE
2519T pg 93



MARY MCDONALD LEOPOLD
2531 pg 94



MARY MCDONALD LEOPOLD
2531X pg 94



MARY MCDONALD CYLINDRICUS
2541 pg 95



MARY MCDONALD CYLINDRICUS
Z2541 pg 95



MARY MCDONALD DIRECTOIRE
2551 pg 98



MARY MCDONALD DIRECTOIRE
2554 pg 98



MARY MCDONALD DIRECTOIRE
2554B pg 98



MARY MCDONALD DIRECTOIRE
2561X pg 98



MARY MCDONALD SPENCE
2572 pg 99



MARY MCDONALD DIRECTOIRE
2654 pg 98



MARY MCDONALD PYTHAGORAS
2671 pg 103



MARY MCDONALD PYTHAGORAS
S2671 pg 103



BINARY
2703 pg 104



EDWIN
2743 pg 105

Index | Wall Sconces



EDWIN
S2743 pg 105



TRENTON
2812 pg 106



COLONNADE
S2857 pg 109



COLONNADE
Z2857 pg 109



THE MUSES
3314 pg 111



BLAKE
3364 pg 117



BLAKE
S3364 pg 117



BLAKE
Z3364 pg 117



GOSSAMER
3368 pg 119



LATITUDE
3374 pg 120



LATITUDE
D3374 pg 120



LATITUDE
3375 pg 121



LATITUDE
D3375 pg 121



ALICE
3381 pg 122



ALICE
S3381 pg 122



ALICE
3382 pg 122



ALICE
S3382 pg 122



WONTON
4238 pg 124



WONTON
S4238 pg 124

Wall Swingers | Index



MEILLEUR
S428X pg 20



MEILLEUR
Z428X pg 20



MEILLEUR
S429X pg 20



MEILLEUR
Z429X pg 20



KOLEMAN
464 pg 23



KOLEMAN
S464 pg 23



KOLEMAN
Z464 pg 23



JONATHAN ADLER HAVANA
W695 pg 170



ALBERT
P749 pg 27



ALBERT
Z749 pg 27



OLIVER
829 pg 31



KINETIC
1504 pg 56



KINETIC
1504ALT pg 56



KINETIC
1504X pg 56



KINETIC
B1504ALT pg 56



KINETIC
B1504BRC pg 56



KINETIC
B1504XXX pg 56



KINETIC
Z1504ALT pg 56



KINETIC
Z1504DBZ pg 56



KINETIC
Z1504XXX pg 56

Index | Wall Swingers



IRIS
1564 pg 62



IRIS
S1564 pg 62



IRIS
Z1564 pg 62



REAL SIMPLE
1806 pg 64



REAL SIMPLE
1809 pg 64



REAL SIMPLE
Z1816 pg 64



REAL SIMPLE
Z1819 pg 64



REAL SIMPLE
1826 pg 64



REAL SIMPLE
1829 pg 64



REAL SIMPLE
1836 pg 64



REAL SIMPLE
1839 pg 64



BRUNO
1849 pg 66



BRUNO
W1849 pg 66



ANT BEE
1864 pg 68



ANT BEE
A1874 pg 68



ANT BEE
1874 pg 68



ANT BEE
P1874 pg 68



ALVIN
Z1908 pg 70



RICO ESPINET MILES
B2098 pg 149



RICO ESPINET MILES
Z2098 pg 149



MARY MCDONALD DIRECTOIRE
2555 pg 98



MARY MCDONALD DIRECTOIRE
2555B pg 98



MARY MCDONALD DIRECTOIRE
2565 pg 98



MARY MCDONALD SPENCE
2573 pg 99



SOFIA
2824 pg 107



SOFIA
D2824 pg 107



SOFIA
Z2824 pg 107



WONTON
4237 pg 124



WONTON
S4237 pg 124

Index | Flush Mounts



DOUGHNUT
139 pg 2



DOUGHNUT
S139 pg 2



DOUGHNUT
Z139 pg 2



DOUGHNUT
S152 pg 2



DOUGHNUT
Z152 pg 2



WILLIAMSBURG DICKINSON
S371 pg 199



WILLIAMSBURG DICKINSON
Z371 pg 199



JONATHAN ADLER PARKER
664 pg 163



JONATHAN ADLER PARKER
S664 pg 163



JONATHAN ADLER PARKER
Z664 pg 163



JONATHAN ADLER MEURICE
689 pg 159



JONATHAN ADLER MEURICE
S689 pg 159



JONATHAN ADLER MEURICE
Z689 pg 159



JONATHAN ADLER SPUTNIK
711 pg 173



JONATHAN ADLER SPUTNIK
S711 pg 173



BLING
1002 pg 47



BLING
S1002 pg 47



BLING
Z1002 pg 47



ANEMONE
S1305 pg 49



ANEMONE
S1306 pg 49



RODERICK
B1314 pg 52



RODERICK
C1314 pg 52



RODERICK
S1314 pg 52



RODERICK
Z1314 pg 52



RODERICK
B1316 pg 52



RODERICK
C1316 pg 52



RODERICK
S1316 pg 52



RODERICK
Z1316 pg 52



RODERICK
B1317 pg 52



RODERICK
C1317 pg 52



RODERICK
S1317 pg 52



RODERICK
Z1317 pg 52



BRYCE
1319 pg 53



BRYCE
B1319 pg 53



BRYCE
C1319 pg 53



BRYCE
S1319 pg 53



BRYCE
Z1319 pg 53



BRADLEY
C1338 pg 55



BRADLEY
S1338 pg 55



BRADLEY
Z1338 pg 55

Index | Flush Mounts



BRADLEY
C1339 pg 55



BRADLEY
S1339 pg 55



BRADLEY
Z1339 pg 55



ADDISON
1543 pg 60



ADDISON
1545 pg 60



ADDISON
1573 pg 60



ADDISON
1575 pg 60



JONATHAN ADLER PARKER
1947 pg 164



JONATHAN ADLER PARKER
S1947 pg 164



JONATHAN ADLER PARKER
Z1947 pg 164



CHASE
1985 pg 74



CHASE
D1985 pg 74



CHASE
S1985 pg 74



CHASE
Z1985 pg 74



RICO ESPINET NINA
2043 pg 144



RICO ESPINET NINA
Z2043 pg 144



RICO ESPINET NINA
2058 pg 144



RICO ESPINET NINA
Z2058 pg 144



AXIS
2139 pg 77



AXIS
D2139 pg 77



SATURNIA
Z2187 pg 85



SATURNIA
S2197 pg 85



MARY MCDONALD DIRECTOIRE
2552 pg 98



MARY MCDONALD DIRECTOIRE
2553 pg 98



MARY MCDONALD DIRECTOIRE
2562X pg 98



MARY MCDONALD DIRECTOIRE
2563X pg 98



BLAKE
3363 pg 117



BLAKE
S3363 pg 117



BLAKE
Z3363 pg 117

Index | Pendants



JONATHAN ADLER MEURICE
53LS pg 161



JONATHAN ADLER MEURICE
53SN pg 161



JONATHAN ADLER MEURICE
53ST pg 161



JONATHAN ADLER MEURICE
S53LS pg 161



JONATHAN ADLER MEURICE
S53SN pg 161



JONATHAN ADLER MEURICE
S53ST pg 161



JONATHAN ADLER MEURICE
Z53LS pg 161



JONATHAN ADLER MEURICE
Z53SN pg 161



JONATHAN ADLER MEURICE
Z53ST pg 161



JONATHAN ADLER MEURICE
57LS pg 161



JONATHAN ADLER MEURICE
57SN pg 161



JONATHAN ADLER MEURICE
57ST pg 161



JONATHAN ADLER MEURICE
S57LS pg 161



JONATHAN ADLER MEURICE
S57SN pg 161



JONATHAN ADLER MEURICE
S57ST pg 161



JONATHAN ADLER MEURICE
Z57LS pg 161



JONATHAN ADLER MEURICE
Z57SN pg 161



JONATHAN ADLER MEURICE
Z57ST pg 161



ELENA
B167 pg 8



ELENA
K167 pg 8



ELENA
W167 pg 8



ELENA
B168 pg 8



ELENA
K168 pg 8



ELENA
W168 pg 8



ELENA
B169 pg 8



ELENA
K169 pg 8



ELENA
W169 pg 8



MILLBROOK
BL225 pg 13



MILLBROOK
BL226 pg 13



MILLBROOK
BL227 pg 13



RICO ESPINET BUSTER GLOBE
243 pg 132



RICO ESPINET BUSTER GLOBE
S243 pg 132



RICO ESPINET BUSTER GLOBE
Z243 pg 132



WILLIAMSBURG TAYLOE
315 pg 194



WILLIAMSBURG TAYLOE
316 pg 194



WILLIAMSBURG TAYLOE
317 pg 194



WILLIAMSBURG TAYLOE
318 pg 194



WILLIAMSBURG CUSTIS
WB330 pg 195



WILLIAMSBURG CUSTIS
WB331 pg 195



WILLIAMSBURG CUSTIS
WB332 pg 195

Index | Pendants



WILLIAMSBURG CUSTIS
WB333 pg 195



WILLIAMSBURG CUSTIS
WB334 pg 195



WILLIAMSBURG CUSTIS
WB335 pg 195



WILLIAMSBURG CUSTIS
WB336 pg 195



WILLIAMSBURG CUSTIS
WB337 pg 195



WILLIAMSBURG CUSTIS
WB338 pg 195



WILLIAMSBURG CUSTIS
WB339 pg 195



BEEHIVE
D616 pg 24



BEEHIVE
N616 pg 24



BEEHIVE
S616 pg 24



BEEHIVE
Z616 pg 24



JONATHAN ADLER MEURICE
653 pg 156



JONATHAN ADLER MEURICE
S653 pg 156



JONATHAN ADLER MEURICE
Z653 pg 156



JONATHAN ADLER MEURICE
657 pg 156



JONATHAN ADLER MEURICE
S657 pg 156



JONATHAN ADLER MEURICE
Z657 pg 156



JONATHAN ADLER PARKER
663 pg 163



JONATHAN ADLER PARKER
S663 pg 163



JONATHAN ADLER PARKER
Z663 pg 163



JONATHAN ADLER HAVANA
W693 pg 169



JONATHAN ADLER HAVANA
W694 pg 169



JONATHAN ADLER IPANEMA
S699 pg 171



JONATHAN ADLER SPUTNIK
713 pg 173



JONATHAN ADLER SPUTNIK
S713 pg 173



JONATHAN ADLER CAPRI
BG734 pg 176



JONATHAN ADLER CAPRI
BL734 pg 176



JONATHAN ADLER CAPRI
OR734 pg 176



JONATHAN ADLER CAPRI
WH734 pg 176



JONATHAN ADLER CAPRI
WH739 pg 177



ALBERT
P746 pg 26



ALBERT
S746 pg 26



ALBERT
Z746 pg 26



JONATHAN ADLER ANTWERP
768 pg 179



JONATHAN ADLER ANTWERP
S768 pg 179



JONATHAN ADLER RIO
779 pg 180



JONATHAN ADLER RIO
S779 pg 180



JONATHAN ADLER RIO
Z779 pg 180



JONATHAN ADLER OJAI
783 pg 183



JONATHAN ADLER OJAI
S783 pg 183

Index | Pendants



PENELOPE
A808 pg 29



PENELOPE
B808 pg 29



PENELOPE
F808 pg 29



PENELOPE
N808 pg 29



PENELOPE
O808 pg 29



PENELOPE
R808 pg 29



PENELOPE
S808 pg 29



PENELOPE
T808 pg 29



PENELOPE
W808 pg 29



RICO ESPINET CHURCHILL
812 pg 135



RICO ESPINET CHURCHILL
D812 pg 135



RICO ESPINET CHURCHILL
813 pg 135



RICO ESPINET CHURCHILL
D813 pg 135



WARWICK
860 pg 36



WARWICK
S860 pg 36



WARWICK
861 pg 36



WARWICK
S861 pg 36



ADDISON
1544 pg 60



ADDISON
1574 pg 60



APOLLO
S1567 pg 63

Pendants | Index



APOLLO
S1582 pg 63



ANT BEE
1894 pg 68



ANT BEE
P1894 pg 68

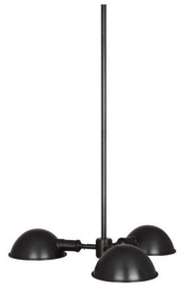

ANT BEE
Z1894 pg 68



PORTER
1912 pg 71



PORTER
S1912 pg 71



IRIS
1963 pg 62



IRIS
S1963 pg 62



IRIS
Z1963 pg 62



RICO ESPINET NOVA
2005 pg 141



RICO ESPINET NOVA
S2005 pg 141



RICO ESPINET NOVA
Z2005 pg 141



RICO ESPINET MARINA
2024 pg 139



RICO ESPINET BUSTER
2055 pg 146



RICO ESPINET BUSTER
2055W pg 146



RICO ESPINET BUSTER
Z2055 pg 146



RICO ESPINET VAUX
2116 pg 2116



AXIS
2129 pg 76



AXIS
D2129 pg 76



AXIS
2134 pg 77

Index | Pendants



AXIS
D2134 pg 77



AXIS
2135 pg 77



AXIS
D2135 pg 77



LUCY
D2164 pg 79



LUCY
Z2164 pg 79



LUCY
D2165 pg 79



LUCY
Z2165 pg 79



ECHO
Z2176 pg 82



ECHO
Z2179 pg 82



SATURNIA
Z2183 pg 85



ECHO
S2186 pg 82



SATURNIA
Z2186 pg 85



ECHO
S2189 pg 82



SATURNIA
S2193 pg 85



SATURNIA
S2196 pg 85



ZOLTAR
2433 pg 91



ZOLTAR
S2433 pg 91



MARY MCDONALD PYTHAGORAS
2672 pg 103



MARY MCDONALD PYTHAGORAS
S2672 pg 103



EDWIN
2742 pg 105



EDWIN
S2742 pg 105



RICO ESPINET BUSTER
2802 pg 146



RICO ESPINET BUSTER
2802W pg 146



TRENTON
2811 pg 106



COLE
S3336 pg 115



COLE
S3337 pg 115



BLAKE
3338 pg 116



BLAKE
S3338 pg 116



BLAKE
Z3338 pg 116



BLAKE
3360 pg 116



BLAKE
S3360 pg 116



BLAKE
Z3360 pg 116



BLAKE
3361 pg 116



BLAKE
S3361 pg 116



BLAKE
Z3361 pg 116



BLAKE
3362 pg 116



BLAKE
S3362 pg 116



BLAKE
Z3362 pg 116



LATITUDE
3373 pg 121



LATITUDE
D3373 pg 121

Index | Pendants



AXIOM
3390 pg 123



AXIOM
B3390 pg 123



AXIOM
S3390 pg 123



RICO ESPINET BUSTER GLOBE
244 pg 132



RICO ESPINET BUSTER GLOBE
S244 pg 132



RICO ESPINET BUSTER GLOBE
Z244 pg 132



RICO ESPINET TYLER GLOBE
245 pg 133



RICO ESPINET TYLER GLOBE
S245 pg 133



RICO ESPINET TYLER GLOBE
Z245 pg 133



JONATHAN ADLER MEURICE
654 pg 156



JONATHAN ADLER MEURICE
S654 pg 156



JONATHAN ADLER MEURICE
Z654 pg 156



JONATHAN ADLER VENTANA
673 pg 166



JONATHAN ADLER VENTANA
PN673 pg 166



JONATHAN ADLER VENTANA
674 pg 166



JONATHAN ADLER VENTANA
PN674 pg 166



JONATHAN ADLER VENTANA
685 pg 166



JONATHAN ADLER VENTANA
PN685 pg 166



JONATHAN ADLER MEURICE
687 pg 158



JONATHAN ADLER MEURICE
S687 pg 158



JONATHAN ADLER MEURICE
Z687 pg 158



JONATHAN ADLER IPANEMA
S700 pg 171



JONATHAN ADLER HAVANA
W709 pg 169

Index | Chandeliers



JONATHAN ADLER SPUTNIK
710 pg 173



JONATHAN ADLER SPUTNIK
S710 pg 173



JONATHAN ADLER SPUTNIK
714 pg 173



JONATHAN ADLER SPUTNIK
S714 pg 173



JONATHAN ADLER VENTANA
718 pg 167



JONATHAN ADLER VENTANA
PN718 pg 167



JONATHAN ADLER MILANO
755 pg 178



JONATHAN ADLER MILANO
S755 pg 178



JONATHAN ADLER RIO
790 pg 181



JONATHAN ADLER RIO
S790 pg 181



JONATHAN ADLER RIO
Z790 pg 181



JONATHAN ADLER RIO
791 pg 182



JONATHAN ADLER RIO
S791 pg 182



JONATHAN ADLER RIO
Z791 pg 182



JONATHAN ADLER VIENNA
865 pg 188



JONATHAN ADLER VIENNA
S865 pg 188



JONATHAN ADLER VIENNA
866 pg 188



JONATHAN ADLER VIENNA
S866 pg 188



BLING
1000 pg 47



BLING
S1000 pg 47



BLING
Z1000 pg 47



BLING
1004 pg 48



BLING
S1004 pg 48



BLING
Z1004 pg 48



BLING
1006 pg 48



BLING
S1006 pg 48



BLING
Z1006 pg 48



BLING
1007 pg 48



BLING
S1007 pg 48



BLING
Z1007 pg 48



REAL SIMPLE
1807 pg 64



REAL SIMPLE
Z1817 pg 64



REAL SIMPLE
1827 pg 64



REAL SIMPLE
1837 pg 64



JULIET
1974 pg 73



JULIET
D1974 pg 73



RICO ESPINET CASPIAN
D2003 pg 142



RICO ESPINET CASPIAN
D2008 pg 142



RICO ESPINET CASPIAN
Z2008 pg 142



RICO ESPINET CASPIAN
D2009 pg 142

Index | Chandeliers



RICO ESPINET CASPIAN
Z2009 pg 142



RICO ESPINET CANDELARIA
B2090 pg 148



RICO ESPINET CANDELARIA
S2090 pg 148



RICO ESPINET CANDELARIA
Z2090 pg 148



RICO ESPINET CANDELARIA
B2091 pg 148



RICO ESPINET CANDELARIA
S2091 pg 148



RICO ESPINET CANDELARIA
Z2091 pg 148



RICO ESPINET CANDELARIA
B2099 pg 148



RICO ESPINET CANDELARIA
S2099 pg 148



RICO ESPINET CANDELARIA
Z2099 pg 148



RICO ESPINET CANDELARIA
B2102 pg 148



RICO ESPINET CANDELARIA
S2102 pg 148



RICO ESPINET CANDELARIA
Z2102 pg 148



RICO ESPINET CASPIAN
D2103 pg 142



RICO ESPINET CASPIAN
Z2103 pg 142



RICO ESPINET SAWYER
P2112 pg 152



RICO ESPINET SAWYER
Z2112 pg 152



RICO ESPINET CASPIAN
Z2113 pg 142



AXIS
2128 pg 76



AXIS
D2128 pg 76



SATURNIA
S2155 pg 86



SATURNIA
Z2155 pg 86



ECHO
S2156 pg 83



ECHO
Z2156 pg 83



PETRIOLO
S2167 pg 80



PETRIOLO
Z2167 pg 80



PETRIOLO
S2168 pg 80



PETRIOLO
Z2168 pg 80



ECHO
Z2178 pg 82



ECHO
S2188 pg 82



SATURNIA
Z2188 pg 85



SATURNIA
S2198 pg 85



WESLEY
2355 pg 89



WESLEY
S2355 pg 89



THE MUSES
3317 pg 111



GOSSAMER
3367 pg 119



LATITUDE
3376 pg 120



LATITUDE
D3376 pg 120



DELANY
4500 pg 125



DELANY
S4500 pg 125

Index | Chandeliers



DELANY
Z4500 pg 125



DELANY
4501 pg 125



DELANY
S4501 pg 125



DELANY
Z4501 pg 125



ARTWORK
ART01 pg 130



ARTWORK
ART02 pg 130

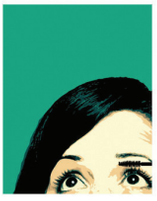

ARTWORK
ART05 pg 130

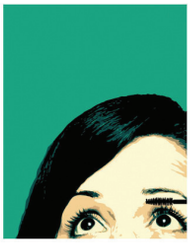

ARTWORK
ART06 pg 130



ARTWORK
ART07 pg 130

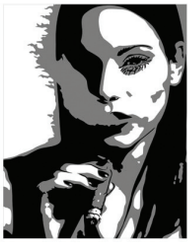

ARTWORK
ART08 pg 130



ARTWORK
ART09 pg 130



ARTWORK
ART10 pg 130



ARTWORK
ART11 pg 130



ARTWORK
ART12 pg 130



ARTWORK
ART13 pg 130



ARTWORK
ART14 pg 130



ARTWORK
ART15 pg 130



ARTWORK
ART16 pg 130



ARTWORK
ART17 pg 130

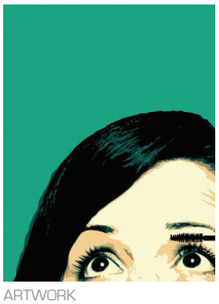

ARTWORK
ART19 pg 130



ARTWORK
ART20 pg 130



ARTWORK
ART21 pg 130



ARTWORK
ART22 pg 130



ARTWORK
ART23 pg 130

Index | Accessories



ARTWORK
ART24 pg 130



ARTWORK
ART37 pg 130



ARTWORK
ART38 pg 130



ARTWORK
ART39 pg 130



ARTWORK
ART40 pg 130

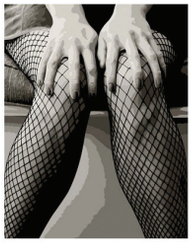

ARTWORK
ART41 pg 130

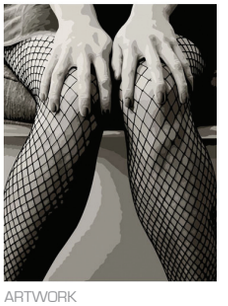

ARTWORK
ART42 pg 130



ARTWORK
ART43 pg 130

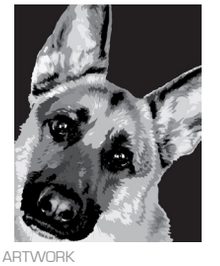

ARTWORK
ART44 pg 130



ARTWORK
ART45 pg 130



ARTWORK
ART46 pg 130



ARTWORK
ART47 pg 130



ARTWORK
ART48 pg 130



BULBS
BUL01 pg 202



BULBS
BUL06 pg 202



BULBS
BUL09 pg 202



BULBS
BUL12 pg 202



BULBS
BUL18 pg 202



BULBS
BUL30 pg 202



BULBS
HIS01 pg 202



BULBS
HIS02 pg 202



JONATHAN ADLER MEURICE
S656 pg 157



JONATHAN ADLER MEURICE
658 pg 157



JONATHAN ADLER MEURICE
S658 pg 157



JONATHAN ADLER MEURICE
659 pg 157



JONATHAN ADLER MEURICE
S659 pg 157



JONATHAN ADLER BRISTOL
707 pg 172



JONATHAN ADLER BRISTOL
S707 pg 172



JONATHAN ADLER MAYFAIR
712 pg 174



JONATHAN ADLER MAYFAIR
S712 pg 174



JONATHAN ADLER OJAI
784 pg 183



JONATHAN ADLER OJAI
S784 pg 183



DOUGHNUT
S909 pg 5



DOUGHNUT
Z909 pg 5

Index

ART BY MICHELLE OXENBERG
ART01 130 287
ART02 130 287
ART05 130 287
ART06 130 287
ART07 130 287
ART08 130 287
ART09 130 287
ART10 130 287
ART11 130 287
ART12 130 287
ART13 130 287
ART14 130 287
ART15 130 287
ART16 130 287
ART17 130 287
ART19 130 287
ART20 130 287
ART21 130 287
ART22 130 287
ART23 130 287
ART24 130 288
ART37 130 288
ART38 130 288
ART39 130 288
ART40 130 288
ART41 130 288
ART42 130 288
ART43 130 288
ART44 130 288
ART45 130 288
ART46 130 288
ART47 130 288
ART48 130 288

BULBS
BUL01 202 288
HIS01 202 288
HIS02 202 288
BUL06 202 288
BUL09 202 288
BUL12 202 288
BUL18 202 288
BUL30 202 288

DOUBLE GOURD
CF23X 16 211

TRIPLE GOURD
EG31X 15 211
RR42X 15 211

JONATHAN ADLER MEURICE
53LS 161 272
53SN 161 272
53ST 161 272
S53LS 161 272
S53SN 161 272
S53ST 161 272
Z53LS 161 272
Z53SN 161 272
Z53ST 161 272
57LS 161 272
57SN 161 272
57ST 161 272
S57LS 161 272
S57SN 161 272
S57ST 161 272
Z57LS 161 272
Z57SN 161 272
Z57ST 161 272

DOUGHTNUT
100XBN 1 211
101XAS 1 211
102XBZ 1 211
103XBN 1 211
104XAS 1 211
105XBZ 1 211
106X 2 240
107X 2 240
108X 2 240
109X 4 253
110X 4 253
111X 4 253

RICO ESPINET PLATO
120 131 211
S120 131 211
121 131 240
S121 131 240

TIC-TAC-TOE
123 6 211
125 6 211
127 6 211

DOUGHNUT
139 2 268
S139 2 268
Z139 2 268
141 3 211
142 3 211
147 3 240
148 3 240
149 3 240
S149 3 240
Z149 3 240
S152 2 268
Z152 2 268

CRISPIN
Z153 7 211

ELENA
B167 8 272
K167 8 272
W167 8 273
B168 8 273
K168 8 273
W168 8 273
B169 8 273
K169 8 273
W169 8 273

DAVE
170 9 211
172 9 211

CRICKET
173 9 211
D173 9 212
S173 9 212
Z173 9 212

ABBEY BRONZE
L180X 10 240
L180 10 240
L181X 10 240
L181 10 240

DOUGHNUT
182 4 253
183 4 253
184 4 253
185 4 253

JAYNE
210BL 11 212
210BR 11 212
210RE 11 212
210X 11 212
210 11 212
211BR 11 212
211RE 11 212
211X 11 212
211 11 212
212BL 11 212
212BR 11 212
212X 11 212
212 11 212
213BL 11 212
213RE 11 212
213X 11 212
213 11 212

SHAOLIN
214 12 213
215 12 213

ARIEL
222 12 213
223 12 213

MILLBROOK
BL225 13 273
BL226 13 273
BL227 13 273

EDGAR
230 12 213
231 12 213

MERCURY DOUBLE GOURD
235 14 213
235B 14 213
236 14 213
236B 14 213

RICO ESPINET BUSTER GLOBE
240 132 213
S240 132 213
Z240 132 213
241 132 213
S241 132 213
Z241 132 213
242 132 240
S242 132 241
Z242 132 241
243 132 273
S243 132 273
Z243 132 273
244 132 281
S244 132 281
Z244 132 281

RICO ESPINET TYLER GLOBE
245 133 281
S245 133 281
Z245 133 281

RICO ESPINET SCOUT
246 134 213
S246 134 213
247 134 241
S247 134 241

SEINE
280 17 213
S280 17 213
Z280 17 214
281 17 214
S281 17 214
Z281 17 214
282 17 241
S282 17 241
Z282 17 241

TRIPLE GOURD
A282X 15 214

WILLIAMSBURG MING
300 189 214
S300 189 214
301 189 241
S301 189 241

WILLIAMSBURG TUCKER
302 190 214
S302 190 214

WILLIAMSBURG NELSON
305 191 214

WILLIAMSBURG DUNMORE
310 192 214
310B 192 214
311 192 214
311B 192 214

WILLIAMSBURG WYTHE
312 193 214
312B 193 214

WILLIAMSBURG TAYLOE
315 194 273
316 194 273
317 194 273
318 194 273
325 194 253
326 194 253

WILLIAMSBURG CUSTIS
WB330 195 273
WB331 195 273
WB332 195 273
WB333 195 274
WB334 195 274
WB335 195 274
WB336 195 274
WB337 195 274
WB338 195 274
WB339 195 274

WILLIAMSBURG BLAIKLEY
B340 196 253
C340 196 253
S340 196 253
Z340 196 253
B341 196 253
C341 196 253
S341 196 253
Z341 196 253
B342 196 253
C342 196 253
S342 196 253
Z342 196 254

WILLIAMSBURG WENTWORTH
345 197 214
S345 197 214
346 197 241
S346 197 241

BANDIT
S347 18 214
Z347 18 214
S348 18 241
Z348 18 241
S349 18 254
Z349 18 254

WILLIAMSBURG LIGHTFOOT
350 198 254
S350 198 254
Z350 198 254
351 198 254
S351 198 254
Z351 198 254
352 198 254
S352 198 254
Z352 198 254
353 198 254
S353 198 254
Z353 198 254
354 198 254
S354 198 254
Z354 198 254
355 198 254
S355 198 254
Z355 198 255

TRIPLE GOURD
A368X 15 215

WILLIAMSBURG DICKINSON
S370 199 255
Z370 199 255
S371 199 268
Z371 199 268
Z372 199 215
Z373 199 215

TRIPLE GOURD
378X 15 215

ABBEY BRONZE
L385 10 215
L385X 10 215
L386 10 215
L386X 10 215

MEILLEUR
407 19 255
D407 19 255
Z407 19 255
412 19 255
D412 19 255
Z412 19 255
S427X 20 255
Z427X 20 255
S428X 20 265
Z428X 20 265
S429X 20 265
Z429X 20 265

WAVY
434 21 215
435 21 215
436 21 215

HELENA AL FRESCO
JV450 34 215
WZ450 34 215

FREYA AL FRESCO
JV451 34 215
WZ451 34 215

BRONTE AL FRESCO
JV452 34 215
WZ452 34 215

PHOEBE AL FRESCO
JV453 34 215
WZ453 34 215

Index

KOLEMAN
460 ... 22 ... 215
S460 ... 22 ... 216
Z460 ... 22 ... 216
461 ... 22 ... 241
S461 ... 22 ... 241
Z461 ... 22 ... 242
462 ... 23 ... 216
S462 ... 23 ... 216
Z462 ... 23 ... 216
463 ... 23 ... 242
S463 ... 23 ... 242
Z463 ... 23 ... 242
464 ... 23 ... 265
S464 ... 23 ... 265
Z464 ... 23 ... 265

BEEHIVE
D616 ... 24 ... 274
N616 ... 24 ... 274
S616 ... 24 ... 274
Z616 ... 24 ... 274

JONATHAN ADLER PARKER
639 ... 163 ... 255
S639 ... 163 ... 255
Z639 ... 163 ... 255

JONATHAN ADLER MEURICE
647 ... 157 ... 242
S647 ... 157 ... 242
Z647 ... 157 ... 242
649B ... 155 ... 216
649 ... 155 ... 216
S649X ... 155 ... 216
S649 ... 155 ... 216
Z649B ... 155 ... 216
Z649 ... 155 ... 216
651B ... 155 ... 242
651 ... 155 ... 242
S651X ... 155 ... 242
S651 ... 155 ... 242
S652X ... 155 ... 242
S652 ... 155 ... 242
653 ... 156 ... 274
S653 ... 156 ... 274
Z653 ... 156 ... 274
654 ... 156 ... 281
S654 ... 156 ... 281
Z654 ... 156 ... 281
S656 ... 157 ... 289
657 ... 156 ... 274
S657 ... 156 ... 274
Z657 ... 156 ... 274
658 ... 157 ... 289
S658 ... 157 ... 289
659 ... 157 ... 289
S659 ... 157 ... 289

JONATHAN ADLER PARKER
S660 ... 162 ... 216
662 ... 163 ... 255
S662 ... 163 ... 255
Z662 ... 163 ... 255
663 ... 163 ... 274
S663 ... 163 ... 274
Z663 ... 163 ... 274
664 ... 163 ... 268
S664 ... 163 ... 268
Z664 ... 163 ... 268
667 ... 163 ... 255
S667 ... 163 ... 255
S668 ... 162 ... 242
Z668 ... 162 ... 242
S669 ... 162 ... 216
Z669 ... 162 ... 216

JONATHAN ADLER VENTANA
670 ... 165 ... 216
PN670 ... 165 ... 216
671 ... 165 ... 243
PN671 ... 165 ... 243
672 ... 165 ... 255
PN672 ... 165 ... 256
673 ... 166 ... 281
PN673 ... 166 ... 281
674 ... 166 ... 281
PN674 ... 166 ... 281

JONATHAN ADLER CLARIDGE
676B ... 168 ... 216
676 ... 168 ... 216
677B ... 168 ... 216
677 ... 168 ... 216
678B ... 168 ... 217
678 ... 168 ... 217
679B ... 168 ... 217
679 ... 168 ... 217
684B ... 168 ... 217
684 ... 168 ... 217

JONATHAN ADLER VENTANA
685 ... 166 ... 281
PN685 ... 166 ... 281

JONATHAN ADLER MEURICE
686 ... 158 ... 256
S686 ... 158 ... 256
Z686 ... 158 ... 256
687 ... 158 ... 281
S687 ... 158 ... 281
Z687 ... 158 ... 281
688 ... 159 ... 256
S688 ... 159 ... 256
Z688 ... 159 ... 256
689 ... 159 ... 268
S689 ... 159 ... 268
Z689 ... 159 ... 268

JONATHAN ADLER HAVANA
W691 ... 169 ... 217
W692 ... 169 ... 243
W693 ... 169 ... 275
W694 ... 169 ... 275
W695 ... 170 ... 265
W696 ... 170 ... 243
W697 ... 170 ... 256
W698 ... 170 ... 256

JONATHAN ADLER IPANEMA
S699 ... 171 ... 275
S700 ... 171 ... 281
S701 ... 171 ... 243

DELILAH
EG701 ... 25 ... 217
MB701 ... 25 ... 217
PM701 ... 25 ... 217
RR701 ... 25 ... 217

JONATHAN ADLER BRISTOL
706 ... 172 ... 243
S706 ... 172 ... 243
707 ... 172 ... 289
S707 ... 172 ... 289
708 ... 172 ... 217
S708 ... 172 ... 217

JONATHAN ADLER HAVANA
W708 ... 169 ... 256
W709 ... 169 ... 281

JONATHAN ADLER SPUTNIK
710 ... 173 ... 282
S710 ... 173 ... 282
711 ... 173 ... 256
711 ... 173 ... 268
S711 ... 173 ... 256
S711 ... 173 ... 268

JONATHAN ADLER MAYFAIR
712 ... 174 ... 289
S712 ... 174 ... 289

JONATHAN ADLER SPUTNIK
713 ... 173 ... 275
S713 ... 173 ... 275
714 ... 173 ... 282
S714 ... 173 ... 282

JONATHAN ADLER VENTANA
718 ... 167 ... 282
PN718 ... 167 ... 282

JONATHAN ADLER CERAMIC
730L ... 175 ... 256
730R ... 175 ... 256

JONATHAN ADLER CAPRI
BG730 ... 176 ... 217
BL730 ... 176 ... 217
OR730 ... 176 ... 217
WH730 ... 176 ... 217

JONATHAN ADLER CERAMIC
731 ... 175 ... 256
732 ... 175 ... 256

JONATHAN ADLER CAPRI
BG732 ... 176 ... 217
BL732 ... 176 ... 217
OR732 ... 176 ... 217
WH732 ... 176 ... 218
BG734 ... 176 ... 275
BL734 ... 176 ... 275
OR734 ... 176 ... 275
WH734 ... 176 ... 275
BG735 ... 176 ... 256
BL735 ... 176 ... 256
OR735 ... 176 ... 256
WH735 ... 176 ... 256
BG736 ... 176 ... 218
BL736 ... 176 ... 218
OR736 ... 176 ... 218
WH736 ... 176 ... 218
BG737 ... 176 ... 218
BL737 ... 176 ... 218
OR737 ... 176 ... 218
WH737 ... 176 ... 218
BG738 ... 176 ... 218
BL738 ... 176 ... 218
OR738 ... 176 ... 218
WH738 176 218
WH739 ... 177 ... 275

ALBERT
P745 ... 26 ... 257
S745 ... 26 ... 257
Z745 ... 26 ... 257
P746 ... 26 ... 275
S746 ... 26 ... 275
Z746 ... 26 ... 275
P747 ... 27 ... 218
Z747 ... 27 ... 218
P748 ... 27 ... 243
Z748 ... 27 ... 243
P749 ... 27 ... 265
Z749 ... 27 ... 265
P750 ... 26 ... 243
Z750 ... 26 ... 243

JONATHAN ADLER MILANO
755 ... 178 ... 282
S755 ... 178 ... 282

JONATHAN ADLER MEURICE
S760 ... 160 ... 257
Z760 ... 160 ... 257
S761 ... 160 ... 257
Z761 ... 160 ... 257
S762 ... 160 ... 257
Z762 ... 160 ... 257

JONATHAN ADLER ANTWERP
765 ... 179 ... 218
S765 ... 179 ... 218
766 ... 179 ... 243
S766 ... 179 ... 243
768 ... 179 ... 275
S768 ... 179 ... 275

DOUBLE GOURD
A770X ... 16 ... 218

JONATHAN ADLER VENTANA
771 ... 167 ... 257
PN771 ... 167 ... 257

JONATHAN ADLER RIO
777 ... 180 ... 257
S777 ... 180 ... 257
Z777 ... 180 ... 257
779 ... 180 ... 275
S779 ... 180 ... 275
Z779 ... 180 ... 275

JONATHAN ADLER OJAI
781 ... 183 ... 218
S781 ... 183 ... 218
782 ... 183 ... 243
S782 ... 183 ... 243
783 ... 183 ... 275
S783 ... 183 ... 275
784 ... 183 ... 289
S784 ... 183 ... 289
785 ... 183 ... 257
S785 ... 183 ... 257

JONATHAN ADLER HARLEQUIN
786 ... 184 ... 219
S78 ... 184 ... 219
787 ... 184 ... 244
S787 ... 184 ... 244

JONATHAN ADLER RIO
790 ... 181 ... 282
S790 ... 181 ... 282
Z790 ... 181 ... 282
791 ... 182 ... 282
S791 ... 182 ... 282
Z791 ... 182 ... 282

JONATHAN ADLER CANAAN
795 ... 185 ... 219
795X ... 185 ... 219
796 ... 185 ... 219
796X ... 185 ... 219

DOLLY
800 ... 28 ... 219
G800B ... 28 ... 219
G800 ... 28 ... 219
801 ... 28 ... 219
G801B ... 28 ... 219
G801 ... 28 ... 219

JONATHAN ADLER ST. GERMAIN
805 ... 186 ... 219
BK805 ... 186 ... 219
S805 ... 186 ... 219
806 ... 186 ... 219
BK806 ... 186 ... 219
S806 ... 186 ... 219
807 ... 186 ... 244
BK807 ... 186 ... 244
S807 ... 186 ... 244

PENELOPE
A808 ... 29 ... 276
B808 ... 29 ... 276
F808 ... 29 ... 276
N808 ... 29 ... 276
O808 ... 29 ... 276
R808 ... 29 ... 276
S808 ... 29 ... 276
T808 ... 29 ... 276
W808 ... 29 ... 276
A809 ... 30 ... 219
B809 ... 30 ... 219
F809 ... 30 ... 220
N809 ... 30 ... 220
O809 ... 30 ... 220
R809 ... 30 ... 220
S809 ... 30 ... 220
T809 ... 30 ... 220
W809 ... 30 ... 220
A810 ... 30 ... 220
B810 ... 30 ... 220
F810 ... 30 ... 220
N810 ... 30 ... 220
O810 ... 30 ... 220
R810 ... 30 ... 220
S810 ... 30 ... 220
T810 ... 30 ... 220
W810 ... 30 ... 220

RICO ESPINET CHURCHILL
811 ... 135 ... 257
D811 ... 135 ... 257
812 ... 135 ... 276
D812 ... 135 ... 276
813 ... 135 ... 276
D813 ... 135 ... 276
814 ... 135 ... 220
D814 ... 135 ... 220
815 ... 135 ... 244
D815 ... 135 ... 244
816 ... 135 ... 257
D816 ... 135 ... 257

RICO ESPINET ADIRONDACK
824 ... 136 ... 220

OLIVER
828 ... 31 ... 220
829 ... 31 ... 265

OREN
830 ... 32 ... 221

Index

HELENA
831 ... 33 ... 221
832X ... 33 ... 221
832 ... 33 ... 221
833 ... 33 ... 221

BRONTE
837C ... 33 ... 221
837 ... 33 ... 221
838X ... 33 ... 221
838 ... 33 ... 221
839 ... 33 ... 221

ASTER
840X ... 35 ... 221

JONATHAN ADLER BARCELONA
BK840 ... 187 ... 221
GN840 ... 187 ... 221
LA840 ... 187 ... 221
RB840 ... 187 ... 221
WH840 ... 187 ... 221
BK841 ... 187 ... 221
GN841 ... 187 ... 221
LA841 ... 187 ... 221
RB841 ... 187 ... 221
WH841 ... 187 ... 222
BK842 ... 187 ... 244
GN842 ... 187 ... 244
LA842 ... 187 ... 244
RB842 ... 187 ... 244
WH842 ... 187 ... 244

FREYA
845 ... 33 ... 222
846X ... 33 ... 222
846 ... 33 ... 222
847 ... 33 ... 222

WARWICK
860 ... 36 ... 276
S860 ... 36 ... 276
861 ... 36 ... 276
S861 ... 36 ... 276
862 ... 36 ... 258
S862 ... 36 ... 258

MAGELLAN
863 ... 37 ... 222
S863 ... 37 ... 222
864 ... 37 ... 244
S864 ... 37 ... 244

JONATHAN ADLER VIENNA
865 ... 188 ... 282
S865 ... 188 ... 282
866 ... 188 ... 282
S866 ... 188 ... 282

PHOEBE
870C ... 33 ... 222
870 ... 33 ... 222
871X ... 33 ... 222
871 ... 33 ... 222
872 ... 33 ... 222

JONATHAN ADLER BRISTOL
875 ... 172 ... 222
S875 ... 172 ... 222

AIDEN
880 ... 38 ... 222
S880 ... 38 ... 222
881 ... 38 ... 222
S881 ... 38 ... 222
882 ... 38 ... 244
S882 ... 38 ... 245
883 ... 38 ... 245
S883 ... 38 ... 245
884 ... 38 ... 258
S884 ... 38 ... 258
885 ... 38 ... 258
S885 ... 38 ... 258

ANNA
890 ... 39 ... 222
891 ... 39 ... 222
892 ... 39 ... 223
893 ... 39 ... 245
894 ... 39 ... 223

DOUGHTNUT
S909 ... 5 ... 289
Z909 ... 5 ... 289

DELTA
935 ... 40 ... 223
941 ... 40 ... 223
942 ... 40 ... 223

FRANCESCO
950 ... 41 ... 223
S950 ... 41 ... 223
951 ... 41 ... 245
S951 ... 41 ... 245

MASON
CF960 ... 40 ... 223
962 ... 40 ... 223
964 ... 40 ... 223

AUDREY
LY980 ... 42 ... 223
MB980 ... 42 ... 223
MR980 ... 42 ... 223
PC980 ... 42 ... 223
ST980 ... 42 ... 223

HARVEY
AM990 ... 43 ... 223
AP990 ... 43 ... 223
EG990 ... 43 ... 223

JUNE
LY991 ... 44 ... 223
ST991 ... 44 ... 223

ATHENA
CI992 ... 45 ... 224
CR992 ... 45 ... 224
EG992 ... 45 ... 224
PC992 ... 45 ... 224

JUNE
BN993 ... 44 ... 224
CL993 ... 44 ... 224

PIKE
ST994 ... 46 ... 224
SU994 ... 46 ... 224
TE994 ... 46 ... 224

HARVEY
MB995 ... 43 ... 224
ST995 ... 43 ... 224

PIKE
CI996 ... 46 ... 224
PC996 ... 46 ... 224

WILLIAMSBURG RANDOLPH
BW997 ... 200 ... 224
CG997 ... 200 ... 224
CP997 ... 200 ... 224
DB997 ... 200 ... 224
LB997 ... 200 ... 224
MT997 ... 200 ... 224
PG997 ... 200 ... 224
BW998 ... 200 ... 225
CG998 ... 200 ... 225
CP998 ... 200 ... 225
DB998 ... 200 ... 225
LB998 ... 200 ... 225
MT998 ... 200 ... 225
PG998 ... 200 ... 225

BLING
1000 ... 47 ... 282
S1000 ... 47 ... 282
Z1000 ... 47 ... 283
1001 ... 47 ... 258
S1001 ... 47 ... 258
Z1001 ... 47 ... 258
1002 ... 47 ... 268
S1002 ... 47 ... 268
Z1002 ... 47 ... 268
1004 ... 48 ... 283
S1004 ... 48 ... 283
Z1004 ... 48 ... 283
1005 ... 47 ... 225
S1005 ... 47 ... 225
Z1005 ... 47 ... 225
1006 ... 48 ... 283
S1006 ... 48 ... 283
Z1006 ... 48 ... 283
1007 ... 48 ... 283
S1007 ... 48 ... 283
Z1007 ... 48 ... 283

ANENOME
S1305 ... 49 ... 258
S1305 ... 49 ... 268
S1306 ... 49 ... 258
S1306 ... 49 ... 268

TYRONE
B1310 ... 50 ... 258
C1310 ... 50 ... 258
S1310 ... 50 ... 258
Z1310 ... 50 ... 258

RODERICK
B1311 ... 51 ... 258
C1311 ... 51 ... 258
S1311 ... 51 ... 258
Z1311 ... 51 ... 258
B1314 ... 52 ... 269
C1314 ... 52 ... 269
S1314 ... 52 ... 269
Z1314 ... 52 ... 269
B1315 ... 51 ... 258
C1315 ... 51 ... 259
S1315 ... 51 ... 259
Z1315 ... 51 ... 259
B1316 ... 52 ... 269
C1316 ... 52 ... 269
S1316 ... 52 ... 269
Z1316 ... 52 ... 269
B1317 ... 52 ... 269
C1317 ... 52 ... 269
S1317 ... 52 ... 269
Z1317 ... 52 ... 269

BRYCE
1318 ... 53 ... 259
B1318 ... 53 ... 259
C1318 ... 53 ... 259
S1318 ... 53 ... 259
Z1318 ... 53 ... 259
1319 ... 53 ... 269
B1319 ... 53 ... 269
C1319 ... 53 ... 269
S1319 ... 53 ... 269
Z1319 ... 53 ... 269

HALO
1324 ... 54 ... 259
B1324 ... 54 ... 259
C1324 ... 54 ... 259
1325 ... 54 ... 259
B1325 ... 54 ... 259
C1325 ... 54 ... 259

BRADLEY
C1333 ... 55 ... 259
S1333 ... 55 ... 259
Z1333 ... 55 ... 259
C1334 ... 55 ... 259
S1334 ... 55 ... 259
Z1334 ... 55 ... 259
C1335 ... 55 ... 260
S1335 ... 55 ... 260
Z1335 ... 55 ... 260
C1338 ... 55 ... 269
S1338 ... 55 ... 269
Z1338 ... 55 ... 269
C1339 ... 55 ... 270
S1339 ... 55 ... 270
Z1339 ... 55 ... 270

KINETIC
1500 ... 56 ... 225
B1500BRC ... 56 ... 225
P1500 ... 56 ... 225
Z1500DBZ ... 56 ... 225
Z1502ALT ... 56 ... 225
Z1502DBZ ... 56 ... 225
Z1502XXX ... 56 ... 225
1503ALT ... 56 ... 225
1503X ... 56 ... 225
1503 ... 56 ... 225
B1503ALT ... 56 ... 226
B1503BRC ... 56 ... 226
B1503XXX ... 56 ... 226
Z1503ALT ... 56 ... 226
Z1503DBZ ... 56 ... 226
Z1503XXX ... 56 ... 226
1504ALT ... 56 ... 265
1504X ... 56 ... 265
1504 ... 56 ... 265
B1504ALT ... 56 ... 265
B1504BRC ... 56 ... 265
B1504XXX ... 56 ... 265
Z1504ALT ... 56 ... 265
Z1504DBZ ... 56 ... 265
Z1504XXX ... 56 ... 265
1505 ... 56 ... 245
B1505BRC ... 56 ... 245
P1505 ... 56 ... 245
Z1505DBZ ... 56 ... 245

JACKSON
1510 ... 57 ... 226
D1510 ... 57 ... 226
Z1510 ... 57 ... 226
1511 ... 57 ... 245
D1511 ... 57 ... 245
Z1511 ... 57 ... 245

FINEAS
1513 ... 58 ... 226
1514 ... 58 ... 226
1515 ... 58 ... 226
1516 ... 58 ... 226

WILMA
1517B ... 59 ... 226
1517 ... 59 ... 226

ADDISON
1540B ... 60 ... 226
1540 ... 60 ... 226
1541B ... 60 ... 226
1541 ... 60 ... 226
1542 ... 60 ... 260
1543 ... 60 ... 270
1544 ... 60 ... 276
1545 ... 60 ... 270

ASTRO
1553 ... 61 ... 226

IRIS
1561 ... 62 ... 227
S1561 ... 62 ... 227
Z1561 ... 62 ... 227
1562 ... 62 ... 245
S1562 ... 62 ... 245
Z1562 ... 62 ... 246
1563 ... 62 ... 260
S1563 ... 62 ... 260
Z1563 ... 62 ... 260
1564 ... 62 ... 266
S1564 ... 62 ... 266
Z1564 ... 62 ... 266

APOLLO
S1566 ... 63 ... 246
S1567 ... 63 ... 276

ADDISON
1570B ... 60 ... 227
1570 ... 60 ... 227
1571B ... 60 ... 227
1571 ... 60 ... 227
1572 ... 60 ... 260
1573 ... 60 ... 270
1574 ... 60 ... 276
1575 ... 60 ... 270

RICO ESPINET OLINDA
1578B ... 137 ... 227
1578W ... 137 ... 227
1579B ... 137 ... 227
1579W ... 137 ... 227
1580B ... 137 ... 227
1580W ... 137 ... 227
1581B ... 137 ... 227
1581W ... 137 ... 227

APOLLO
S1580 ... 63 ... 227
S1581 ... 63 ... 260
S1582 ... 63 ... 277

RICO ESPINET TATU
1585 ... 138 ... 227
1586 ... 138 ... 227

RICO ESPINET MARINA
1590 ... 139 ... 227
1591 ... 139 ... 227

RICO ESPINET LUA VESSEL
1595 ... 140 ... 228
1596 ... 140 ... 228

DOUBLE GOURD
1617 16 228
1673 16 228
1772X 16 228
REAL SIMPLE
1802 65 228
1803 65 228
1804 65 246
1805 65 246
1806 64 266
1807 64 283
1809 64 266
Z1812 65 228
Z1813 65 228
Z1814 65 246
Z1815 65 246
Z1816 64 266
Z1817 64 283
Z1819 64 266
1822 65 228
1823 65 228
1824 65 246
1825 65 246
1826 64 266
1827 64 283
1829 64 266
1832 65 228
1833 65 228
1834 65 246
1835 65 246
1836 64 266
1837 64 283
1839 64 266
BRUNO
1840 66 228
W1840 66 228
1841W 67 228
1841X 67 228
1841 67 228
1842W 67 246
1842X 67 246
1842 67 246
1847 66 246
W1847 66 246
1848 66 247
W1848 66 247
1849 66 266
W1849 66 266
ANT BEE
1862 68 228
A1862 68 228
P1862 68 229
1863 68 247
A1863 68 247
P1863 68 247
1864 68 266
1873 68 247
1874 68 266
A1874 68 266
P1874 68 266
1894 68 277
P1894 68 277
Z1894 68 277
ALVIN
1900 69 229
S1900 69 229
Z1900 69 229
Z1901 70 229
Z1902 70 247
Z1903 70 247
1905 69 247
S1905 69 247
Z1905 69 247
Z1906 70 247
Z1908 70 266
PORTER
1909 71 260
S1909 71 260
1910 71 229
S1910 71 229
1911 71 247
S1911 71 247
1912 71 277
S1912 71 277
JONATHAN ADLER PARKER
1945 164 229
S1945 164 229
Z1945 164 229
1946 164 260
S1946 164 260
Z1946 164 260
1947 164 270
S1947 164 270
Z1947 164 270
SLOAN
1957B 72 229
1957 72 229
1958B 72 229
1958 72 229
IRIS
1963 62 277
S1963 62 277
Z1963 62 277
JULIET
1970 73 229
D1970 73 229
1971 73 229
D1971 73 229
1972 73 247
D1972 73 248
1973 73 260
D1973 73 260
1974 73 283
D1974 73 283
CHASE
1985 74 270
D1985 74 270
S1985 74 270
Z1985 74 270
1986 74 260
D1986 74 260
S1986 74 260
Z1986 74 260
1987 74 261
D1987 74 261
S1987 74 261
Z1987 74 261
1988 74 261
D1988 74 261
S1988 74 261
Z1988 74 261
RICO ESPINET CASPIAN
D2003 142 283
D2004 142 261
RICO ESPINET NOVA
2005 141 277
S2005 141 277
Z2005 141 277
RICO ESPINET CASPIAN
D2008 142 283
Z2008 142 283
D2009 142 283
Z2009 142 284
RICO ESPINET MARINA
2024 139 277
RICO ESPINET NINA
2040 144 229
2043 144 270
Z2043 144 270
RICO ESPINET OVO
2044 145 229
Z2044 145 230
2045 145 248
Z2045 145 248
RICO ESPINET BUSTER
2055W 146 277
2055 146 277
Z2055 146 277
2056W 147 230
2056 147 230
2057W 146 248
2057 146 248
Z2057 146 248
RICO ESPINET NINA
2058 144 270
Z2058 144 270
2068 146 248
Z2068 146 248
2069 144 230
Z2069 144 230
RICO ESPINET BUSTER CHICA
2080W 146 248
2080 146 248
2081 146 248
2082W 147 230
2082 147 230
2083 147 230
RICO ESPINET CANDELARIA
B2090 148 284
S2090 148 284
Z2090 148 284
B2091 148 284
S2091 148 284
Z2091 148 284
RICO ESPINET MILES
B2096 149 230
Z2096 149 230
B2097 149 248
Z2097 149 248
B2098 149 266
Z2098 149 266
RICO ESPINET CANDELARIA
B2099 148 284
S2099 148 284
Z2099 148 284
RICO ESPINET CANDELA
B2100 150 230
Z2100 150 230
B2101 150 248
Z2101 150 248
RICO ESPINET CANDELARIA
B2102 148 284
S2102 148 284
Z2102 148 284
RICO ESPINET CASPIAN
D2103 142 284
Z2103 142 284
D2104 142 261
Z2104 142 261
RICO ESPINET SAWYER
P2110 151 249
Z2110 151 249
P2111 151 230
Z2111 151 230
P2112 152 284
Z2112 152 284
RICO ESPINET CASPIAN
Z2113 142 284
Z2114 142 261
RICO ESPINET VAUX
2115 153 261
2116 153 277
RICO ESPINET CASPIAN
D2117 143 261
Z2117 143 261
D2118 143 261
S2118 143 261
Z2118 143 261
AXIS
2128 76 284
D2128 76 284
2129 76 277
D2129 76 277
2130 75 230
D2130 75 230
2131 75 249
D2131 75 249
2132 75 249
D2132 75 249
2133 75 230
D2133 75 230
2134 77 277
D2134 77 278
2135 77 278
D2135 77 278
2136 77 261
D2136 77 261
2137 77 262
D2137 77 262
2138 77 262
D2138 77 262
2139 77 270
D2139 77 270
SATURNIA
S2155 86 285
Z2155 86 285
ECHO
S2156 83 285
Z2156 83 285
LUCY
D2160 78 230
Z2160 78 230
D2161 78 231
Z2161 78 231
D2162 78 249
Z2162 78 249
D2163 79 262
Z2163 79 262
D2164 79 278
Z2164 79 278
D2165 79 278
Z2165 79 278
PETRIOLO
S2167 80 285
Z2167 80 285
S2168 80 285
Z2168 80 285
S2169 80 262
Z2169 80 262
RICO ESPINET SHINTO
2170 154 231
2171 154 249
ECHO
Z2170 81 231
Z2171 81 249
Z2172 82 262
Z2174 81 231
Z2175 81 231
Z2176 82 278
Z2178 82 285
Z2179 82 278
S2180 81 231
S2181 81 249
S2182 82 262
S2184 81 231
S2185 81 231
S2186 82 278
S2188 82 285
S2189 82 278
SATURNIA
Z2180 84 231
Z2181 84 249
Z2182 85 262
Z2183 85 278
Z2184 84 231
Z2185 84 231
Z2186 85 278
Z2187 85 271
Z2188 85 285
S2190 84 231
S2191 84 249
S2192 85 262
S2193 85 278
S2194 84 231
S2195 84 231
S2196 85 278
S2197 85 271
S2198 85 285
LOGAN
2257B 87 231
2257 87 231
2258B 87 249
2258 87 249
2295B 87 231
2295 87 231
ARCHER
S2286 88 250

Index

WESLEY
2355 89 285
S2355 89 285
MARY MCDONALD REGINE
2420 90 231
2421 90 232
ZOLTAR
2430 91 232
S2430 91 232
2431 91 250
S2431 91 250
2432 91 262
S2432 91 262
2433 91 278
S2433 91 278
MARY MCDONALD ANNIKA
2500X 92 232
2500 92 232
2501X 92 232
2501 92 232
2502X 92 232
2502 92 232
2503X 92 232
2503 92 232
2504X 92 232
2504 92 232
2505X 92 232
2505 92 232
2506X 92 232
2506 92 232
2507X 92 232
2507 92 232
MARY MCDONALD ONDINE
2513B 93 262
2513R 93 262
2513 93 262
2514B 93 262
2514R 93 262
2514 93 262
2515B 93 233
2515T 93 233
2515 93 232
2516B 93 233
2516T 93 233
2516 93 233
2517B 93 250
2517T 93 250
2517 93 250
2518B 93 263
2518T 93 263
2518 93 263
2519B 93 263
2519T 93 263
2519 93 263
MARY MCDONALD LEOPOLD
2530X 94 233
2530 94 233
2531X 94 263
2531 94 263
MARY MCDONALD CYLINDRICUS
2540B 95 233
2540 95 233
Z2540 95 233
2541 95 263
Z2541 95 263
MARY MCDONALD FIRENZE
2546B 96 233
2546 96 233
MARY MCDONALD EMPIRE
B2547 97 233
E2547 97 233
G2547 97 233
MARY MCDONALD DIRECTOIRE
2550B 98 233
2550 98 233
2551 98 263
2552 98 271
2553 98 271
2554B 98 263
2554 98 263
2555B 98 267
2555 98 267
2561X 98 263
2562X 98 271
2563X 98 271
2565 98 267
MARY MCDONALD SPENCE
2570 99 233
2571 99 250
2572 99 263
2573 99 267
MARY MCDONALD BAUDELAIRE
2585 100 233
S2585 100 233
2586 100 250
S2586 100 250
MARY MCDONALD SANTORINI
2590 101 234
2591 101 234
2592 101 234
2593 101 234
MARY MCDONALD BAUDELAIRE
2595 100 234
S2595 100 234
2596 100 250
S2596 100 250
MARY MCDONALD ANNIKA
2600X 92 234
2600 92 234
2601X 92 234
2601 92 234
2602X 92 234
2602 92 234
2603X 92 234
2603 92 234
2604X 92 234
2604 92 234
2605X 92 234
2605 92 234
WILTON
2606X 102 250
2606 102 250
2607X 102 250
2607 102 250
2609CLP 102 234
2609X 102 234
MARY MCDONALD DIRECTOIRE
2654 98 263
MARY MCDONALD PYTHAGORAS
2670 103 235
S2670 103 235
2671 103 263
S2671 103 263
2672 103 278
S2672 103 278
BINARY
2703 104 263
EDWIN
2740 105 235
S2740 105 235
2741 105 251
S2741 105 251
2742 105 278
S2742 105 279
2743 105 263
S2743 105 264
LOGAN
2791B 87 235
2791 87 235
2792B 87 235
2792 87 235
2793B 87 251
2793 87 251
RICO ESPINET BUSTER
2800W 147 235
2800 147 235
2801W 146 251
2801 146 251
2802W 146 279
2802 146 279
RICO ESPINET BUSTER CHICA
2803W 147 235
2803 147 235
2804W 146 251
2804 146 251
TRENTON
2810 106 235
2811 106 279
2812 106 264
SOFIA
2820 107 235
D2820 107 235
Z2820 107 235
2821 107 235
D2821 107 235
Z2821 107 235
2822 107 251
D2822 107 251
Z2822 107 251
2823 107 251
D2823 107 251
Z2823 107 251
2824 107 267
D2824 107 267
Z2824 107 267
MAX
S2850 108 235
Z2850 108 236
S2851 108 251
Z2851 108 252
COLONNADE
S2855 109 236
Z2855 109 236
S2856 109 252
Z2856 109 252
S2857 109 264
Z2857 109 264
VENUS & JUNO
3306 110 236
3307 110 236
THE MUSES
3314 111 264
3315 111 236
3316 111 252
3317 111 285
ANDRE
D3318 112 236
Z3318 112 236
D3320 112 252
Z3320 112 252
WELLS
D3319 112 236
GLASS HARRIET
3323 113 236
B3323 113 236
M3323 113 236
T3323 113 236
W3323 113 236
ARTEMIS
3324B 114 236
3324W 114 236
3324 114 236
WILLIAMSBURG LUDWELL
3325 201 236
3326 201 236
ARTEMIS
3329B 114 237
3329W 114 237
3329 114 236
COLE
S3336 115 279
S3337 115 279
BLAKE
3338 116 279
S3338 116 279
Z3338 116 279
KATE
3340B 118 237
3340W 118 237
3341B 118 237
3341W 118 237
3342B 118 237
3342W 118 237
3350B 118 237
3350W 118 237
3351B 118 237
3351W 118 237
3352B 118 237
3352W 118 237
BLAKE
3360 116 279
S3360 116 279
Z3360 116 279
3361 116 279
S3361 116 279
Z3361 116 279
3362 116 279
S3362 116 279
Z3362 116 279
3363 117 271
S3363 117 271
Z3363 117 271
3364 117 264
S3364 117 264
Z3364 117 264
GOSSAMER
3367 119 285
3368 119 264
3369 119 237
3370 119 237
LATITUDE
3371 120 237
D3371 120 237
3372 120 237
D3372 120 237
3373 121 279
D3373 121 279
3374 120 264
D3374 120 264
3375 121 264
D3375 121 264
3376 120 285
D3376 120 285
3377 121 238
D3377 121 238
ALICE
3380 122 238
S3380 122 238
3381 122 264
S3381 122 264
3382 122 264
S3382 122 264
AXIOM
3390 123 280
B3390 123 280
S3390 123 280
WONTON
4237 124 267
S4237 124 267
4238 124 264
S4238 124 264
DELANY
4500 125 285
S4500 125 285
Z4500 125 286
4501 125 286
S4501 125 286
Z4501 125 286
MONROE
5000 126 238
S5000 126 238
Z5000 126 238
5001 126 238
S5001 126 238
Z5001 126 238
5002 126 252
S5002 126 252
Z5002 126 252
BEAUX ARTS
9824BRN 127 252
9856 127 238
9856X 127 238
9857 127 238
9857X 127 238
9866 127 238
9866B 127 238
9867 127 238
9867B 127 238
LAURELTON
9890 128 238

FOUNDRY
9938COP.....129.....238
9938KCOP.....129.....239
9938KRST.....129.....239
9938XRST.....129.....239
9939BCOP.....129.....239
9939COP.....129.....239
9939KCOP.....129.....239
9939KRST.....129.....239
9939XRST.....129.....239

Terms & Conditions

Our acceptance of any order is made conditional on the buyer's agreement to the terms and conditions as stated herein.

Terms

- Pro forma invoices are available. The order will be entered and scheduled for production upon receipt of funds.
- Open account terms are net 30 days from date of invoice (no cash or anticipation discounts).
- Slow payments delay shipments.
- We do not ship C.O.D. under any circumstances.
- Must maintain a minimum annual volume to remain an active account an receive wholesale pricing.

Ordering

- A minimum opening order is required to establish an account. Please check with your local representative.
- Clearly mark "confirmation do not duplicate" on orders previously called or faxed to prevent duplication.
- Unless otherwise stated, all back orders will be cancelled.
- Custom items meeting minimums will require a 50% deposit.

Quick Ship

- Robert Abbey has a Quick Ship program of items that can ship within 5 -7 business days after order date (based upon stock availability). Because of the short turnaround time, any **Quick Ship order cancellation requests must be made in writing within 24 hours of order placement**. Quick Ship items are designated on the Abbey price list.

Rush Orders

- We offer an expedited production service on small quantities of lighting (2 pieces maximum) for **RUSH orders** on Non-Quick Ship items. If we have the components, we can produce and ship the items within the 5 -7 business day lead time, with payment of a **$50 expedited production fee** for each 2 pieces. This service applies to small rush orders only.

Shipping & Handling

- All shipments are F.O.B. Factory Hickory, North Carolina.
- All freight is sent freight collect, and is never prepaid.
- Seller assumes no responsibility for damage in transit.
- Most UPS and Federal Express Ground shipments are sent prepaid and added to the customer's invoice. There may be exceptions.
- Robert Abbey charges an additional $25 drop ship fee on any order that is shipping to an address other than the **normal account delivery address**. The drop ship fee does not apply to shipments sent to a regular third party warehouse on record.

Routing

- Robert Abbey will ship best and cheapest unless otherwise directed.

Cancellations

- Orders already in production may not be cancelled.
- All cancellations must be submitted in writing via fax or e-mail.

Deductions

- No deductions allowed without prior authorization from Robert Abbey.

Exchanges & Returns

- Robert Abbey will only accept returns on defective merchandise. We must be notified within 365 days of shipment date.

Damages

- All damages must be reported within 30 days of delivery. If not, we are not able to file a claim and send a replacement.



Photograph by
Savvy Interiors, San Diego


THE ROOSEVELTS
GEOFFREY C. WARD and KEN BURNS
KNOPF
MICHELANGELO
Lucinda Hawkins Collinge
& Annabel Ricketts
Brompton



FACTORY & GENERAL OFFICE
3166 Main Avenue S.E.
Hickory, NC 28602
(828) 322-3480 Fax (828) 328-1037
www.robertabbey.com

PERMANENT SHOWROOMS
High Point, NC W244
Dallas, TX WTC 305-1
Las Vegas, NV A427